EROWA®

General Catalog

Unlocking the full potential of your machines



Welcome to EROWA

In the service of your productivity since 1971

Set up in 1971, EROWA AG is now a globally operating organization for the development, production, consultation and distribution of state-of-the-art manufacturing technology in tool- and mold-making, as well as production and precision mechanics. In its main areas of activity, clamping technology and automation, EROWA is among the world's leaders.

EROWA's headquarters are based in Büron in Central Switzerland. With its 11 subsidiaries, 22 representations and worldwide customer service, the company currently employs about 550 staff.

Our extremely high degree of manufacturing know-how, our engineering competence and our rigorous service focus are the driving forces of EROWA's mission: to increase productivity and to satisfy customers.





At EROWA, «Empowering Your Production» has been our mission since the very beginning. Every solution we offer is grounded in our own hands-on manufacturing experience, ensuring that we address the real challenges our customers face daily. With over 50 years of expertise, we know that efficiency, precision, and reliability are the cornerstones of successful production.

Our tooling systems and automation solutions are developed with one goal in mind: to help you achieve consistent results with exceptional repeatability. They are built to last, offering a product lifecycle that sets them apart in the market.



When you choose EROWA, you're not only investing in a high-quality Swiss product, but also in a trusted partner dedicated to ensuring seamless integration with virtually all machine tools and technologies.

Since 1987, EROWA's integrative thinking has driven innovation in robotics and process control systems. This spirit of progress continues to lead the way, shaping the future of Industry 4.0. For decades, our commitment to empowering your production has remained steadfast, providing solutions that adapt to your needs and ensure your success in an ever-evolving industry.

With intelligently interlinked systems toward the Smart Factory





Collaborating with EROWA means entering a new era of manufacturing efficiency. With the JMS 4.0 process control system, you can take full control of your workflows, reduce machine downtimes, and enhance process security. EROWA empowers your production with intelligent tools that optimize every aspect of your manufacturing operations.

Achieve Automation Excellence
EROWA takes your manufacturing to the next level with increased productivity, quality, and flexibility. The JMS 4.0 system ensures seamless automation and real-time data management, giving you complete control over your production in a digitalized world.

Future-Proof Your Investment
Our solutions deliver long-term reliability and adaptability. EROWA systems are independent of specific machine tools, allowing you to remain flexible and expand your smart factory as your needs evolve.

Seamless Integration
With consistent data flow from CAD/CAM to ERP, paperless production becomes a reality. Real-time insights and robust interfaces ensure precise planning and control for maximum efficiency.

With EROWA, your production is smarter, more flexible, and ready for the future.

Discover Smart Factory:
erowa.com/en/smartfactory

EMPOWERING
YOUR PRODUCTION

At EROWA, we believe in going beyond expectations to ensure your manufacturing processes are efficient, reliable, and future-ready. With our innovative solutions, we empower your production every step of the way - delivering flexibility, precision, and unmatched productivity.

Flexible Manufacturing Concept:
For over 30 years, our Flexible Manufacturing Concept (FMC) has redefined productivity in the manufacturing industry. By continually advancing process control and software solutions, we've positioned FMC as the foundation of the Smart Factory and aligned it with the principles of Industry 4.0.

Our systems are so versatile that one-off part production can be seamlessly automated. Whether it's minimizing machine downtime or enhancing workflows, EROWA ensures your manufacturing process operates at peak performance.

Your Trusted Partner for Individual Manufacturing Solutions
From initial ideas to system implementation, we provide investment security and long-term support that far exceed industry standards. Our commitment doesn't end with installation. With robust maintenance concepts and unparalleled customer support, we ensure your production systems remain efficient, reliable, and adaptable.

When you choose EROWA, you choose more than a supplier - you choose a partner for sustainable manufacturing success.





Precision Without Compromise
For decades, EROWA has set the standard for precision in tool and mold-making. Our solutions are trusted worldwide for applications such as injection molds, bending tools, and sintering technology.

With a focus on zero-error tolerance, EROWA empowers your production to achieve micron-level accuracy. This eliminates rejects and ensures the highest value for your investment, even in the most demanding manufacturing environments.

Stability and Flexibility Across Industries
From aviation to medical technology, automotive to micromechanics, EROWA solutions are designed to handle every batch size and challenge. Our robust components withstand immense machining forces, guaranteeing process security - even for oversized workpieces.

Unexpected orders or last-minute modifications? With EROWA's standardization solutions, resetting times are shortened, and efficiency is enhanced, giving you the flexibility to adapt without missing a beat.

More Than a Supplier - Your Partner in Manufacturing Excellence
At EROWA, «Empowering Your Production» means helping you reach new levels of productivity, precision, and efficiency. Whatever your manufacturing challenges, we're here to help you solve them - with solutions designed to exceed expectations.

If you're ready to take your production to the next level, EROWA is the partner you can rely on.





Optimal utilization of resources

The suitable EROWA components will enable you to make optimal use of your machines.
We'll be glad to assist you with our many years of experience.
You call - we'll show up.

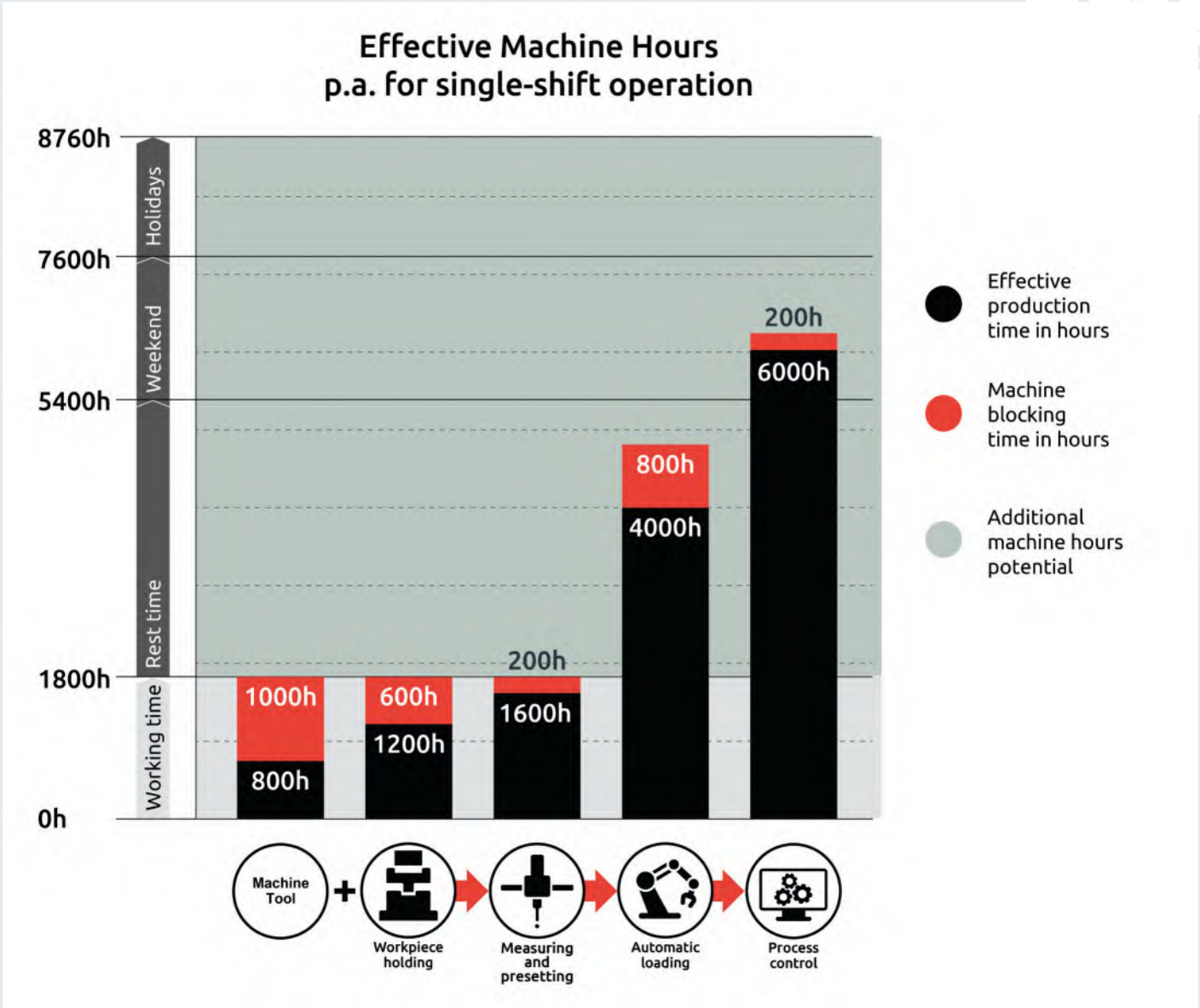

How to find everything

STANDARDIZATION

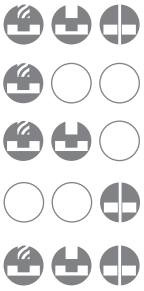

EROWA TOOLING SYSTEMS

Overview 13

Tooling systems for production and precision mechanics 14

Tooling systems for EDM, tool- and mold-making 196

Tooling systems for WEDM 284

Tooling systems for powder presses 328

ORGANIZATION

EROWA QUALITY MEASURING AND PRESETTING SYSTEMS

Overview 347

AUTOMATION

EROWA LOADING SYSTEMS

Overview 379

INTEGRATION

EROWA PROCESS CONTROL SYSTEM

Overview 423

To digital production in just a few steps 424

EROWA JMS 4.0 process control system 426

Index 432

Contact addresses 437

This is how the General Catalog works

1. Manual operation
2. Operate with compressed air jet
3. Operate with manual valve
4. Operate with manual control unit
5. Operate with electro-pneumatic control unit
6. With central flushing clearance
7. Suited for submerged operation
8. Corrosion-resistant material
9. Suited for automatic operation
10. Handling with EROWA Robot gripper S
11. Handling with EROWA Robot gripper Combi
12. Handling with EROWA Robot gripper C
13. Handling with EROWA Robot gripper 72
14. Handling with EROWA Robot gripper 115
15. Handling with EROWA Robot gripper 148
16. Handling with EROWA Robot gripper RN PC 210
17. Handling with EROWA Robot gripper RCS
18. Handling with EROWA Robot gripper WGS-500

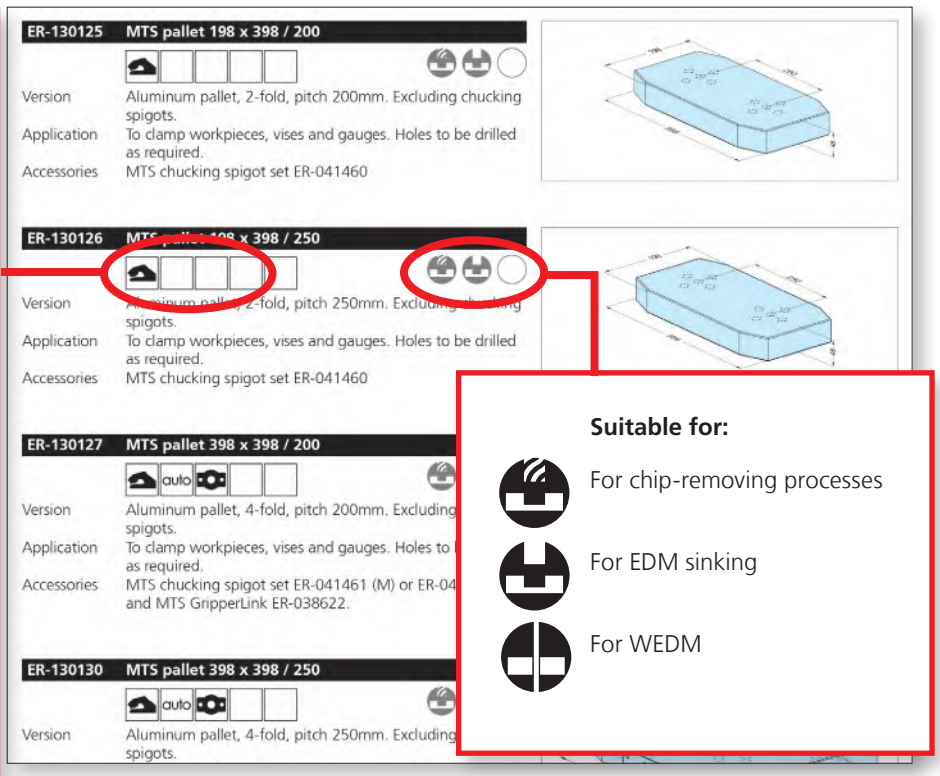

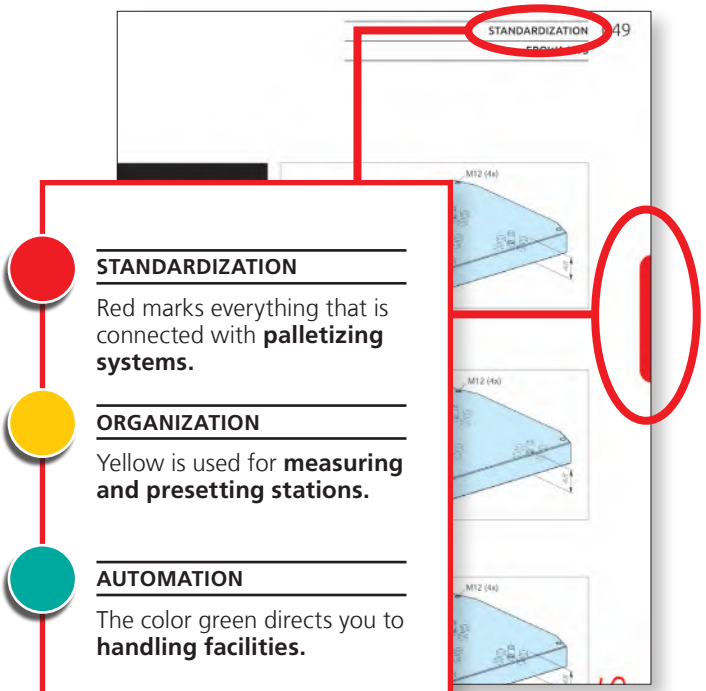

To make it easier for you to find your bearings among all the applications of EROWA products, we use the following icons in all our documents:

QUICK SEARCH

The quick search on the first inside page leads you to the beginning of the various product areas.

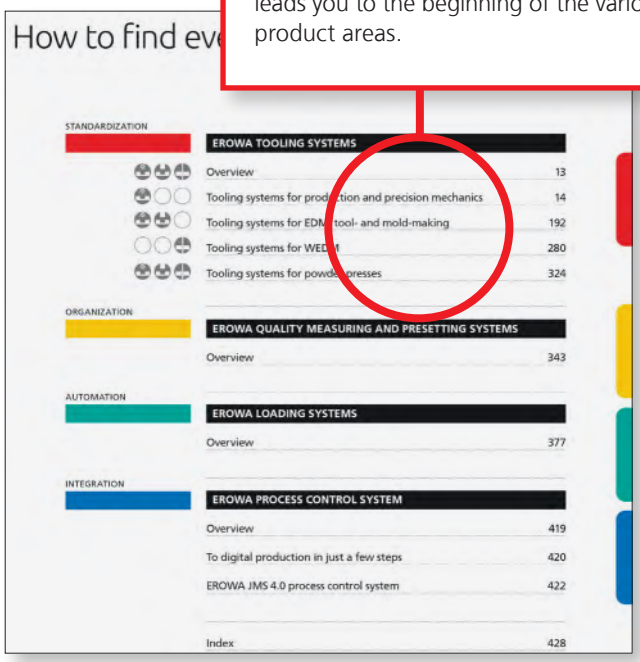

DETAILED OVERVIEW

The detailed overview that precedes each product area leads you to the relevant product families such as the ITS or the WEDM tooling system.

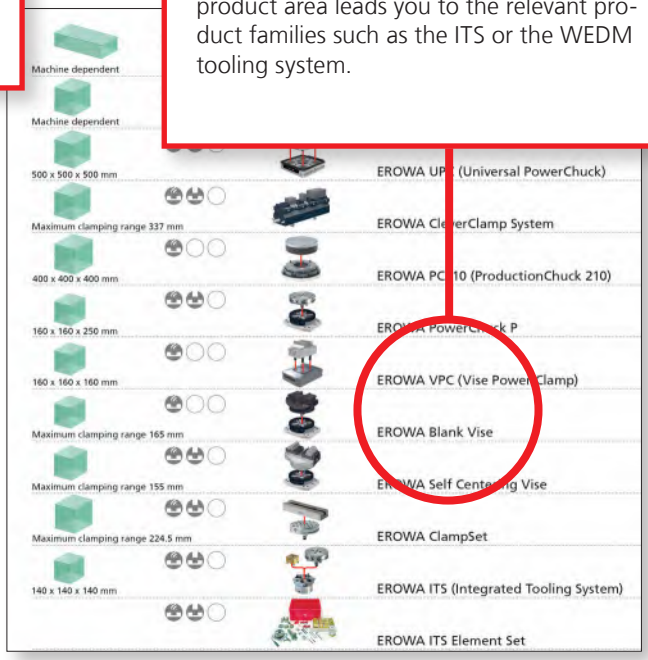

OVERVIEW TABLES

The overview tables that precede the chapters on presetting stations and handling facilities provide you with a quick overview of the properties of the various products.

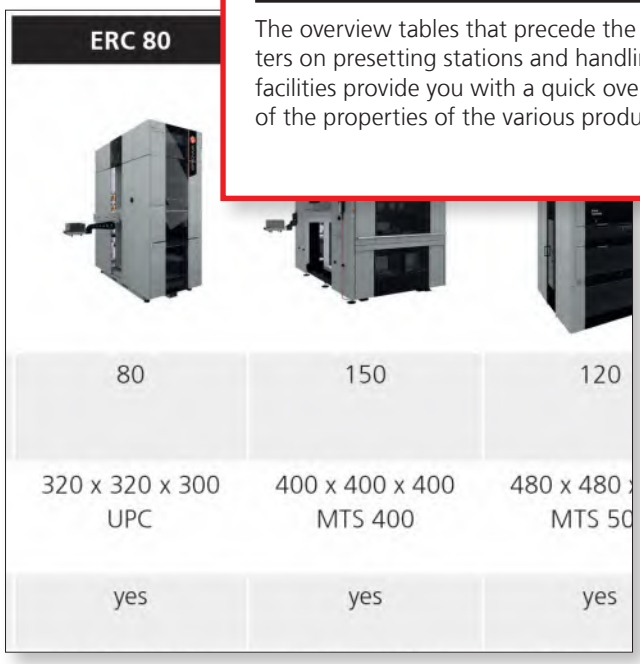

EROWA Tooling systems

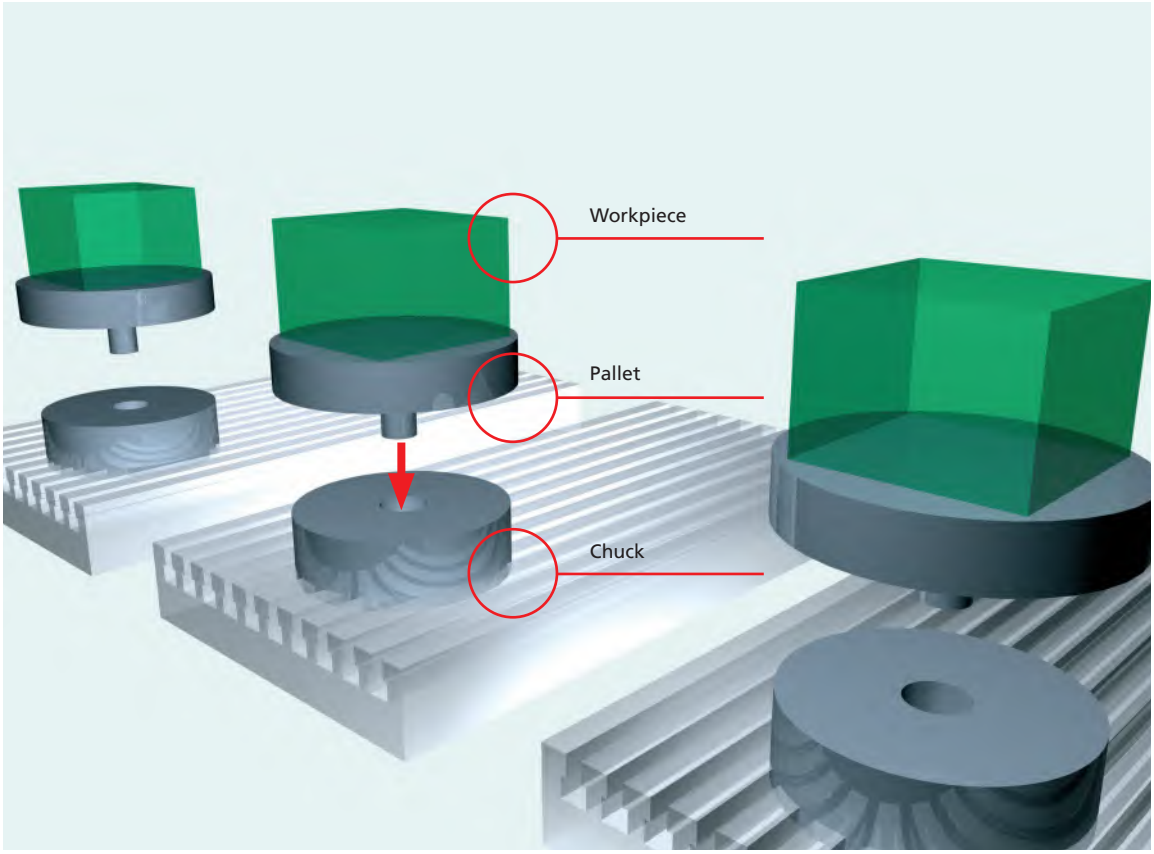

EROWA Tooling systems

Standardization of mechanical interfaces. The integration of a universal tooling system on all machine tools will significantly reduce any downtimes.

For chip-removing processes

For EDM sinking

For WEDM

EROWA TOOLING SYSTEMS

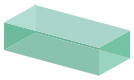
Machine dependent





EROWA GTS (Giant Tooling System) 14


Machine dependent



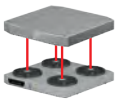

EROWA MTS (Modular Tooling System) 26


500 x 500 x 500 mm





EROWA UPC (Universal PowerChuck) 80


Maximum clamping range 337 mm





EROWA CleverClamp System 96


400 x 400 x 400 mm





EROWA PC210 (ProductionChuck 210) 118


160 x 160 x 250 mm





EROWA PowerChuck P 132


160 x 160 x 160 mm





EROWA VPC (Vise Power Clamp) 152


Maximum clamping range 165 mm





EROWA Blank Vise 162


Maximum clamping range 155 mm





EROWA Self Centering Vise 172


Maximum clamping range 224.5 mm





EROWA ClampSet 184


140 x 140 x 140 mm





EROWA ITS (Integrated Tooling System) 196





EROWA ITS Element Set 248


50 x 50 x 50 mm



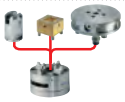

EROWA ITS Compact Combi 254



EROWA ITS Auxiliary Equipment 278

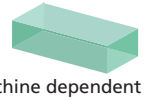
Machine dependent

EROWA Wire EDM Tooling 284

Machine dependent

EROWA PM Tooling (Powder Metallurgy) 328

Machine dependent

EROWA Spindle Adaptation 340

EROWA GTS

For large and heavy workpieces

A zero-point clamping system enables fast and precise workpiece changeovers while reducing setup and machine downtime. Workpieces are positioned accurately and clamped securely within seconds.

The patented EROWA Giant Tooling System (GTS) has been specifically developed for large and heavy workpieces in rotary applications. It combines precision, stability and process reliability for heavy-duty machining. Its robust geometry is ideally suited to automated manufacturing processes as well as the production of large workpieces with crane loading. Standardized setup processes reduce machine downtime and increase productivity.

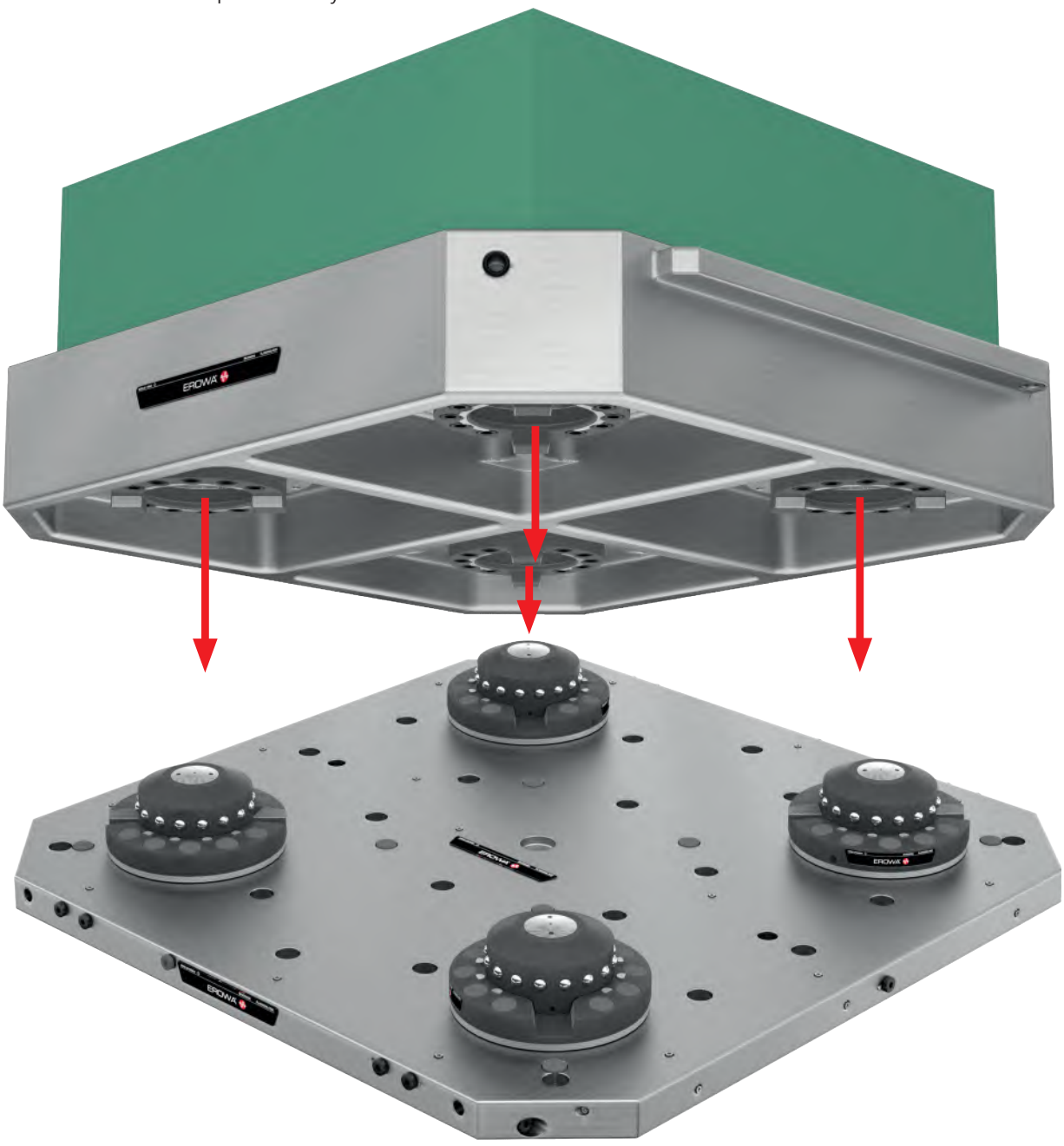

Applications

Handling

Manual / Loading facility / Robot

Function

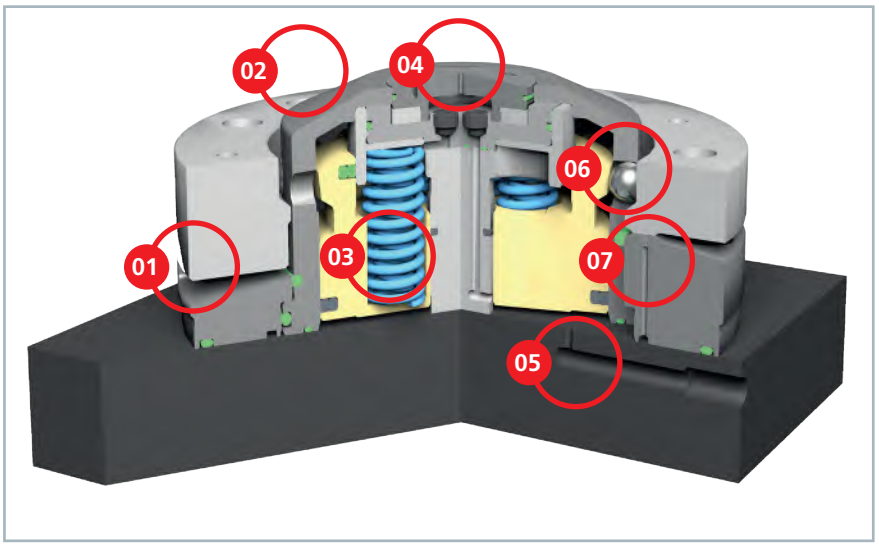

01 | Precise Centering
Wide centering profiles ensure stability and precision with high alternating loads. The clamping mechanism compensates for linear expansion.

02 | Design
Optimized design prevents tilting and enables ideal pre-centering.

03 | Power Package
Springs and hydraulics deliver 80 kN clamping force, reduce vibrations and improve production quality.

04 | Soft landing and lifting function
Gentle lowering and lifting protects the precision areas, reduces wear and extends the service life.

05 | Control
The hydraulic control guarantees correct locking and opening.

06 | Ball lock
Large balls and a self-locking mechanism ensure the clamping force even without pressure.

07 | Cleaning Function
The integrated compressed-air cleaning function protects the Z support surfaces from contamination.

Technical data - GTS Giant Tooling System

	GTS Giant Tooling System
Clamping power	80.000 N per chuck
Repeatability	< 0.003 mm
Recommended workpiece size	from 500 x 500 x 500 mm
Workpiece weight	up to 1.500 kg per chuck
Clamping	spring power (clamped without pressure)
Opening pressure	60 bar hydraulic
Reclamping pressure	60 bar hydraulic
Cleaning and presence detection	6 bar pneumatic

Control types

Manual
- Operator-guided
- Simple and flexible
- For single parts and crane loading

Automated
- Robot- or machine-controlled
- Presence and open-status monitoring
- For automated manufacturing

Automated with monitoring
- Machine-controlled
- Locking and open-status monitoring
- Enhanced Securityw

EROWA GTS in use

Process-safe, reliable & efficient

The GTS adapts flexibly to different manufacturing concepts – from manual operation to fully monitored automation. Thanks to its modular design, the number of chucks can be individually adapted to the workpiece and process requirements.

Clamped without hydraulic pressure, monitored and cleaned – for high process reliability and machine availability. The thermally compensating clamping technology ensures precise positioning even under temperature fluctuations.

FACTS

- Modular clamping system
- Securely clamped without pressure
- Thermally compensated
- Tolerant centering geometry
- For rotary applications
- Reliably monitored
- Automation-ready

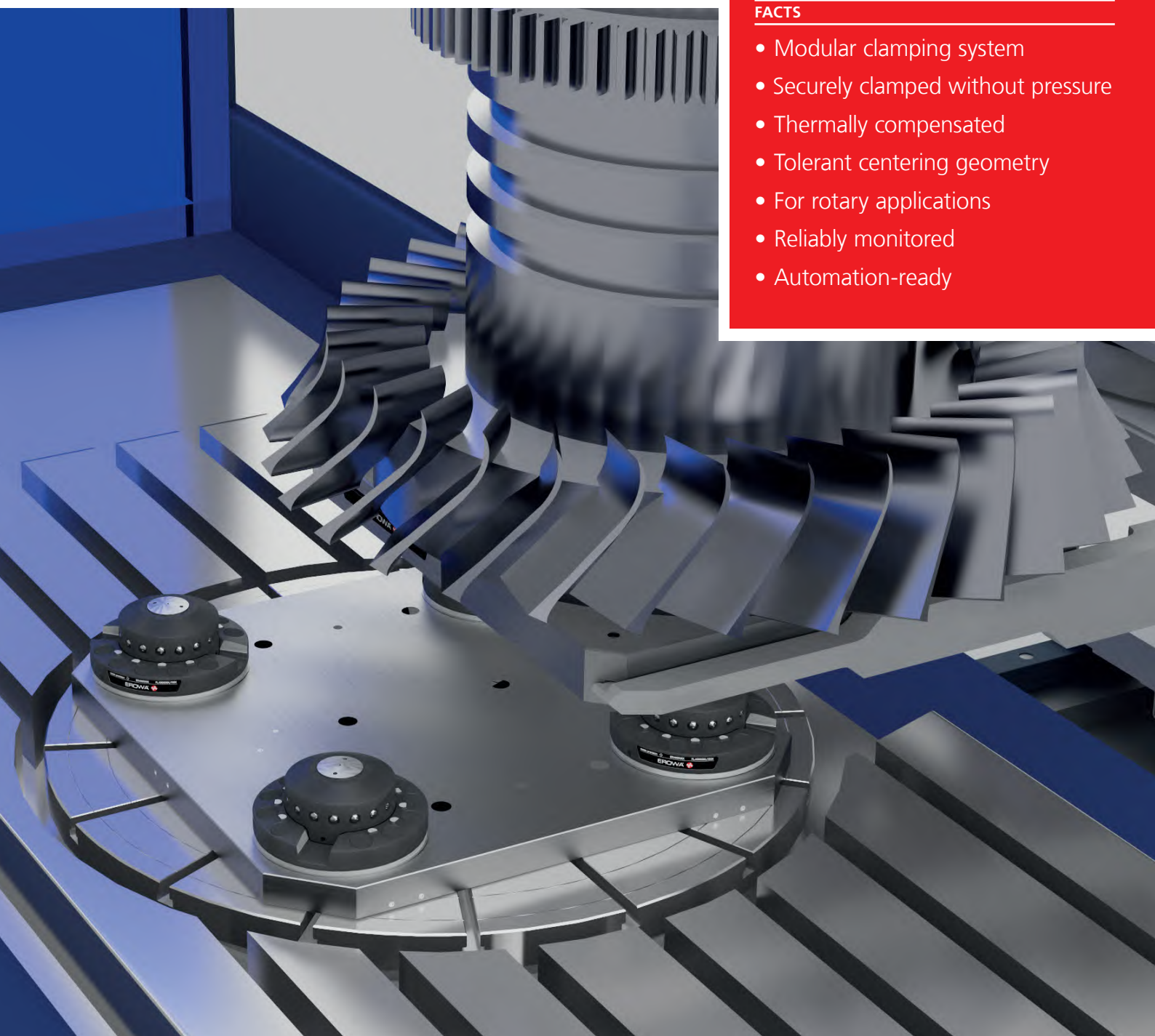



Precise, stable and process-reliable – the GTS for demanding machining tasks involving large workpieces.



Workpieces, fixtures and pallets are positioned with repeatable accuracy. Setup times and machine downtime are minimized.

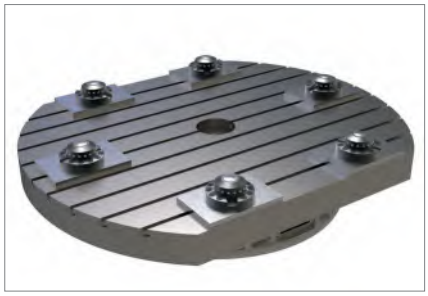

Flexible arrangement of the GTS chucks to suit workpiece size, machine geometry and process requirements.



80 kN clamping force per chuck for stable and reliable machining processes.



Self-locking clamping mechanism for high process reliability even if there's a loss in hydraulic pressure.

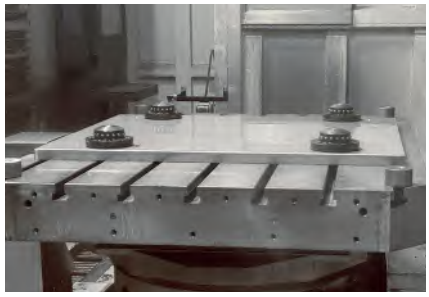

Compensating clamping technology for repeatable results despite temperature fluctuations.



Locking and open-status monitoring, combined with a cleaning function, ensure reliable automated manufacturing.

EROWA GTS

The components



ER-155002



ER-155004

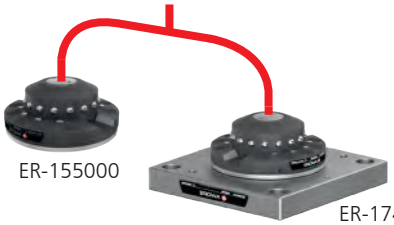

ER-155000

ER-174100

Note:
Modular configuration with 4 or more GTS chucks for customized clamping concepts.



ER-176817

ER-180781



ER-178455

ER-180780



ER-175175

ER-175113



ER-176091



ER-179044
ER-179045

To make it easier for you to find your way about the fields of application for EROWA products, we use the following symbols in all our documents:

1. Manual operation
2. Operate with compressed air jet
3. Operate with manual valve
4. Operate with manual control unit
5. Operate with electro-pneumatic control unit
6. With central flushing clearance
7. Suited for submerged operation
8. Corrosion-resistant material
9. Suited for automatic operation
10. Handling with EROWA Robot gripper S
11. Handling with EROWA Robot gripper Combi
12. Handling with EROWA Robot gripper C
13. Handling with EROWA Robot gripper 72
14. Handling with EROWA Robot gripper 115
15. Handling with EROWA Robot gripper 148
16. Handling with EROWA Robot gripper RN PC 210
17. Handling with EROWA Robot gripper RCS
18. Handling with EROWA Robot gripper WGS-500

EROWA GTS

GTS	Chuck	20
GTS	Base plates	20
GTS	Pallets	22
GTS	Clamping ring	24
GTS	Accessories	24

For chip-removing processes

For EDM sinking

For WEDM

EROWA GTS

Chuck

Technical Data	GTS Giant Tooling System
Clamping force	80,000 N per chuck
Repeatability	< 0.003 mm
Recommended workpiece size	from 500 x 500 x 500 mm
Workpiece weight	up to 1,500 kg per chuck
Clamping	spring power (clamped without pressure)
Opening pressure	60 bar hydraulic
Reclamping pressure	60 bar hydraulic
Cleaning and presence detection	6 bar pneumatic

more Info: GTS

ER-155000 GTS Chuck

auto

Description	Hydraulic zero-point chuck for high machining forces in heavy-duty machining as well as for milling and mill-turn applications.
Application	For holding GTS pallets, workpiece carriers and machine pallets.
Function	Self-locking clamping mechanism with thermally compensating clamping technology.
Special feature	Soft-landing and lift-off function to protect the precision surfaces.
Scope of delivery	Includes M12 fastening screws and Ø 6 mm positioning pins.
Note	Designed to meet safety requirements in accordance with ISO 13849 PL d Cat. 3.

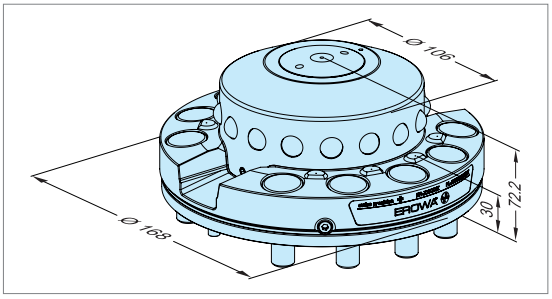

EROWA GTS

Base plates

ER-174100 GTS base plate 250 x 250 1-fold

auto

Description	Single base plate with mounted GTS chuck for modular setups.
Application	For holding GTS pallets, workpiece carriers and machine pallets.
Actuation	Lateral connections for simple plumbing to the machine table.
Installation	Mounting hole pattern with a hole spacing of 200 mm, M16.
Note	Designed to meet safety requirements in accordance with ISO 13849 PL d Cat. 3.

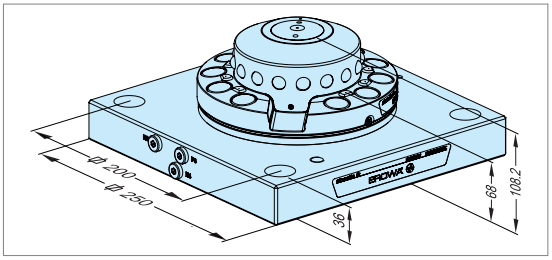

EROWA GTS

Base plates

ER-175113 GTS Base plate 600 x 600 Universal, pitch 320

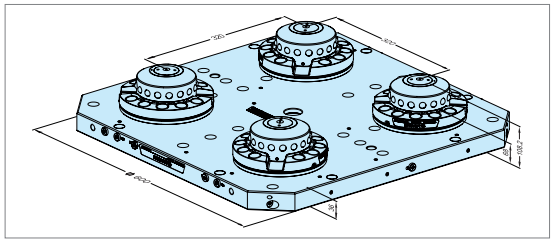

Description	4-fold base plate with mounted GTS chucks.
Application	For holding GTS pallets, workpiece carriers and machine pallets.
Actuation	From below via adapter flange with Ø 57 mm pitch circle or via lateral connections for simple plumbing. Additional adapters on request.
Installation	Mounting hole pattern for machine tables with 63 mm T-slot spacing and for star-slot tables, M12.
Note	Designed to meet safety requirements in accordance with ISO 13849 PL d Cat. 3.

ER-180780 GTS Base plate 770 x 770 Universal, pitch 450

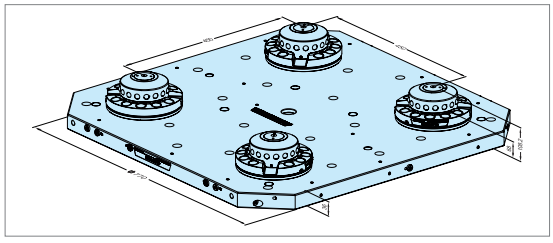

Description	4-fold base plate with mounted GTS chucks.
Application	For holding GTS pallets, workpiece carriers and machine pallets.
Actuation	From below via adapter flange with Ø 57 mm pitch circle or via lateral connections for simple plumbing. Additional adapters on request.
Installation	Mounting hole pattern for machine tables with 63 mm T-slot spacing and for star-slot tables, M12.
Note	Designed to meet safety requirements in accordance with ISO 13849 PL d Cat. 3.

ER-180781 GTS Base plate 970 x 970 Universal, pitch 560

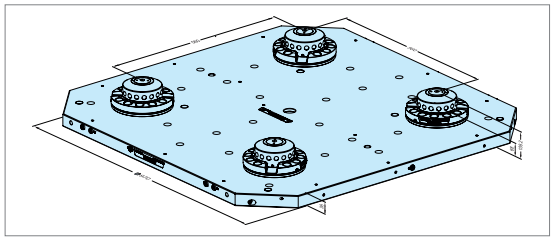

Description	4-fold base plate with mounted GTS chucks.
Application	For holding GTS pallets, workpiece carriers and machine pallets.
Actuation	From below via adapter flange with Ø 57 mm pitch circle or via lateral connections for simple plumbing. Additional adapters on request.
Installation	Mounting hole pattern for machine tables with 63 mm T-slot spacing and for star-slot tables, M12.
Note	Designed to meet safety requirements in accordance with ISO 13849 PL d Cat. 3.

EROWA GTS

Pallets

ER-155002 GTS Alignment Pallet Angle 45°

Description	Aluminum alignment pallet with ground alignment ruler.
Application	For aligning the angular position of GTS chucks during installation and service.
Note	Suitable for initial installation, inspection, and maintenance work.

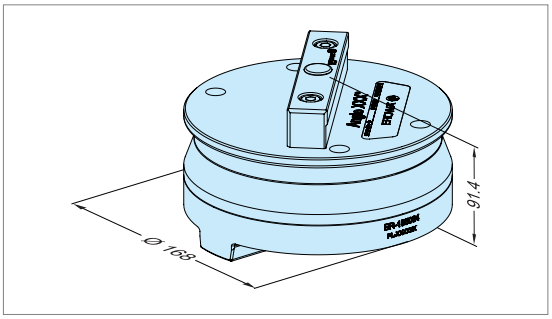

ER-175175 GTS Pallet 630 x 630 / 320

Description	Aluminum pallet with GTS clamping rings.
Application	For clamping workpieces, fixtures, and clamping devices.
Interface	Integrated interface for LoadMaster fork.
Interference diameter	Ø 800 mm.
Workpiece weight	max. 6,000 kg.
Scope of delivery	Includes 4 GTS clamping rings.
Note	Suitable for automated and manual applications.

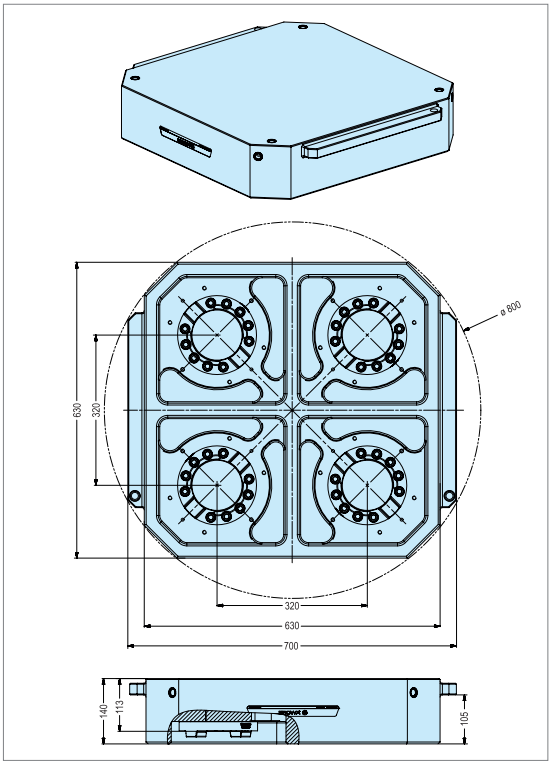

EROWA GTS

Pallets

ER-178455 GTS Pallet 800 x 800 / 450

Description	Aluminum pallet with GTS clamping rings.
Application	For clamping workpieces, fixtures, and clamping devices.
Interface	Integrated interface for LoadMaster fork.
Interference diameter	Ø 1,000 mm.
Workpiece weight	max. 6,000 kg.
Scope of delivery	Includes 4 GTS clamping rings.
Note	Suitable for automated and manual applications.

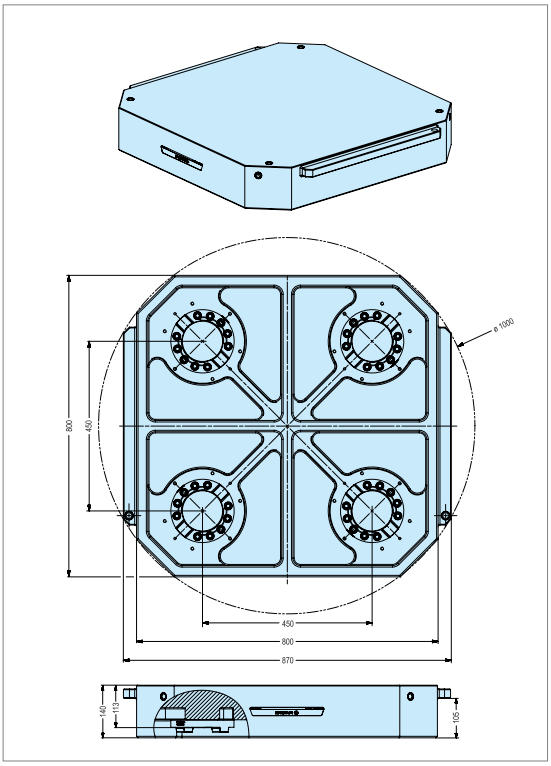

ER-176817 GTS Pallet 1000 x 1000 / 560

Description	Aluminum pallet with GTS clamping rings.
Application	For clamping workpieces, fixtures, and clamping devices.
Interface	Integrated interface for LoadMaster fork.
Interference diameter	Ø 1,244 mm.
Workpiece weight	max. 6,000 kg.
Scope of delivery	Includes 4 GTS clamping rings.
Note	Suitable for automated and manual applications.

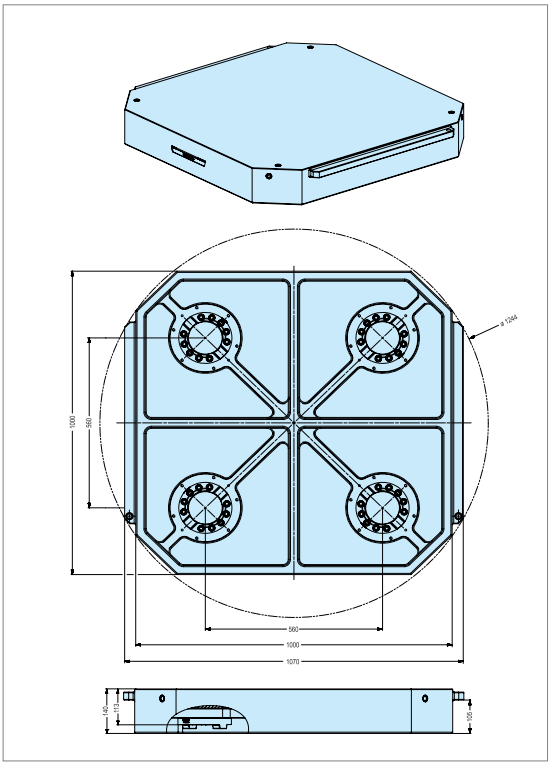

EROWA GTS

Clamping ring

ER-155004	GTS Clamping Ring

auto

Description	Clamping ring with centering function for GTS chucks.
Application	As an interface between the GTS chuck and the pallet, workpiece carrier, or machine table.
Installation	From the bottom of the pallet, workpiece carrier, or machine table.
Special feature	Wide centering surfaces ensure high stability and repeatability.
Scope of delivery	Includes M12 fastening screws and Ø 6 mm positioning pins.

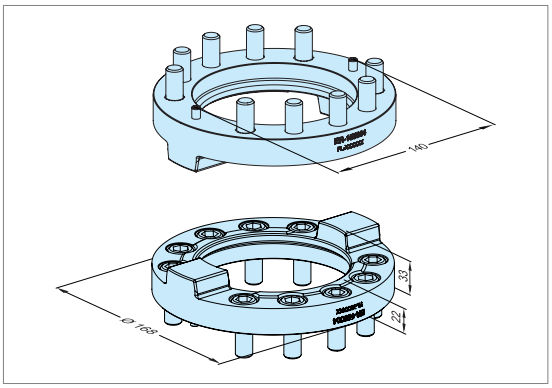

EROWA GTS

Accessories

ER-171986	GTS Venting Set

Description	Bleeding adapter for GTS chucks.
Application	For bleeding hydraulic lines and GTS chucks during installation and service.
Compatibility	For GTS chucks and GTS base plates.



ER-175971	GTS Repair Set Basic for 1 chuck

Description	Seal kit for maintaining the chuck assembly of a GTS chuck.
Application	For preventive maintenance, repair work, and to fix leaks in the chuck assembly.
Note	Seals for the internal clamping and operating mechanisms are not included.

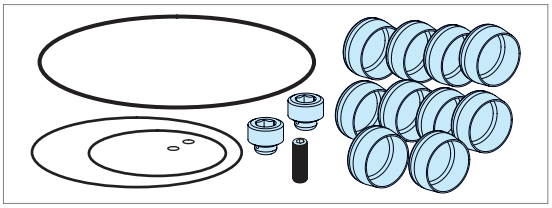

ER-173763	GTS Sealing Ring for 1 clamping ring

auto

Description	Sealing ring for additional sealing of one GTS clamping ring.
Application	To protect the clamping area from chips, coolant, and debris.
Compatibility	Use in combination with ER-178802 GTS Sealing Set 4.
Note	Recommended for automated applications.

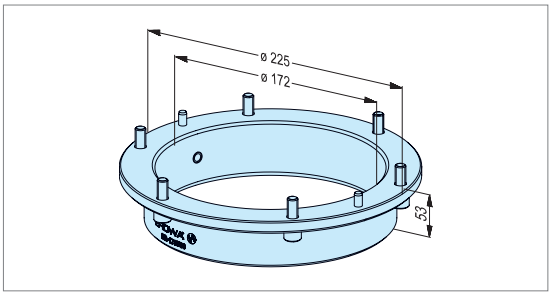

EROWA GTS

Accessories

ER-178802 GTS Sealing Set 4 for 4 chucks

auto

Description	Seal kit for four GTS chucks.
Application	To protect the clamping area from chips, coolant, and debris.
Compatibility	Use in combination with ER-173763 GTS Sealing Ring.
Note	Recommended for automated applications.

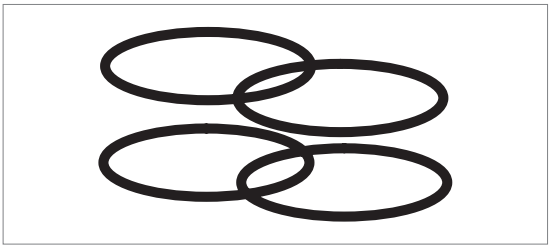

ER-176091 GTS Hydraulic unit manual for manual control, 4-fold

Description	Hydraulic power unit for manual actuation of GTS chucks.
Application	For manual GTS base plates and table setups.
Actuation	For opening and reclamping up to four GTS chucks.
Operation	Includes hand switch with 5 m cable length.
Special feature	Simple and safe operation from outside the machine.

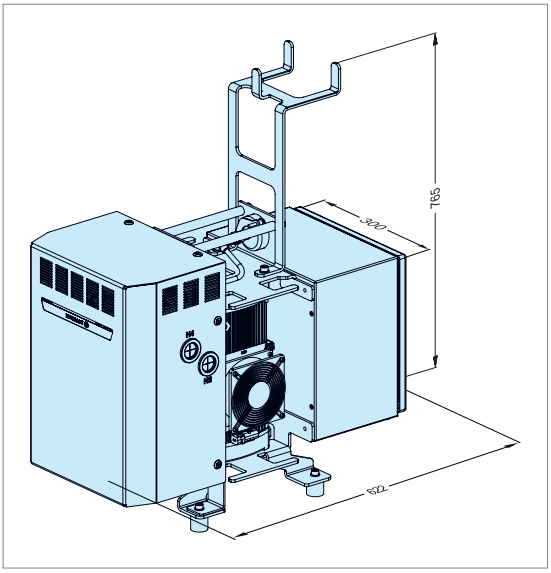

ER-179044 Hose Set 2 / 5 m incl. quick couplings, for ER-176091

Description	Hose set for connecting the GTS hydraulic power unit ER-176091 to GTS base plates and table setups.
Length	5 m.
Scope of delivery	2 hydraulic hoses, including quick-connect couplings and fittings for the base plate.



ER-179045 Hose Set 2 / 10 m incl. quick couplings, for ER-176091

Description	Hose set for connecting the GTS hydraulic power unit ER-176091 to GTS base plates and table setups.
Length	10 m.
Scope of delivery	2 hydraulic hoses, including quick-connect couplings and fittings for the base plate.



EROWA MTS

Boost the capacities of your machine tools

With the use of the MTS datum point system on your machine tool, you will lay the cornerstone for efficient and flexible production. The tooling system serves as a standard interface on all machine tools and measuring stations in the production process.
You can set up new production jobs while your machine is cutting chips. The finished jobs can be replaced with the prepared ones in next to no time. MTS chucks can be loaded manually or automatically. The down-times of the machine are reduced to a minimum.

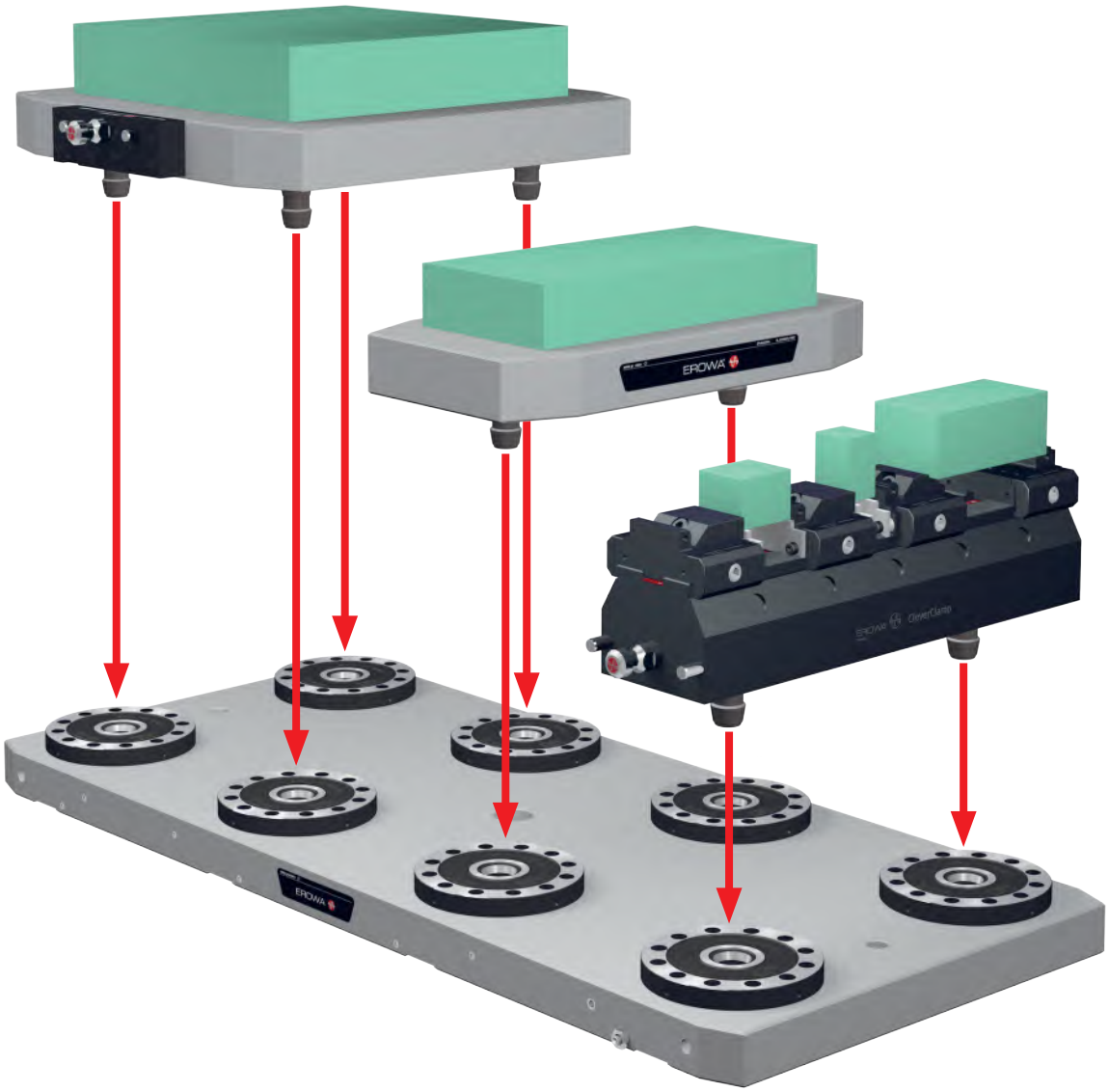

EROWA MTS

The universal interface

EROWA MTS (Modular Tooling System) stands for absolute modularity and flexibility: whether it's single-part palletizing with an MTS chuck, multiple-part palletizing with MTS base plates or an integration of additional EROWA tooling systems - all combinations are possible.
The maximum workpiece size is mainly determined by the capabilities of the machine.

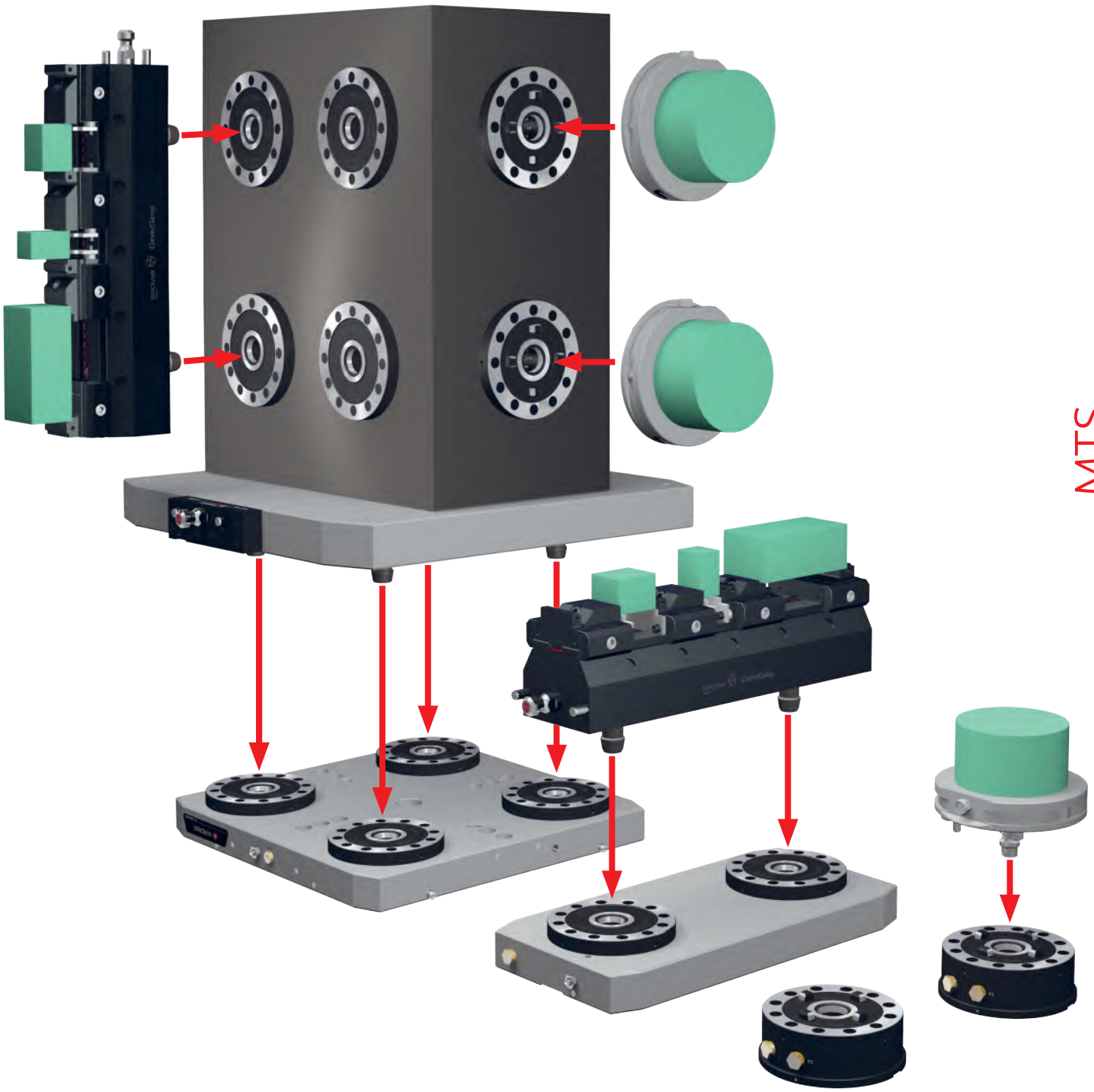

EROWA MTS

Flexible palletizing according to your requirements

IntegralChucks

MTS IntegralChucks are available in various sizes and versions. The chucks can be integrated into base plates, tombstones or directly into the machine table. The wide range of IntegralChucks are capable of satisfying almost every technical requirement.



Mounted chucks

MTS mounted chucks and single base plates can be arranged on the machine table on their own or in combinations. They are suitable for the clamping of single or multiple pallets and of customized fixtures. The mounted chucks offer you unlimited options.

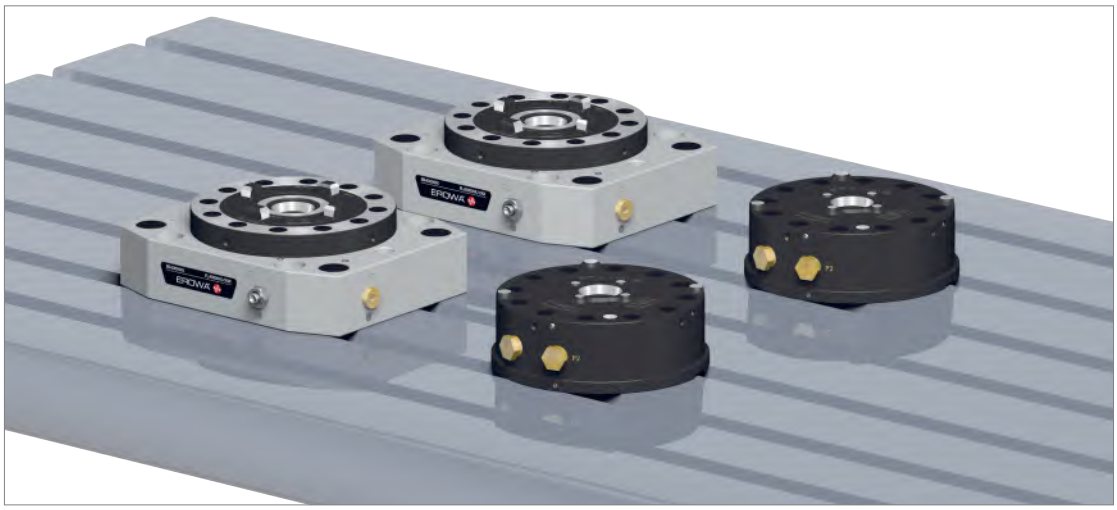

Combinations and customer requirements

The various MTS base plates and mounted chucks can be combined to create the basis for the clamping of larger MTS pallets. If you can't find the product you require in our standard range, please contact us. We'll work out a optimal solution for you.



Adaptations

With the modular tooling system as the basis on your machine table, you are keeping all your options open. All EROWA's tooling systems such as your workpiece carriers, fixtures, etc. can be adapted to MTS. Active tooling systems can be controlled via media feed-through. EROWA MTS will guarantee you the highest degree of flexibility.



EROWA MTS

The datum point tooling system for your production

The flexible operation of the EROWA MTS tooling system is revealed in practice. No matter whether it is a standard solution or a customer-specific configuration, the system can be adapted to practically any machine situation. The system interchangeability enables a wide variety of workpiece carriers to exchange at lightning speed. The automatic workpiece change can be retrofitted at any time.

FACTS

- Universal and modularly extendable
- Single and multiple palletization
- Low profile
- High clamping power
- Repeatability < 0.003 mm
- Can be automated
- Reliable and durable



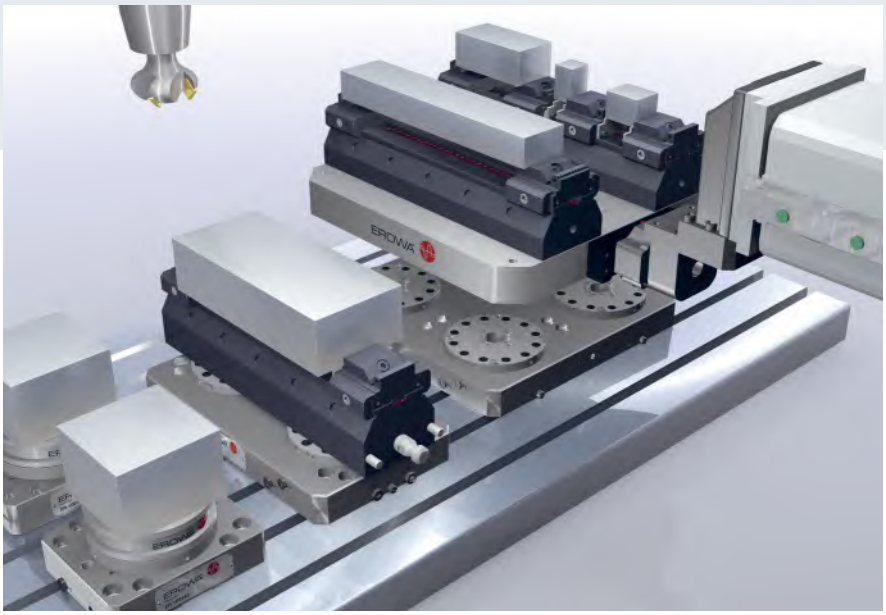

MTS base plates are the flexible and precise interface for single or multiple palletization.

MTS base plates are available in various versions, depending on the model with 1, 2, 4, 6 or 8 MTS chucks. We would also be pleased to advise you with regard to customized versions.

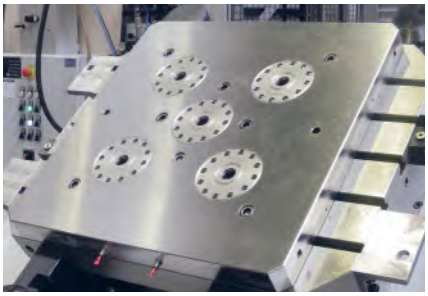

The time-tested and versatile datum point tooling system enables pallets to be exchanged within seconds with a repeatability of < 0.003 mm.

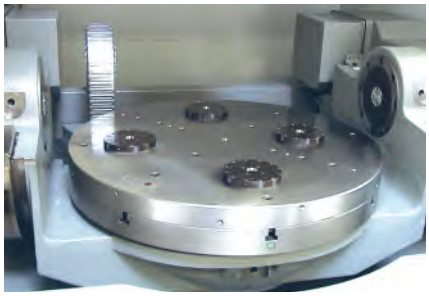

The low profile of the tooling system leaves a great deal of space for workpieces and their machining process. MTS chucks can be attached to the machine table or directly integrated in it.

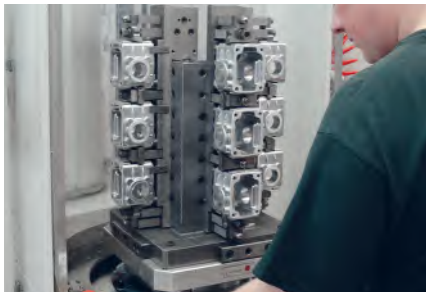

Workpieces and fixtures are palletized outside the machine. In this way, they can be put on the machine without any further alignment. Thanks to the MTS chucks, they are clamped in their positions on the table with precision and stability.



Existing vises, gauges and fixtures are equipped with chucking spigots or palletized. In this way, they are immediately integrated in the entire MTS system.

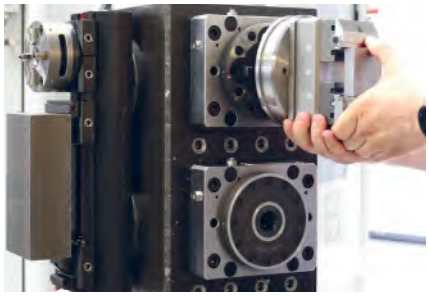

The EROWA mineral-cast tombstone provides a great deal of space for the simultaneous setting-up of different workpieces. The entire working space of the machine is optimally exploited with the use of a tombstone.



The MTS system is perfectly suitable for automatic pallet change. During the change process, the support surfaces of the chucks, pallets and chucking spigots are automatically cleaned. The MTS pallets are neatly and precisely positioned.

EROWA MTS

The different EROWA MTS tooling systems at a glance

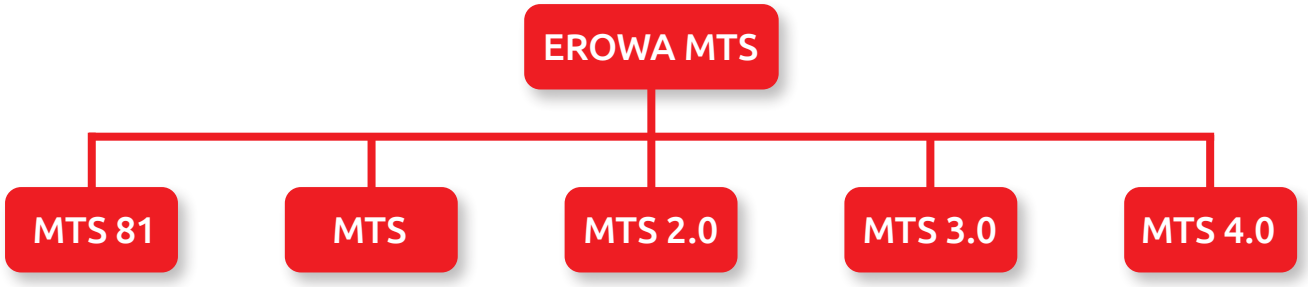

MTS 3.0 and **MTS 4.0** expand the product range and ensure a higher safety standard for milling and turning applications. These solutions are developed on a project-by-project basis. For more information, please refer to the product catalogs or contact your EROWA dealer.

EROWA MTS 81

Compact design, high clamping force

The MTS 81 is used wherever space is limited, without sacrificing the benefits of a zero-point clamping system or its high clamping force. MTS 81 clamping units feature a re-tightening function and are available for both automatic and manual use.

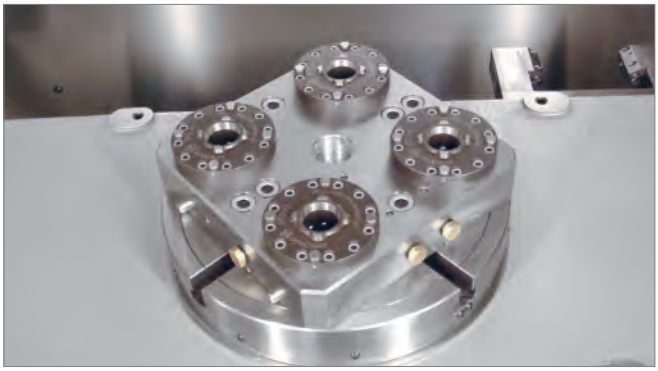

EROWA MTS

The universal interface

Used in 10,000 applications and proven in practice. The MTS zero-point clamping system has become an indispensable part of machining and the EROWA product portfolio. IntegralChucks are available in a single version for single-pallet clamping and in a multi-version for multi-pallet clamping. Both versions are available for universal use on machine tools.

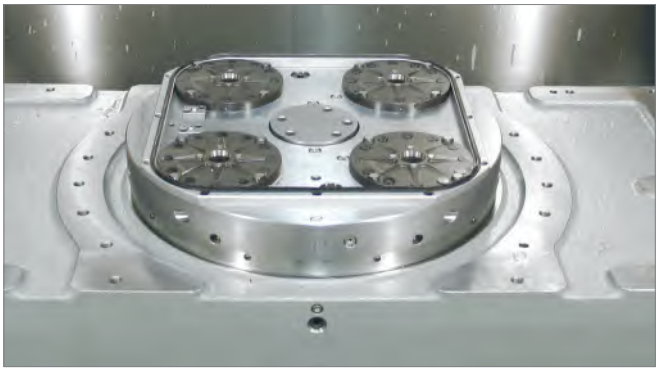

EROWA MTS 2.0

For high machining forces

This high-performance clamping system is suitable for 5-axis machining and mill-turn applications. With integrated open-loop control and a remarkable clamping force of 20 kN, the corrosion-resistant MTS 2.0 chucks meet even the most demanding requirements in production environments. The MTS 2.0 IntegralChucks are available for single and multiple palletizing in both manual and automatic operation. With MTS 2.0, you are choosing a premium product at an attractive price.

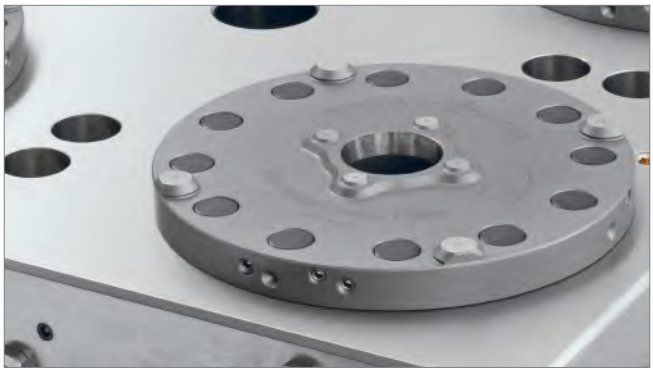

EROWA MTS 3.0

The highest safety standards

The MTS 3.0 offers certified safety in accordance with ISO 13849 Performance Level D, Category 3, and ensures a high level of process reliability. It is designed for demanding milling and turning applications and guarantees secure workpiece clamping and stable, productive processes even under heavy loads.

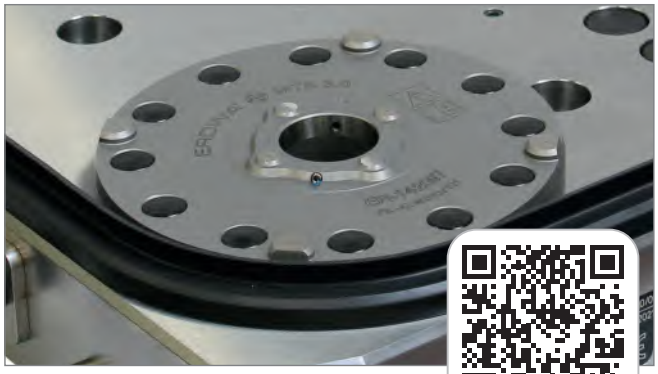

more info: MTS 3.0

EROWA MTS 4.0

Intelligent Process Control

Increasing connectivity and stricter safety requirements in production call for innovative technologies. With digital data processing of current clamping force, status, and other relevant information, the MTS 4.0 is the ideal choice for smart and future-oriented manufacturing processes.



more info: MTS 4.0

EROWA MTS

The various EROWA MTS tooling systems: an overview



To make it easier for you to find your way about the fields of application for EROWA products, we use the following symbols in all our documents:

1. Manual operation
2. Operate with compressed air jet
3. Operate with manual valve
4. Operate with manual control unit
5. Operate with electro-pneumatic control unit
6. With central flushing clearance
7. Suited for submerged operation
8. Corrosion-resistant material
9. Suited for automatic operation
10. Handling with EROWA Robot gripper S
11. Handling with EROWA Robot gripper Combi
12. Handling with EROWA Robot gripper C
13. Handling with EROWA Robot gripper 72
14. Handling with EROWA Robot gripper 115
15. Handling with EROWA Robot gripper 148
16. Handling with EROWA Robot gripper RN PC 210
17. Handling with EROWA Robot gripper RCS
18. Handling with EROWA Robot gripper WGS-500

EROWA MTS

MTS 81	Technical data	36
MTS 81	Integral chucks	37
MTS	Technical data	38
MTS	Integral chucks	40
MTS	Mounted chucks	42
MTS	Base plates 1- / 2- / 4- / 6- / 8-fold	44
MTS 2.0	Technical data	50
MTS 2.0	Integral chucks	52
MTS 2.0	Base plates 4-fold	54
MTS	Pallets, pitch 160 4-fold	56
MTS	Pallets, pitch 200 2-fold	57
MTS	Pallets, pitch 200 4-fold	57
MTS	Pallets, pitch 250 2-fold	60
MTS	Pallets, pitch 250 4-fold	60
MTS	Single pallets	63
MTS	Chucking spigots	65
MTS	Operation	68
MTS	Accessories	70
MTS	Mineral Cast Cube	78

MTS

For chip-removing processes

For EDM sinking

For WEDM

EROWA MTS 81

Small size, high clamping power!

Applications

Handling

Manual / Loading facility / Robot

Function MTS 81 Chuck

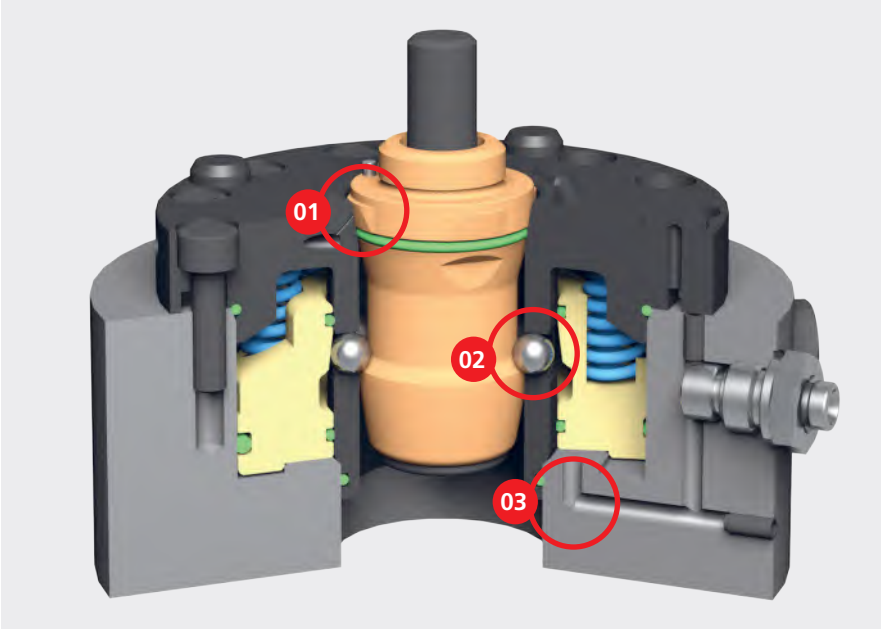

FACTS

- Compact design
- With reclamping function
- High clamping power of 10,000 N
- Precise
- Reliable
- Safe through self-locking system

01 | Precise
Play-free, conical centering.
Repeatability: < 0.003 mm.
Easy insertion of the pallets without any jamming.

02 | Clamping mechanism
Reliable clamping mechanism through self-locking ball lock. Stable, low level of vibration.

03 | Open
MTS 81 chucks are operated pneumatically.

compatible with
- MTS 81
- MTS
- MTS 2.0
- MTS+



Technical data - MTS 81

	MTS 81
Repeatability	< 0.003 mm
Clamping	with spring tension (clamped without pressure)
Opening pressure	min. 8.5 bar (pneumatic)
Monitoring	combined locking & presence check (pneumatic)
Clamping power with reclamping	10,000 N/chuck
Holding power	> 60,000 N/chuck
Reclamp	yes
Clamping cycles	> 500,000

Power package
A reclamping feature provides up to 10,000 N of clamping power.
The chucks are opened pneumatically.

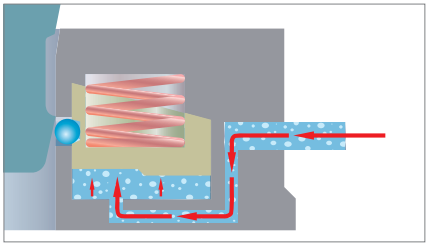

EROWA MTS 81

Integral chucks

Technical data	MTS 81 integral chucks pneumatic
Repeatability	< 0.003 mm
Clamping	with spring tension (clamped without pressure)
Opening pressure	min. 8.5 bar (pneumatic)
Monitoring (Chuck P/A)	combined locking & presence check (pneumatic)
Clamping power with reclamping	up to 10,000 N/chuck

M = Multi
P = pneumatically operated
A = able to automate

Integration variant applicable to MTS 81 IntegralChucks. Observe tolerances according to integration instructions!

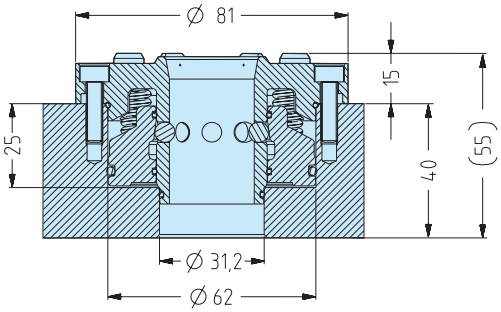

ER-057943 MTS 81 IntegralChuck M-P

Version	For direct integration in machine tables, plates, tombstones, squares or dividing heads.
Connections	2 pneumatic connections: for opening and reclamping.
Application	To accommodate multiple pallets.

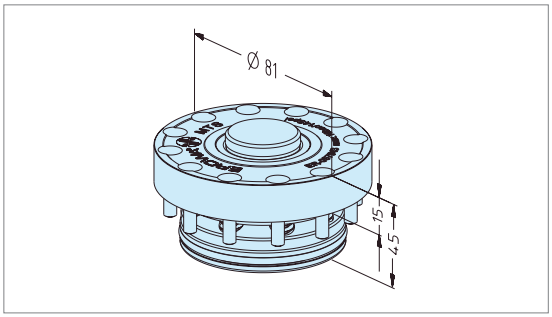

ER-059016 MTS 81 IntegralChuck M-P/A

Version	For direct integration in machine tables, plates, tombstones, squares or dividing heads.
Connections	3 pneumatic connections: for opening, reclamping and cleaning / presence check.
Application	To accommodate multiple pallets.

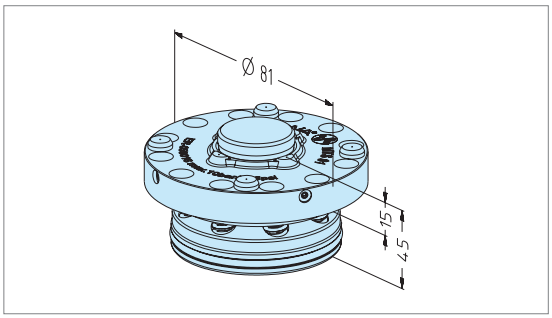

EROWA develops custom-made solutions tailored to your needs. We would be happy to design custom MTS 81 base plates or pallets for you that are precisely tailored to your requirements. For more information, please contact your EROWA partner.

EROWA MTS

The universal interface

Applications

Handling

Manual / Loading facility / Robot

Function MTS Chuck

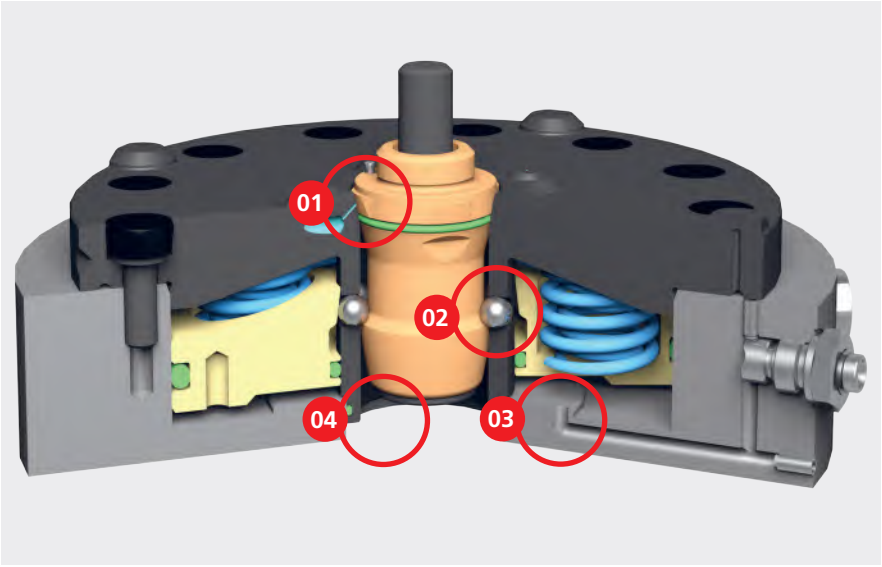

FACTS

- Tested in practice 10,000 times
- Repeatability < 0.003 mm
- High clamping power of 12,000 N
- Durable and reliable
- With ceramic balls

01 | Precise
Play free, conical centering.
Repeatability: <0.003 mm.
Easy insertion of the pallets without any jamming.

02 | Clamping mechanism
Reliable clamping mechanism through self-locking ball lock. Stable, low level of vibration.

03 | Open
MTS chucks are pneumatically operated.

04 | Cleanliness
Liquids can drain off. No dirt traps.

compatible with
- MTS 81
- MTS
- MTS 2.0
- MTS+



Technical data - MTS

	MTS
Repeatability	< 0.003 mm
Clamping	with spring tension (clamped without pressure)
Opening pressure	min. 7 bar (pneumatic)
Monitoring (Chuck P/A)	combined locking & presence check (pneumatic)
Clamping power	12,000 N/chuck
Holding power	> 60,000 N/chuck
Reclamp	no
Clamping cycles	> 500,000

MTS chuck, automatable
Automatic cleaning of contact surfaces and of the centering spigot cone while the workpiece is changed.

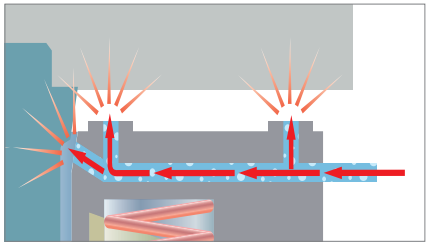

EROWA MTS

The components

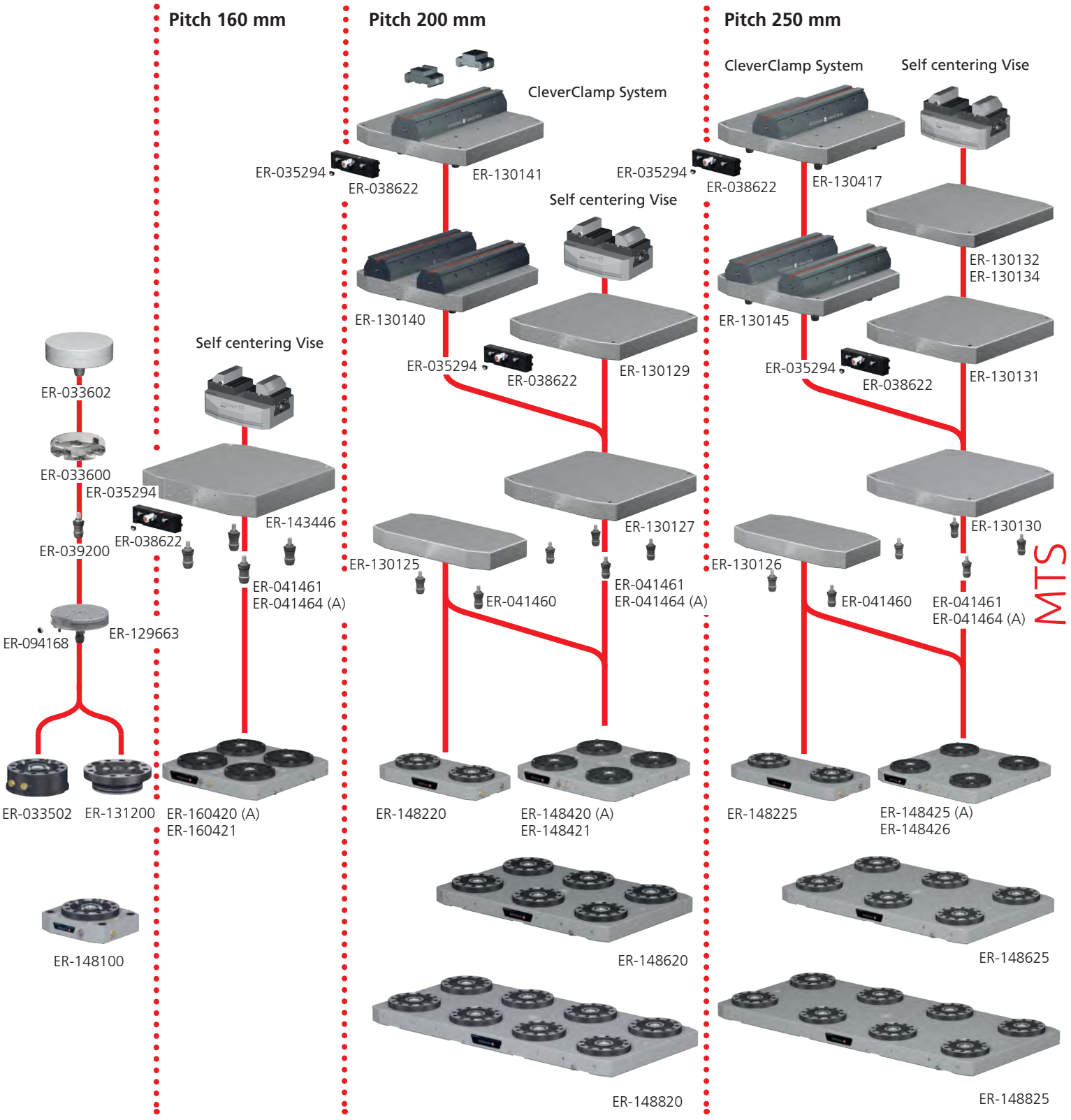

(A) = automatic

EROWA MTS

Integral chucks

Technical data	MTS integral chucks pneumatic
Repeatability	< 0.003 mm
Indexation, pallet	4 x 90° (MTS IntegralChuck S)
Clamping	with spring tension (clamped without pressure)
Opening pressure	min. 7 bar (pneumatic)
Monitoring (Chuck P/A)	combined locking & presence check (pneumatic)
Clamping power	12,000 N/chuck

S = Single
M = Multi
P = pneumatically operated
A = able to automate

Fitting variant for MTS IntegralChuck.
Pay attention to the tolerances according to operating instructions!

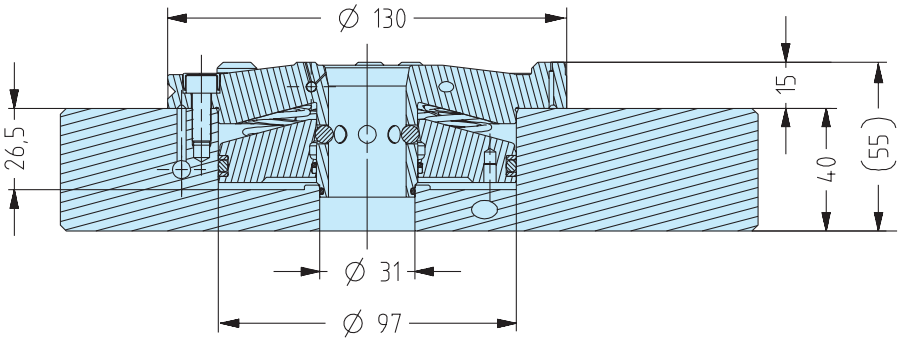

ER-131200 MTS IntegralChuck S-P

Version	For direct integration in machine tables, plates, tombstones, squares or dividing heads.
Connections	1 pneumatic connection: for opening.
Application	To accommodate single or multiple pallets

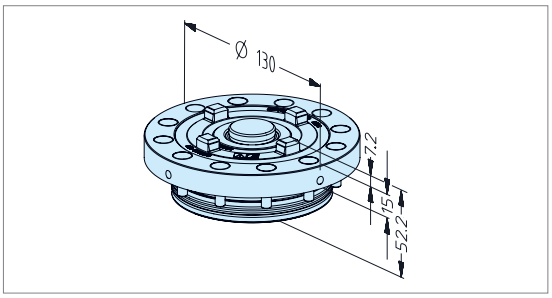

ER-131210 MTS IntegralChuck S-P/A

Version	For direct integration in machine tables, plates, tombstones, squares or dividing heads.
Connections	2 pneumatic connections: for opening and cleaning / presence check.
Application	To accommodate single or multiple pallets.

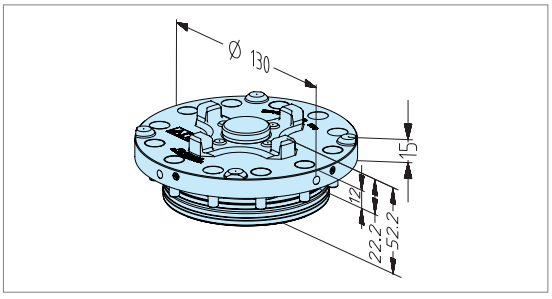

ER-131220 MTS IntegralChuck M-P

Version	For direct integration in machine tables, plates, tombstones, squares or dividing heads.
Connections	1 pneumatic connection: for opening.
Application	To accommodate multiple pallets.

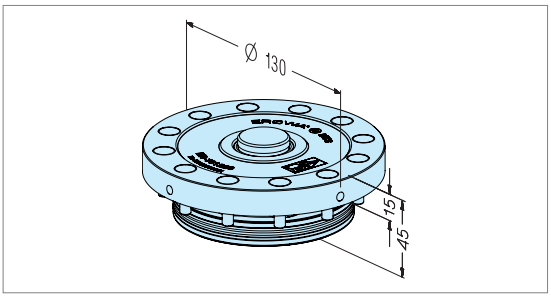

ER-131230 MTS IntegralChuck M-P/A

Version	For direct integration in machine tables, plates, tombstones, squares or dividing heads.
Connections	2 pneumatic connections: for opening and cleaning / presence check.
Application	To accommodate multiple pallets.

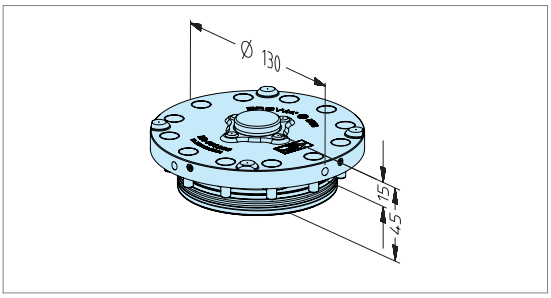

EROWA MTS

Mounted chucks

Technical data	MTS mounted chucks pneumatic
Repeatability	< 0.003 mm
Indexation, pallet	4 x 90° (MTS Chuck S)
Clamping	with spring tension (clamped without pressure)
Opening pressure	min. 7 bar (pneumatic)
Monitoring (Chuck P/A)	combined locking & presence check (pneumatic)
Clamping power	12,000 N/Chuck

S = Single
M = Multi
P = pneumatically operated
A = able to automate

ER-033502 MTS Chuck S-P





Version	For direct mounting on machine tables, plates, tombstones, squares, etc.
Connections	Lateral, 1 piece (pneumatic): for opening.
Application	To accommodate single or multiple pallets.
Accessories	Order separately for chuck fitting: MTS bracket ER-033804 or ER-033805.

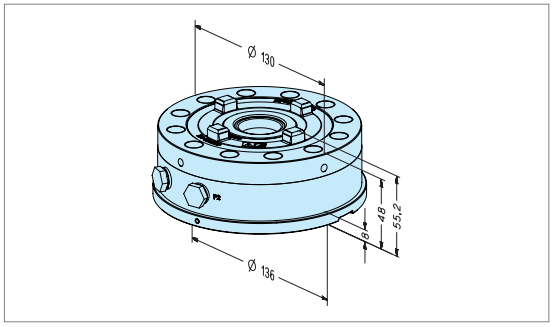

ER-035502 MTS Chuck S-P/A





Version	For direct mounting on machine tables, plates, tombstones, squares etc.
Connections	Lateral, 2 pieces (pneumatic): for opening and cleaning / presence check.
Application	To accommodate single or multiple pallets.
Accessories	Order separately for chuck fitting: MTS bracket ER-033804 or ER-033805.

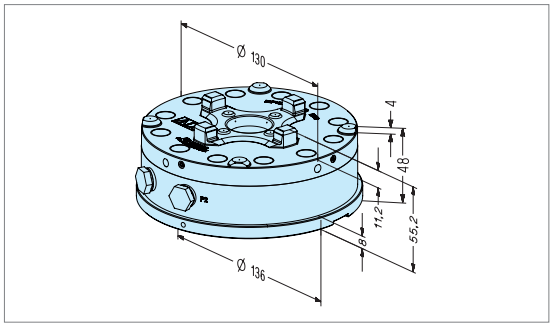

ER-033500 MTS Chuck M-P

Version	For direct mounting on machine tables, plates, tombstones, squares, etc.
Connections	Lateral, 1 piece (pneumtatic): for opening.
Application	To accommodate multiple pallets.
Accessories	Order separately for chuck fitting: MTS bracket ER-033804 or ER-033805.

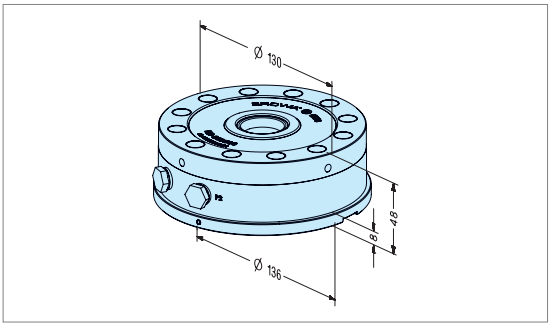

ER-035500 MTS Chuck M-P/A

Version	For direct mounting on machine tables, plates, tombstones, squares etc.
Connections	Lateral, 2 pieces (pneumatic): for opening and cleaning / presence check.
Application	To accommodate multiple pallets.
Accessories	Order separately for chuck fitting: MTS bracket ER-033804 or ER-033805.

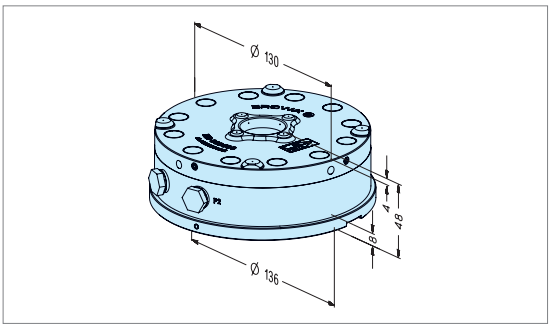

EROWA MTS

Base plates, 1-fold

Technical data	MTS base plates, 1-fold pneumatic
Repeatability	< 0.003 mm
Indexation, pallet	4 x 90° (MTS Chuck S)
Clamping	with spring tension (clamped without pressure)
Opening pressure	min. 7 bar (pneumatic)
Clamping power	12,000 N

S = Single
M = Multi
P = pneumatically operated

ER-148100 MTS base plate 149 x 180 S-P 1-fold



Version	Baseplate, steel unhardened.
Connections	Lateral, 1 piece (pneumatic): for opening.
Application	To accommodate single and multiple pallets. For direct assembly on machine tables.
Mounting	Mounting hole pattern for grid 50mm/M12 and for machine tables with T-slot distances of 63 and 100mm.

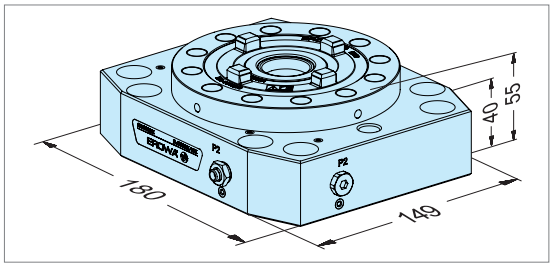

ER-148101 MTS base plate 149 x 180 M-P 1-fold



Version	Baseplate, steel unhardened.
Connections	Lateral, 1 piece (pneumatic): for opening.
Application	To accommodate multiple pallets. For direct assembly on machine tables.
Mounting	Mounting hole pattern for grid 50mm/M12 and for machine tables with T-slot distances of 63 and 100mm.

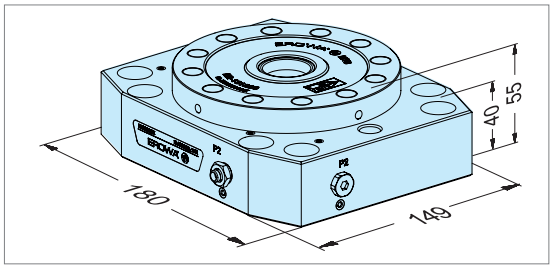

EROWA MTS

Base plates, 2-fold

Technical data	MTS base plates, 2-fold pneumatic
Repeatability	< 0.003 mm
Indexation, pallet	1 x 180°
Clamping	with spring tension (clamped without pressure)
Opening pressure	min. 7 bar (pneumatic)
Clamping power	24,000 N (2 x 12,000 N)

P = pneumatically operated

ER-148220 MTS base plate 180 x 360 P Pitch 200



Version	Base plate, steel, unhardened. Pitch: 200 mm.
Connections	Lateral, 1 piece (pneumatic): for opening.
Application	To accommodate 2-fold pallets. For direct assembly on machine tables.
Note	Attachment boreholes can be drilled by customers.
Caution	Do not drill through any air ducts! Please check operating instructions.

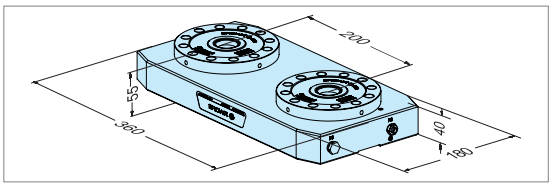

ER-148225 MTS base plate 200 x 410 P Pitch 250



Version	Base plate, steel, unhardened. Pitch: 250 mm.
Connections	Lateral, 1 piece (pneumatic): for opening.
Application	To accommodate 2-folt pallets. For direct assembly on machine tables.
Note	Attachment boreholes can be drilled by customers.
Caution	Do not drill through any air ducts! Please check operating instructions.

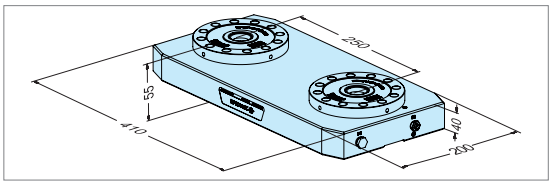

EROWA MTS

Base plates, 4-fold

Technical data	MTS base plates, 4-fold pneumatic
Repeatability	< 0.003 mm
Clamping	with spring tension (clamped without pressure)
Opening pressure	min. 7 bar (pneumatic)
Clamping power	48,000 N (4 x 12,000 N)

P = pneumatically operated

ER-160421 MTS base plate 320 x 320 P Universal, pitch 160

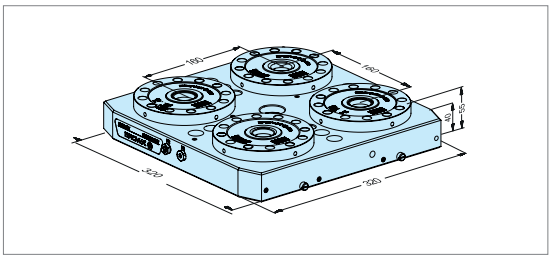

Version	Base plate universal, steel unhardened, pitch 160 mm. Including adapter flange without air boreholes.
Connections	Lateral, 1 piece (pneumatic): for opening.
Option	Control from underneath possible with the relevant adapter flange (available on request).
Application	To accommodate multiple pallets. For direct assembly on machine tables.
Mounting	Mounting hole pattern for grid 50mm/M12 and for machine tables with T-slot distances of 63 and 100mm.

ER-148421 MTS base plate 360 x 360 P Universal, pitch 200

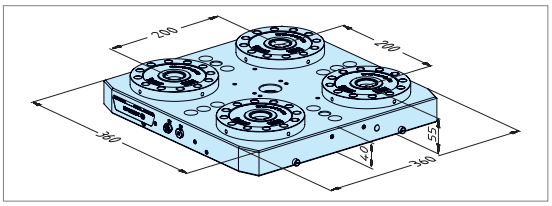

Version	Base plate universal, steel unhardened, pitch 200mm. Including adapter flange without air boreholes.
Connections	Lateral, 1 piece (pneumatic): for opening.
Option	Control from underneath possible with the relevant adapter flange (available on request).
Application	To accommodate multiple pallets. For direct assembly on machine tables.
Mounting	Mounting hole pattern for grid 50mm/M12 and for machine tables with T-slot distances of 63 and 100mm.

ER-148426 MTS base plate 410 x 410 P Universal, pitch 250

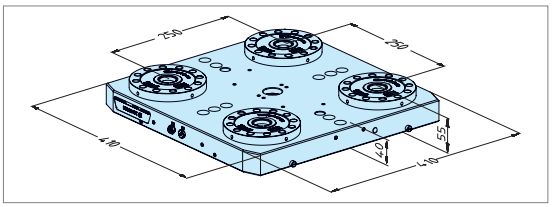

Version	Base plate universal, steel unhardened, pitch 250mm. Including adapter flange without air boreholes.
Connections	Lateral, 1 piece (pneumatic): for Opening.
Option	Control from underneath possible with the relevant adapter flange (available on request).
Application	To accommodate multiple pallets. For direct mounting on machine tables.
Mounting	Mounting hole pattern for grid 50mm/M12 and for machine tables with T-slot distances of 63 and 100mm.

EROWA MTS

Base plates, 4-fold, automatable

Technical data	MTS base plates, 4-fold, pneumatic, automatable
	Repeatability < 0.003 mm
Clamping	with spring tension (clamped without pressure)
Opening pressure	min. 7 bar (pneumatic)
Monitoring (Chuck P/A)	combined locking & presence check (pneumatic)
Clamping power	48,000 N (4 x 12,000 N)

P = pneumatically operated
A = able to automate

ER-160420 MTS base plate 320 x 320 P/A Universal, pitch 160

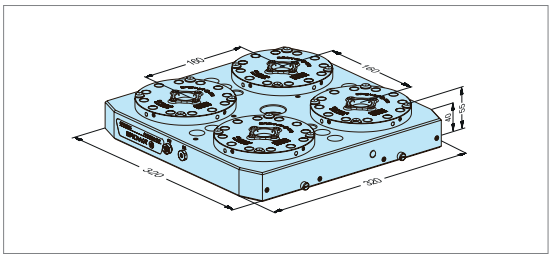

Version	Base plate universal, steel unhardened, pitch 160 mm. Including Adapter flange without air boreholes.
Connections	Lateral, 2 pieces (pneumatic): for opening and and cleaning/presence check.
Option	Control from underneath possible with the relevant adapter flange (available on request).
Application	To accommodate multiple pallets. For direct mounting on machine tables.
Mounting	Mounting hole pattern for grid 50mm/M12 and for machine tables with T-slot distances of 63 and 100mm.

ER-148420 MTS base plate 360 x 360 P/A Universal, pitch 200

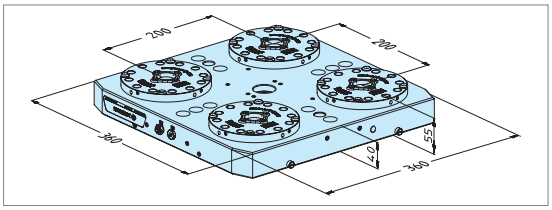

Version	Base plate universal, steel unhardened, pitch 200mm. Including Adapter flange without air boreholes.
Connections	Lateral, 2 pieces (pneumatic): for opening and and cleaning/presence check.
Option	Control from underneath possible with the relevant adapter flange (available on request).
Application	To accommodate multiple pallets. For direct mounting on machine tables.
Mounting	Mounting hole pattern for grid 50mm/M12 and for machine tables with T-slot distances of 63 and 100mm.

ER-148425 MTS base plate 410 x 410 P/A Universal, pitch 250

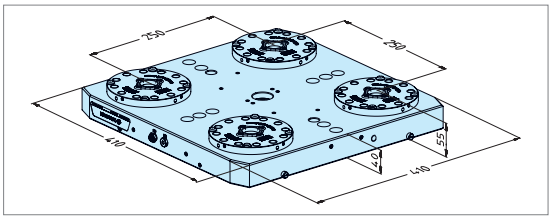

Version	Base plate universal, steel unhardened, pitch 250mm. Including adapter flange without air boreholes.
Connections	Lateral, 2 pieces (pneumatic): for opening and and cleaning/presence check.
Option	Control from underneath possible with the relevant adapter flange (available on request).
Application	To accommodate multiple pallets. For direct mounting on machine tables.
Mounting	Mounting hole pattern for grid 50mm/M12 and for machine tables with T-slot distances of 63 and 100mm.

EROWA MTS

Base plates, 6-fold

Technical data	MTS base plates, 6-fold pneumatic
Repeatability	< 0.003 mm
Clamping	with spring tension (clamped without pressure)
Opening pressure	min. 7 bar (pneumatic)
Clamping power	72,000 N (6 x 12,000 N)

P = pneumatically operated

ER-148620 MTS base plate 360 x 560 P
Pitch 200



Version	Base plate, steel, unhardened. Pitch: 200 mm.
Connections	Lateral, 1 piece (pneumatic): for opening.
Application	To accommodate multiple pallets. For direct assembly on machine tables.
Note	Attachment boreholes can be drilled by customers.
Caution	Do not drill through any air ducts! Please check operating instructions.

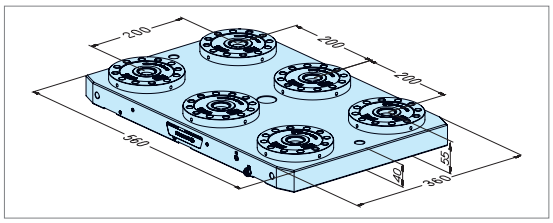

ER-148625 MTS base plate 410 x 660 P
Pitch 250



Version	Base plate, steel, unhardened. Pitch: 250 mm.
Connections	Lateral, 1 piece (pneumatic): for opening.
Application	To accommodate multiple pallets. For direct assembly on machine tables.
Note	Attachment boreholes can be drilled by customers.
Caution	Do not drill through any air ducts! Please check operating instructions.

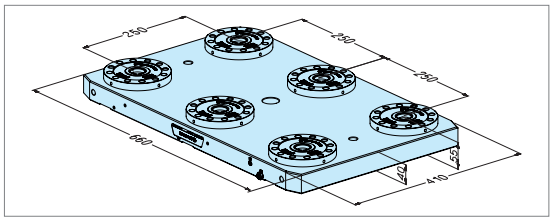

EROWA MTS

Base plates, 8-fold

Technical data	MTS base plates, 8-fold pneumatic
Repeatability	<0.003 mm
Clamping	with spring tension (clamped without pressure)
Opening pressure	min. 7 bar (pneumatic)
Clamping power	96,000 N (8 x 12,000 N)

P = pneumatically operated

ER-148820 MTS base plate 360 x 760 P
Pitch 200



Version	Base plate, steel, unhardened. Pitch: 200 mm.
Connections	Lateral, 1 piece (pneumatic): for opening.
Application	To accommodate multiple pallets. For direct assembly on machine tables.
Note	Attachment boreholes can be drilled by customers.
Caution	Do not drill through any air ducts! Please check operating instructions.

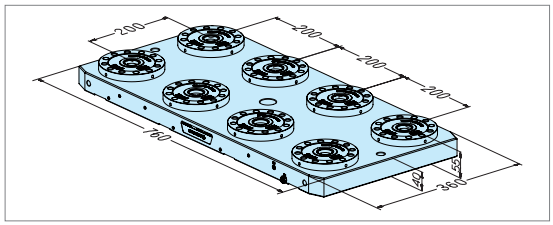

ER-148825 MTS base plate 410 x 910 P
Pitch 250



Version	Base plate, steel, unhardened. Pitch: 250 mm.
Connections	Lateral, 1 piece (pneumatic): for opening.
Application	To accommodate multiple pallets. For direct assembly on machine tables.
Note	Attachment boreholes can be drilled by customers.
Caution	Do not drill through any air ducts! Please check operating instructions.

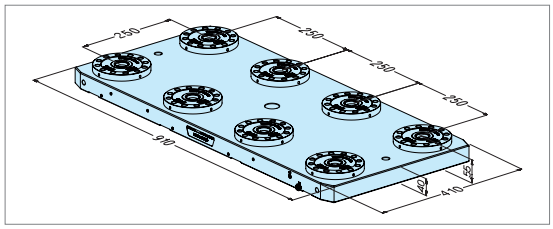

EROWA MTS 2.0

The datum-point system for the highest demands

Applications

Handling

Manual / Loading facility / Robot

Function MTS 2.0 Chuck

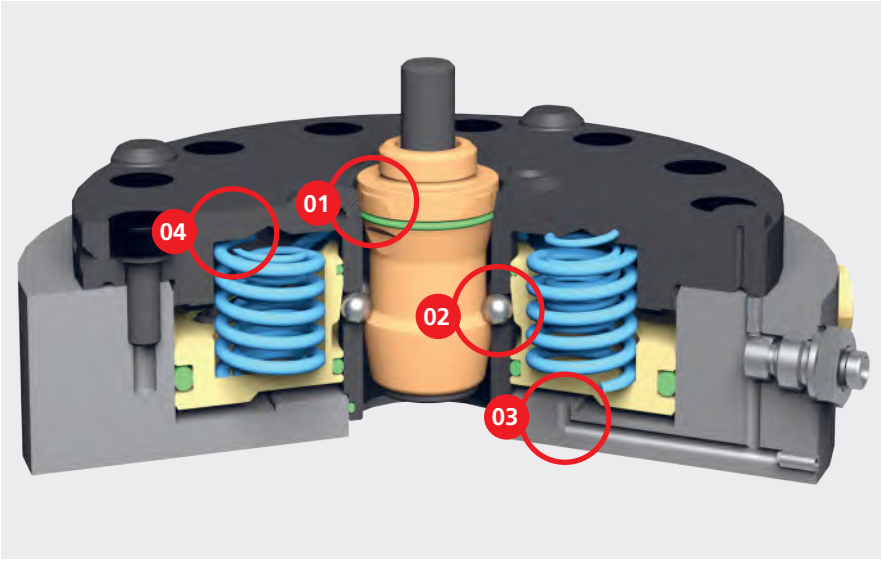

FACTS

- Repeatability < 0.003 mm
- Power pack: 20,000 N clamping power
- Only 6 bar opening pressure
- With open check
- Ceramic balls
- Rust-resistant

01 | High precision
Play free, conical centering.
Repeatability: < 0.003 mm.
Easy insertion of the pallets without any jamming.

02 | Clamping mechanism
Reliable clamping mechanism through self-locking ball lock.
Stable, low level of vibration.

03 | Open
MTS 2.0 chucks are operated pneumatically. The chucks require only 6 bar opening pressure despite their high clamping power of 20,000 N.

04 | Open monitoring
Know for sure when the MTS 2.0 chuck is open thanks to integrated open monitoring.

Technical data - MTS 2.0

	MTS 2.0
Repeatability	< 0.003 mm
Clamping	with spring tension (clamped without pressure)
Opening pressure	min. 6 bar (pneumatic)
Reclamp pressure	max. 6 bar
Monitoring	open check and combined locking & presence check (pneumatic)
Clamping power	9,000 N/Chuck (spring tension)
with reclamping	20,000 N/Chuck
Holding power	> 60,000 N/Chuck
Reclamp	yes
Clamping cycles	> 500,000
Material	INOX

compatible with
- MTS 81
- MTS
- MTS 2.0
- MTS+



EROWA MTS 2.0

The components

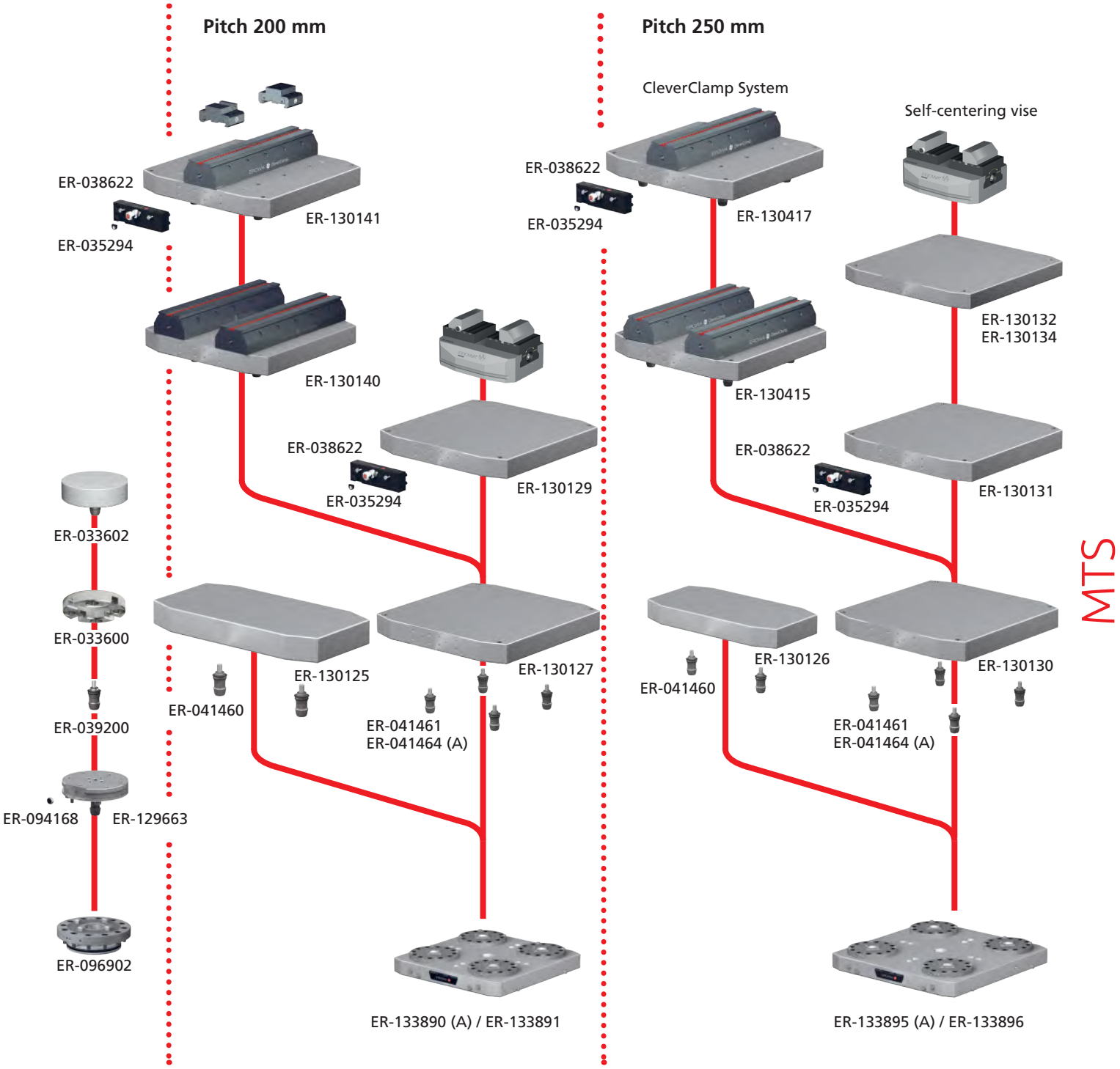

A) = automatic

EROWA MTS 2.0

Integral chucks

Technical data	MTS 2.0 integral chuck, pneumatic
Repeatability	< 0.003 mm
Indexation, pallet	4 x 90° (MTS 2.0 IntegralChuck S)
Clamping	with spring tension (clamped without pressure)
Opening pressure	min. 6 bar (pneumatic)
Monitoring	open check and combined locking & presence check (pneumatic)
Clamping power	9,000 N (spring tension)
with reclamping	20,000 N

S = Single
M = Multi
P = pneumatically operated
A = able to automate

Fitting variant for MTS IntegralChuck.
Pay attention to the tolerances according to operating instructions!

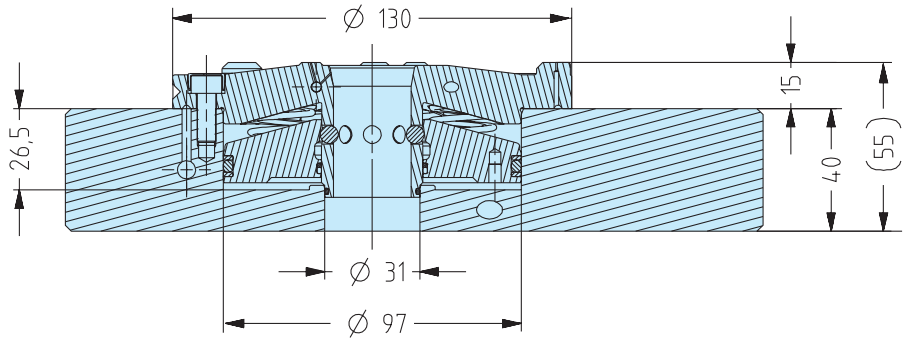

ER-096902 MTS 2.0 IntegralChuck S-P



Version	For direct integration in machine tables, plates, tombstones, angles or dividing heads.
Connections	3 pneumatic connections: for opening, reclamping and the open check.
Application	To accommodate single and multiple pallets.

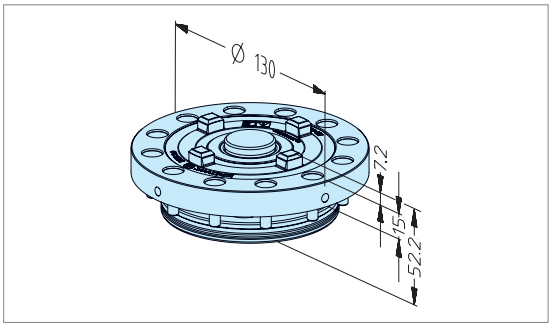

ER-096903 MTS 2.0 IntegralChuck S-P/A



Version	For direct integration in machine tables, plates, tombstones or dividing heads.
Connections	4 pneumatic connections: for opening, cleaning/presence checks, reclamping and the open check.
Application	To accommodate single and multiple pallets.

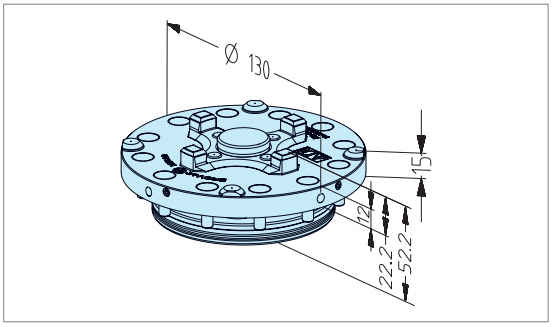

ER-096900 MTS 2.0 IntegralChuck M-P



Version	For direct integration in machine tables, plates, tombstones or dividing heads.
Connections	3 pneumatic connections: for opening, reclamping and the open check.
Application	To accommodate muliple pallets.

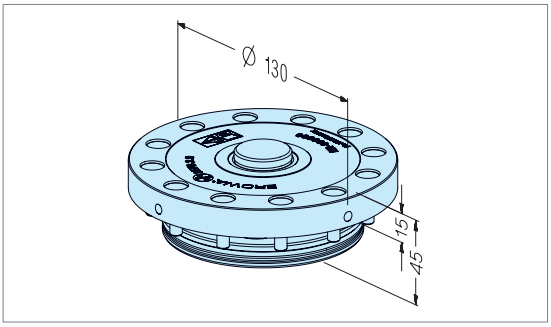

ER-096901 MTS 2.0 IntegralChuck M-P/A



Version	For direct integration in machine tables, plates, tombstones, angles or dividing heads.
Connections	4 pneumatic connections: for opening, cleaning/presence check, reclamping and the open check.
Application	To accommmodate multiple pallets.

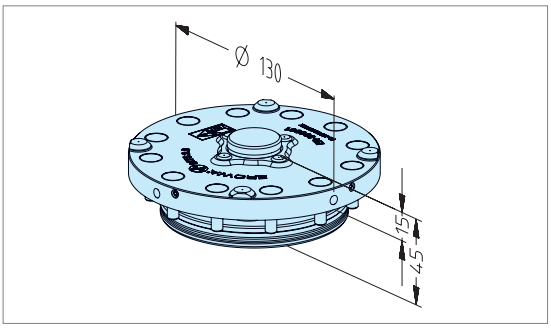

EROWA MTS 2.0

Base plates, 4-fold

Technical data	MTS base plate 2.0, 4-fold, pneumatic
Repeatability	< 0.003 mm
Clamping	with spring tension (clamped without pressure)
Opening pressure	min. 6 bar (pneumatic)
Clamping power	36,000 N (4 x 9,000 N) (spring tension)
with reclamping	80,000 N (4 x 20,000 N)

P = pneumatically operated

PC* = pitch circle

ER-133891 MTS 2.0 base plate 360 x 360 P Universal, pitch 200



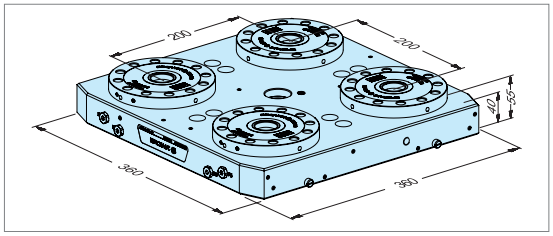

Version	Base plate universal, steel unhardened, pitch 200mm. Including adapter flange with air boreholes.
Connections	3 pneumatic connections, laterally and from underneath on PC* ø57mm: for opening, reclamping and open check.
Option	Customized adapter flange available on request.
Application	To accommodate multiple pallets. For direct assembly on machine tables.
Mounting	Mounting hole pattern for grid 50mm/M12 and for machine tables with T-slot distances of 63 and 100mm.

ER-133896 MTS 2.0 base plate 410 x 410 P Universal, pitch 250



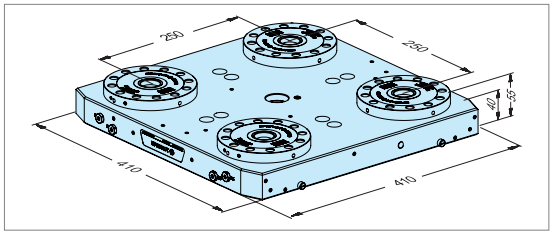

Version	Base plate universal, steel unhardened, pitch 250mm. Including adapter flange with air boreholes.
Connections	3 pneumatic connections, laterally and from underneath on PC* ø57mm: for opening, reclamping and open check.
Option	Customized adapter flange available on request.
Application	To accommodate multiple pallets. For direct assembly on machine tables.
Mounting	Mounting hole pattern for grid 50mm/M12 and for machine tables with T-slot distances of 63 and 100mm.

EROWA MTS 2.0

Base plates, 4-fold, automatable

Technical data	MTS 2.0 base plate universal, 4-fold, pneumatic, pneumatic
Repeatability	< 0.003 mm
Clamping	with spring tension (clamped without pressure)
Opening pressure	min. 6 bar (pneumatic)
Monitoring (Chuck P/A)	open check and combined locking & presence check (pneumatic)
Clamping power	36,000 N (4 x 9,000 N) (spring tension)
with reclamping	80,000 N (4 x 20,000 N)

P = pneumatically operated
A = able to automate

PC* = pitch circle

ER-133890 MTS 2.0 base plate 360 x 360 P/A Universal, pitch 200

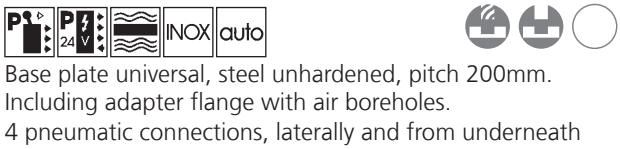

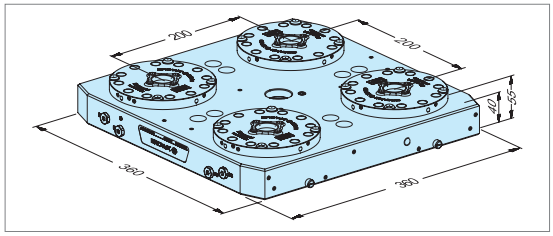

Version	Base plate universal, steel unhardened, pitch 200mm. Including adapter flange with air boreholes.
Connections	4 pneumatic connections, laterally and from underneath on PC* ø57mm: for opening, reclamping, open check and for cleaning/presence check.
Option	Customized adapter flange available on request.
Application	To accommodate multiple pallets. For direct assembly on machine tables.
Mounting	Mounting hole pattern for grid 50mm/M12 and for machine tables with T-slot distances of 63 and 100mm.

ER-133895 MTS 2.0 base plate 410 x 410 P/A Universal, pitch 250

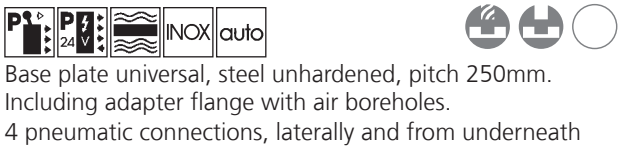

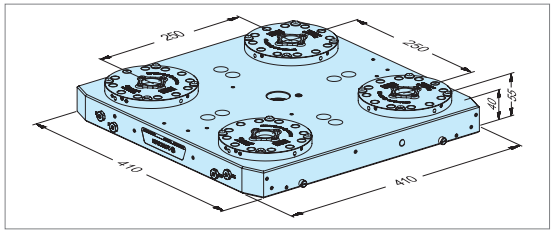

Version	Base plate universal, steel unhardened, pitch 250mm. Including adapter flange with air boreholes.
Connections	4 pneumatic connections, laterally and from underneath on PC* ø57mm: for opening, reclamping, open check and for cleaning/presence check.
Option	Customized adapter flange available on request.
Application	To accommodate multiple pallets. For direct assembly on machine tables.
Mounting	Mounting hole pattern for grid 50mm/M12 and for machine tables with T-slot distances of 63 and 100mm.

EROWA MTS

Pallets - Pitch 160 mm 4-fold

ER-143446	MTS pallet 320 x 320 / 160 Hard Z support

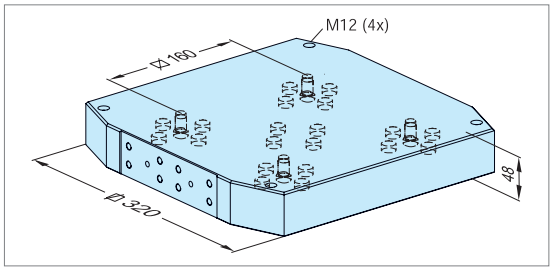

Version	Aluminum pallet, 4-fold, pitch 160 mm. With hard Z support bolt. Excluding chucking spigots.
Application	To clamp workpieces, vises and gauges. Holes to be drilled as required.
Accessories	MTS chucking spigot set ER-041461 (M) or ER-041464 (A) and MTS GripperLink ER-038622.

ER-157207	MTS Adapter pallet PCP automatic 320 x 320 / 160

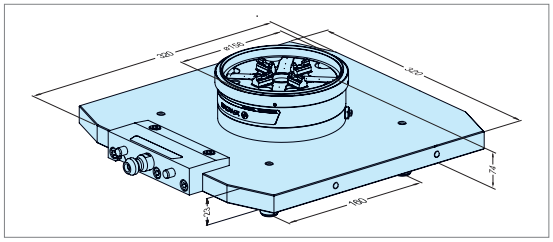

Version	Adapter pallet from MTS to PowerChuck P.
Operation	Automatic control of the PowerChuck P via MTS air couplings of the MTS base plate.
Application	On machines with MTS base plate for holding ITS pallets.
Note	For automatically changing pallets into the MTS base plate and PowerChuck P.

EROWA MTS

Pallets - Pitch 200 mm 2-fold

ER-130135 MTS Alignment pallet 160 x 360 / 200

INOX

Version: Aluminum pallet, 2-fold, with hard Z supports. With ground alignment rail and four Z-measuring surfaces. Including 2 x MTS centering spigot / A.

Application: Alignment of the angle position and determination of the Z-values of 2-fold MTS base plates with pitch 200mm.

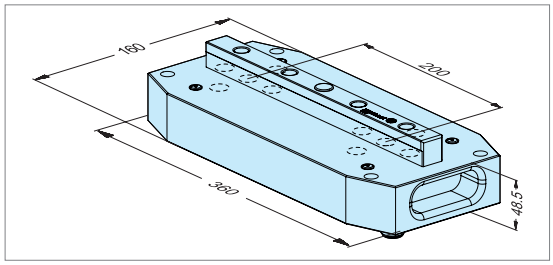

ER-130125 MTS pallet 198 x 398 / 200

Version: Aluminum pallet, 2-fold, pitch 200 mm. Excluding chucking spigots.

Application: To clamp workpieces, vises and gauges. Holes to be drilled as required.

Accessories: MTS chucking spigot set ER-041460.

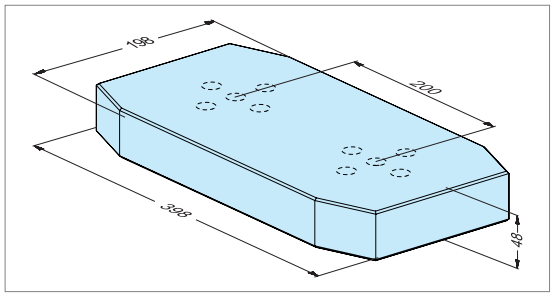

EROWA MTS

Pallets - Pitch 200 mm 4-fold

ER-130137 MTS Alignment pallet 398 x 398 / 200

INOX auto

Version: Aluminum pallet, 4-fold, with hard Z supports. With ground alignment rail and four Z-measuring surfaces. Including MTS chucking spigot set 4 / A-Z.

Application: Alignment of the angle position and determination of the center and Z-values of 4-fold MTS base plates with pitch 200 mm.

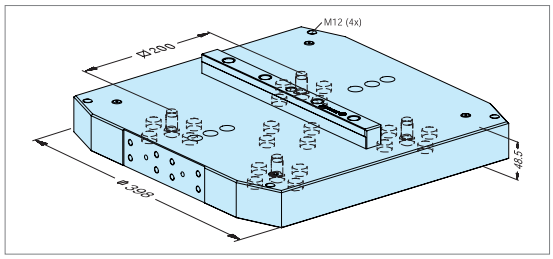

ER-130127 MTS pallet 398 x 398 / 200

auto

Version: Aluminum pallet, 4-fold, pitch 200 mm. Excluding chucking spigots.

Application: To clamp workpieces, vises and gauges. Holes to be drilled as required.

Accessories: MTS chucking spigot set ER-041461 (M) or ER-041464 (A) and MTS GripperLink ER-038622.

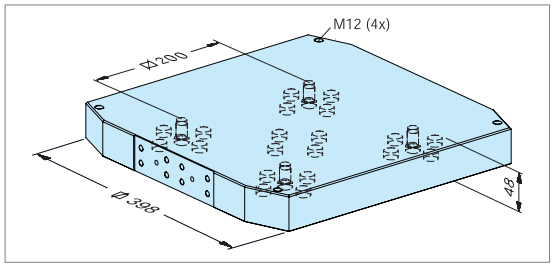

EROWA MTS

Pallets - Pitch 200 mm 4-fold

ER-130129	MTS pallet 398 x 398 / 200 Hard Z support

auto

Version	Aluminum pallet, 4-fold, pitch 200mm. With hard Z-supports. Excluding chucking spigots.
Application	To clamp workpieces, vises and gauges. Holes to be drilled as required.
Accessories	MTS chucking spigot set ER-041461 (M) or ER-041464 (A) and MTS GripperLink ER-038622.

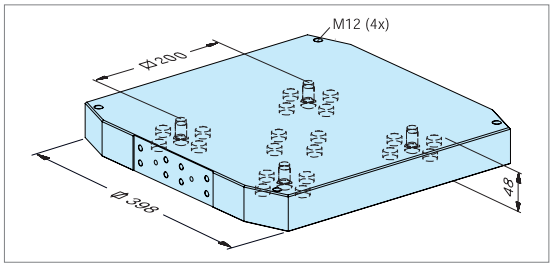

ER-136576	MTS pallet 398 x 398 / 200 Hard Z support / WGS-500 40 mm

auto

Version	Aluminum pallet, 4-fold, pitch 200mm. With hard Z-supports. Excluding chucking spigots.
Application	To clamp workpieces, vises and gauges. Hold grid to be drilled according to requirements.
Accessories	MTS chucking spigot set ER-041461 (M) or ER-041464 (A), as well as GripperLink WGS-500 40mm, ER-094828.

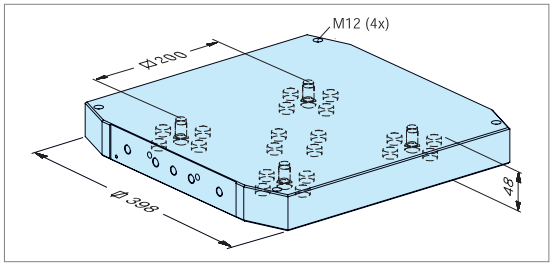

ER-130128	MTS pallet 398 x 398 / 200 R50

auto

Version	Aluminum pallet (hard-anodized), 4-fold, pitch 200mm. With grid 50mm/M12. Excluding chucking spigots.
Application	To clamp workpieces, vises and gauges.
Accessories	MTS chucking spigot set ER-041461 (M) or ER-041464 (A) and MTS GripperLink ER-038622.

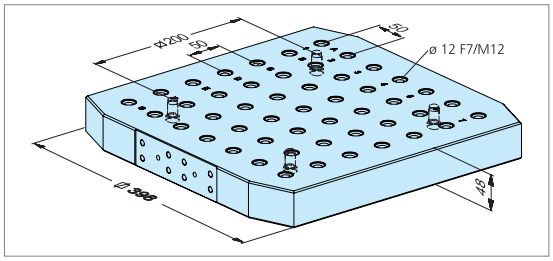

ER-130141	MTS pallet 398 x 398 / 200 CleverClamp mono

auto

Version	Aluminum pallet, 4-fold, pitch 200mm. With hard Z-supports and 1 x CleverClamp rail 398. Excluding chucking spigots.
Application	Optimal accessibility for 5-axis machining with single and multiple part clamping.
Accessories	MTS chucking spigot set ER-041461 (M) or ER-041464 (A).

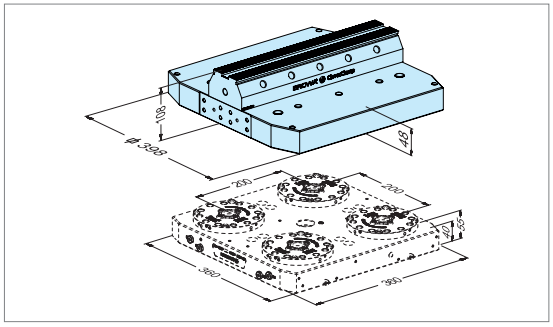

ER-130140	MTS pallet 398 x 398 / 200 CleverClamp duo

auto

Version	Aluminum pallet, 4-fold, pitch 200mm. With hard Z supports and 2 x CleverClamp rail 398. Excluding chucking spigots.
Application	Optimal accessibility for 5-axis machining with single and multiple part clamping.
Accessories	MTS chucking spigot set ER-041461 (M) or ER-041464 (A).

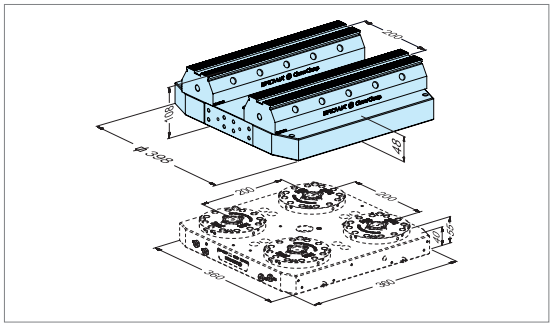

ER-138658 MTS Adapter pallet PCP automatic 360 x 360 / 200

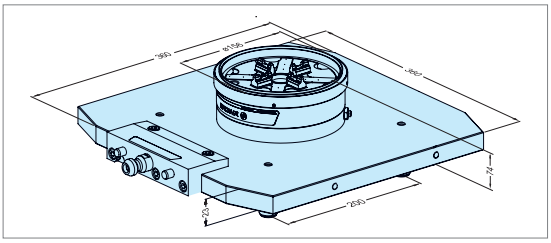

Version	Adapter pallet from MTS to PowerChuck P.
Operation	Automatic control of the PowerChuck P via MTS air couplings of the MTS base plate.
Application	On machines with MTS base plate for holding ITS pallets.
Note	For automatically changing pallets into the MTS base plate and PowerChuck P.

ER-169341 MTS Adapter pallet VPC 52 automatic 360 x 360 / 200 with changeover valve

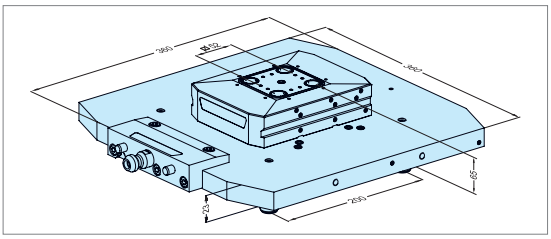

Version	Adapter pallet from MTS to VPC.
Operation	Automatic control of the VPC via MTS air couplings of the MTS base plate.
Application	On machines with MTS base plate for holding vises, fixtures and workpieces with pitch dimension 52.
Note	For automatic changing of pallets, vices, fixtures and workpieces with pitch dimension 52 into the MTS base plate and VPC.

ER-169342 MTS Adapter pallet VPC 96 automatic 360 x 360 / 200 with changeover valve

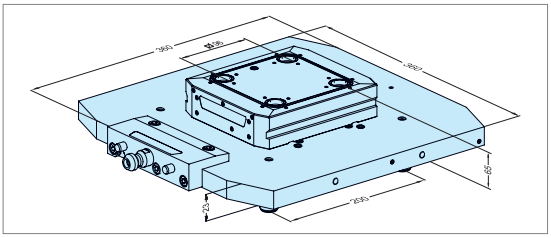

Version	Adapter pallet from MTS to VPC.
Operation	Automatic control of the VPC via MTS air couplings of the MTS base plate.
Application	On machines with MTS base plate for holding vises, fixtures and workpieces with pitch dimension 96.
Note	For automatic changing of pallets, vices, fixtures and workpieces with pitch dimension 96 into the MTS base plate and VPC.

ER-143875 MTS pallet 398 x 398 / 200 FD Z-support hard

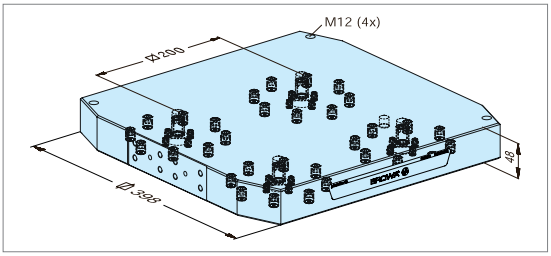

Version	Aluminum pallet, 4-fold, pitch 200 mm. With hard Z supports. Excluding MTS chucking spigots FD.
Application	To clamp workpieces, vises and gauges. Holes to be drilled as required.
Accessories	MTS chucking spigot set 4/ A-Z-FD Type 1 ER-171025, GripperLink RCS 45 mm ER-038622 and counter weight ER-146556.
Compatibility	MTS (up to max. 80 min^{-1}), MTS 2.0, MTS 3.0, MTS 4.0.

EROWA MTS

Pallets - Pitch 250 mm 2-fold

ER-130136 MTS Alignment pallet 198 x 398 / 250

INOX

Version	Aluminum pallet, 2-fold, with hard Z-supports. With ground alignment rail and four Z-measuring surfaces. Including 2 x MTS centering spigot / A.
Application	Alignment of the angle position and determination of the Z-values of 2-fold MTS base plates with pitch 250 mm.

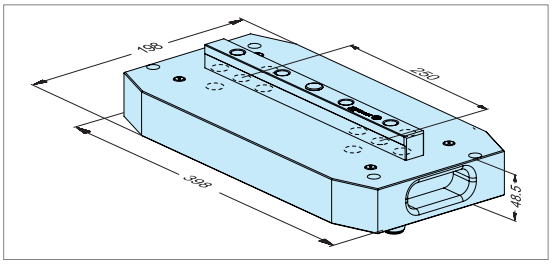

ER-130126 MTS pallet 198 x 398 / 250

Version	Aluminum pallet, 2-fold, pitch 250mm. Excluding chucking spigots.
Application	To clamp workpieces, vises and gauges. Holes to be drilled as required.
Accessories	MTS chucking spigot set ER-041460.

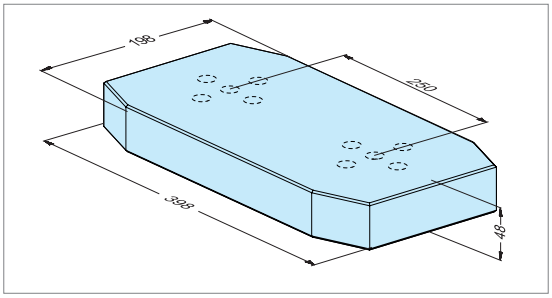

EROWA MTS

Pallets - Pitch 250 mm 4-fold

ER-130138 MTS Alignment pallet 398 x 398 / 250

INOX auto

Version	Aluminum pallet, 4-fold, with hard Z-supports. With ground alignment rail and four Z-measuring surfaces. Including MTS chucking spigot set 4 / A-Z.
Application	Alignment of the angle position and determination of the center and Z-values of 4-fold MTS base plates with pitch 250 mm.

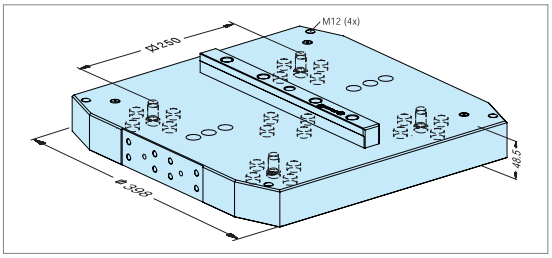

ER-130130 MTS pallet 398 x 398 / 250

auto

Version	Aluminum pallet, 4-fold, pitch 250 mm. Excluding chucking spigots.
Application	To clamp workpieces, vises and gauges. Holes to be drilled as required.
Accessories	MTS chucking spigot set ER-041461 (M) or ER-041464 (A) and MTS GripperLink ER-038622.

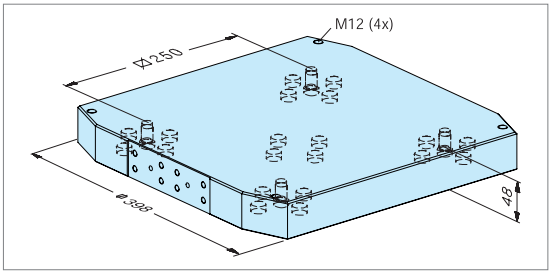

EROWA MTS

Pallets - Pitch 250 mm 4-fold

ER-130132 MTS pallet 498 x 498 / 250

auto

Version: Aluminum pallet, 4-fold, pitch 25 0mm. Excluding chucking spigots.
Application: To clamp workpieces, vises and gauges. Holes to be drilled as required.
Accessories: MTS chucking spigot set ER-041461 (M) or ER-041464 (A) and MTS GripperLink ER-038622.)

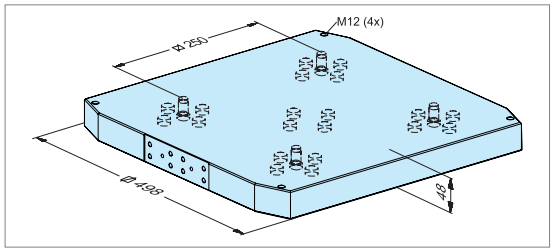

ER-130131 MTS pallet 398 x 398 / 250
Hard Z support

auto

Version: Aluminum pallet, 4-fold, pitch 250 mm. With hard Z-supports. Excluding chucking spigots.
Application: To clamp workpieces, vises and gauges. Holes to be drilled as required.
Accessories: MTS chucking spigot set ER-041461 (M) or ER-041464 (A) and MTS GripperLink ER-038622.

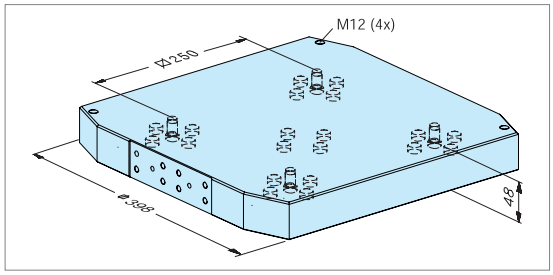

ER-130134 MTS pallet 498 x 498 / 250
Hard Z support

auto

Version: Aluminum pallet, 4-fold, pitch 250 mm. With hard Z supports. Excluding chucking spigots.
Application: To clamp workpieces, vises and gauges. Holes to be drilled as required.
Accessories: MTS chucking spigot set ER-041461 (M) or ER-041464 (A) and MTS GripperLink ER-038622.

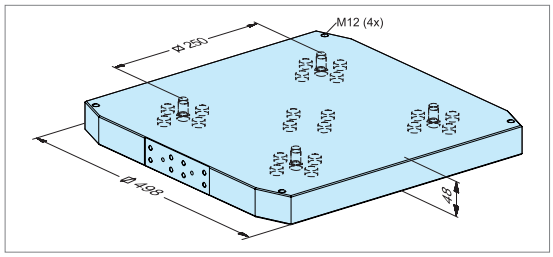

ER-136578 MTS pallet 398 x 398 / 250
Hard Z support / WGS-500 40 mm

auto

Version: Aluminum pallet, 4-fold, pitch 250 mm. With hard Z-supports. Excluding chucking spigots.
Application: To clamp workpieces, vises and gauges. Hole grid to be drilled according to requirements.
Accessories: MTS chucking spigot set ER-041465 (M) or ER-041464 (A), as well as GripperLink WGS-500 40 mm, ER-094828.

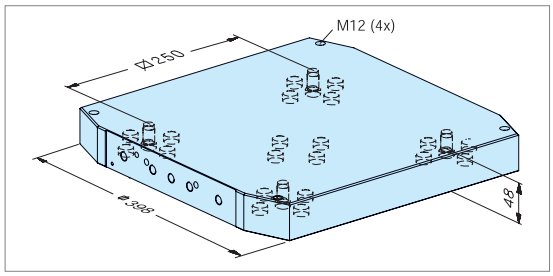

ER-136757 MTS pallet 498 x 498 / 250
Hard Z support / WGS-500 40 mm

auto

Version: Aluminum pallet, 4-fold, pitch 250 mm. With hard Z-supports. Excluding chucking spigots.
Application: To clamp workpieces, vises and gauges. Hole grid to be drilled according to requirements.
Accessories: MTS chucking spigot set ER-041461 (M) or ER-041464 (A), as well as GripperLink WGS-500 40 mm, ER-094828.

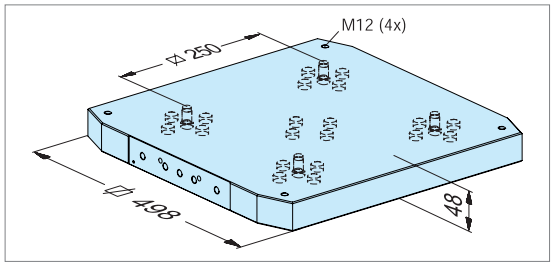

EROWA MTS

Pallets - Pitch 250 mm 4-fold

ER-136793 MTS pallet 498 x 498 x 57 / 250 Hard Z support / WGS-500 56 mm

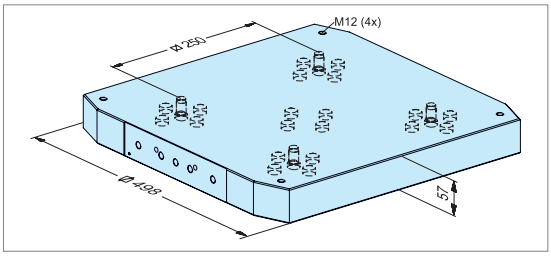

Version	Aluminum pallet, 4-fold, pitch 250 mm. With hard Z-supports. Excluding chucking spigots.
Application	To clamp workpieces, vises and gauges. Hold grid to be drilled according to requirements.
Accessories	MTS chucking spitot-sets ER-041461 (M) or ER-041464 (A), as well as GripperLink WGS-500 56 mm, ER-104344.

ER-130133 MTS pallet 498 x 498 / 250 R50

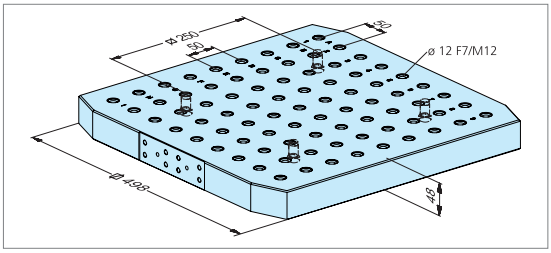

Version	Aluminum pallet (hard-anodized), 4-fold, pitch 250 mm. With grid 50 mm / M12. Excluding chucking spigots.
Application	To clamp workpieces, vises and gauges.
Accessories	MTS chucking spigot set ER-041461 (M) or ER-041464 (A) and MTS GripperLink ER-038622.

ER-130417 MTS pallet 398 x 398 / 250 CleverClamp mono

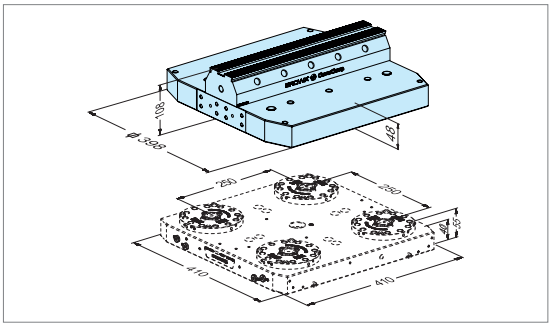

Version	Aluminum pallet, 4-fold, pitch 250 mm. With hard Z-supports and 1 x CleverClamp rail 398. Excluding chucking spigots.
Application	Optimal accessibility for 5-axis machining with single and multiple part clamping.
Accessories	MTS chucking spigot set ER-041461 (M) or ER-041464 (A).

ER-130415 MTS pallet 398 x 398 / 250 CleverClamp duo

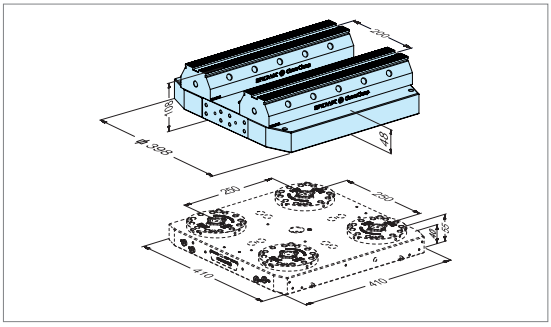

Version	Aluminum pallet, 4-fold, pitch 250 mm. With hard Z supports and 2 x CleverClamp rail 398. Excluding chucking spigots.
Application	Optimal accessibility for 5-axis machining with single and multiple part clamping.
Accessories	MTS chucking spigot set ER-041461 (M) or ER-041464 (A).

ER-150517 MTS Adapter pallet PCP automatic 398 x 398 / 250

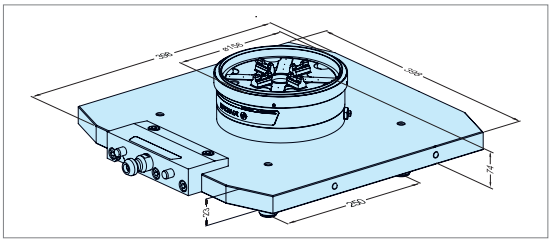

Version	Adapter pallet from MTS to PowerChuck P.
Operation	Automatic control of the PowerChuck P via MTS air couplings of the MTS base plate.
Application	On machines with MTS base plate for holding ITS pallets.
Note	For automatically changing pallets into the MTS base plate and PowerChuck P.

EROWA MTS

Pallets - Pitch 250 mm 4-fold

ER-143876 **MTS pallet 398 x 398 / 250 FD Z-support hard**

auto

Version	Aluminum pallet, 4-fold, pitch 250 mm. With hard Z-supports. Excluding MTS chucking spigots FD.
Application	To clamp workpieces, vises and gauges. Holes to be drilled as required.
Accessories	MTS chucking spigot set 4/ A-Z-FD Type 1 ER-171025, GripperLink RCS 45 mm ER-038622 and counter weight ER-146556.
Compatibility	MTS (up to max. 80 min⁻¹), MTS 2.0, MTS 3.0, MTS 4.0.

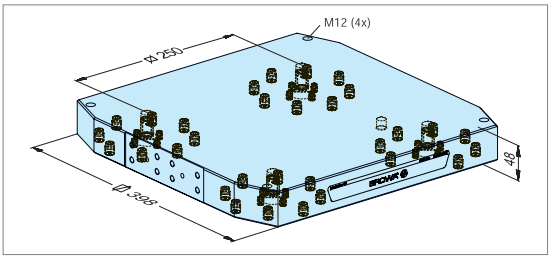

ER-145087 **MTS pallet 498 x 498 / 250 FD Z-support hard**

auto

Version	Aluminum pallet, 4-fold, pitch 250 mm. With hard Z-supports. Excluding MTS chucking spigots FD.
Application	To clamp workpieces, vises and gauges. Holes to be drilled as required.
Accessories	MTS chucking spigot set 4/ A-Z-FD Type 1 ER-171025, GripperLink RCS 45 mm ER-038622 and counter weight ER-146556.
Compatibility	MTS (up to max. 80 min⁻¹), MTS 2.0, MTS 3.0, MTS 4.0.

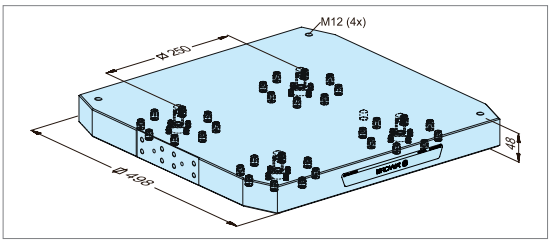

EROWA MTS

Single pallets

ER-138951 **MTS Alignment pallet P ø 148 with MTS chucking spigot P**

INOX auto 148

Version	Pallet P ø 148 with ground alignment rail and four Z-measuring surfaces. Including ER-040999 chucking spigots.
Application	Alignment of the angle position and determination of the center and the Z-values of MTS Single chucks.

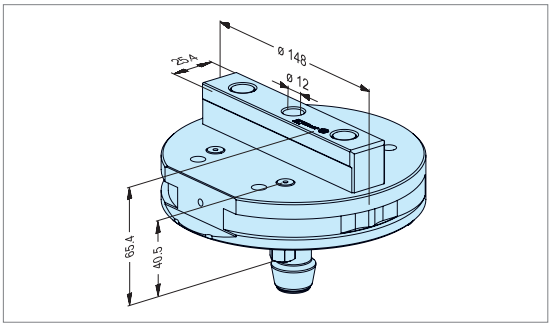

ER-156077 **MTS Pallet ø 148 P blank**

auto 148

Version	Steel pallet, not hardened, including MTS chucking spigot P ER-040999, centering integrated in pallet. With optimized centre of gravity.
Application	For holding workpieces and fixtures in the field of metal-cutting production.
Note	In automatic operation, also use MTS sealing ring ER-045969.

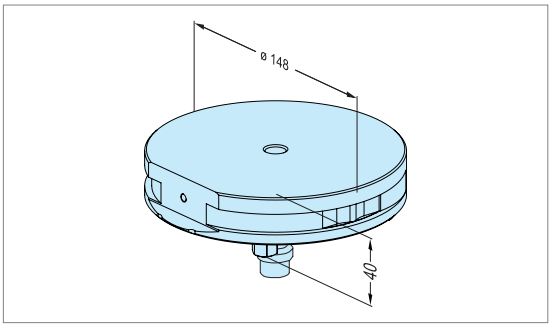

EROWA MTS

Single pallets

ER-033602 MTS pallet ø 148 P blank ALU

Version	Aluminum pallet, fitted with centering plate ER-033600, including MTS chucking spigot ER-039200.
Application	To clamp workpieces and gauges. For manual handling on MTS IntegralChuck Single.

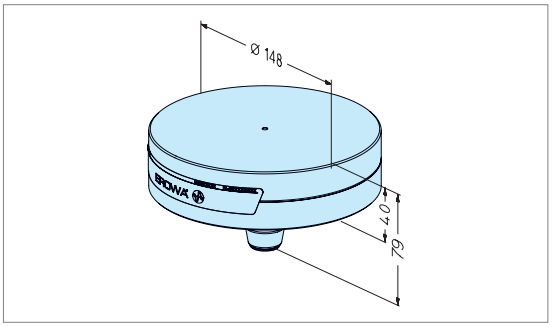

ER-129663 MTS pallet ø 148 P

Version	Steel pallet, not hardened, including MTS chucking spigot P ER-040999, centering integrated in pallet. With optimized centre of gravity.
Application	For holding workpieces and fixtures in the field of metal-cutting production.
Fitting a blank	Through the pallet with M8 bolts or through the blank with M10 bolts.
Note	In automatic operation, also use MTS sealing ring ER-045969.

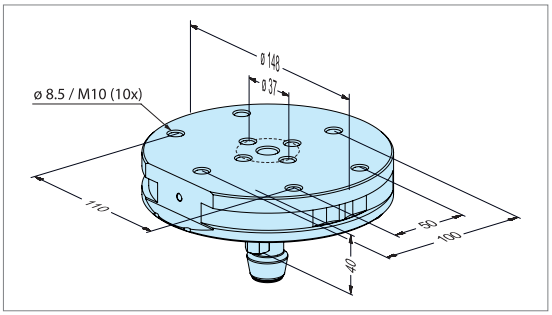

ER-033600 MTS centering plate P

Version	Steel, including attachment bolts and positioning pins.
Application	For the production of customized and indexable MTS pallets. For manual handling on MTS IntegralChuck Single.
Accessories	Chucking spigot ER-039200 to be ordered separately.

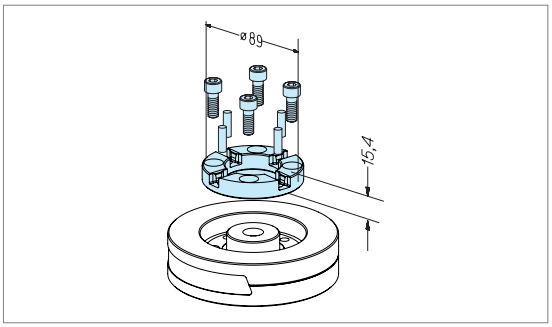

ER-040999 MTS chucking spigot P 1 piece

Version	MTS chucking spigot, including attachment bolt and protective cap.
Application	To be mounted on pallets ø 148 P.
Note	In automatic operation additionally use MTS sealing ring ER-045969.

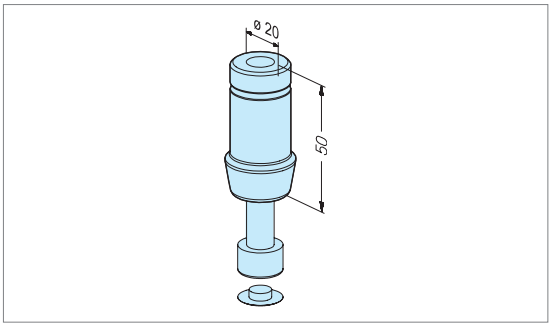

EROWA MTS

Chucking spigots

MTS centering spigot:
ER-033800 MTS centering spigot
ER-038000 MTS centering spigot / A
The **centering spigot** defines the datum point (free of play).

MTS chucking spigot:
ER-039200 MTS chucking spigot / A
Chucking spigot without centering function.

MTS compensation spigot:
ER-039201 MTS compensation spigot / A
The **compensation spigot** positions the pallet in one axis only (X or Y) and is capable of compensating for a maximum pitch difference of 0.1 mm.

Possible compensation movements

Centering surfaces

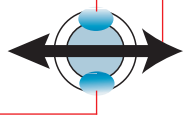

ER-033800 MTS centering spigot

Version: One chucking spigot with centering function (free of play), including attachment bolts (M10x50, M12x55), U-disc and protective caps.

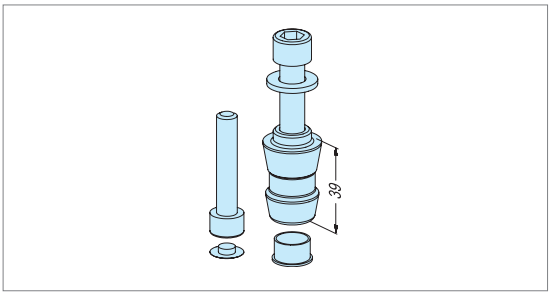

ER-039201 MTS compensation spigot / A

Version: One chucking spigot with compensation function, including attachment bolts (M10x50, M12x55), U–disc and protective caps.

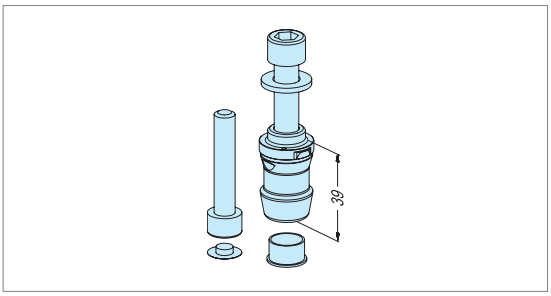

ER-039200 MTS chucking spigot / A

Version: One chucking spigot without centering (centering play 0.1mm), including attachment bolts (M10x50, M12x55), U–disc and protective caps.

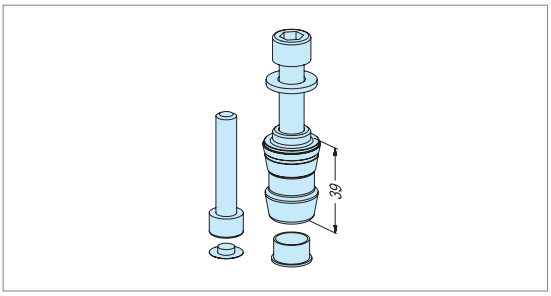

ER-038000 MTS centering spigot / A

Version: One chucking spigot with centering function, including attachment bolts (M10x50, M12x55), U-disc, O-ring and protective caps.

Application: For MTS pallets which are loaded/unloaded automatically. The centering spigot defines the datum point and closes the cleaning boreholes in the MTS Chucks / A.

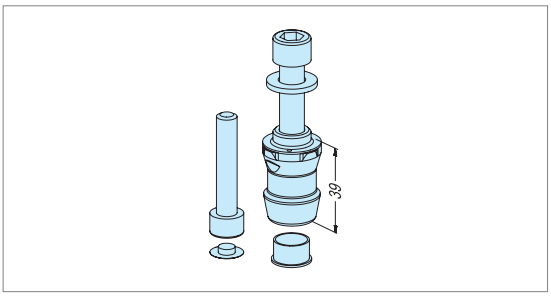

EROWA MTS

Chucking spigot set

ER-041460 MTS chucking spigot set 2

Version 1 centering spigot, 1 compensation spigot / A.
Mounting With the bolts supplied through the pallet or through the chucking spigot.

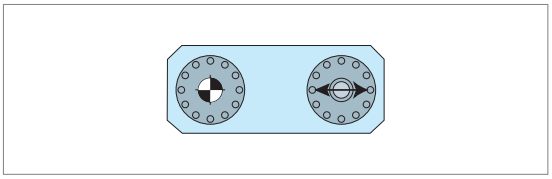

ER-041461 MTS chucking spigot set 4

Version 1 centering spigot, 1 compensation spigot / A, 2 chucking spigots / A.
Mounting With the bolts supplied through the pallet or through the chucking spigot.

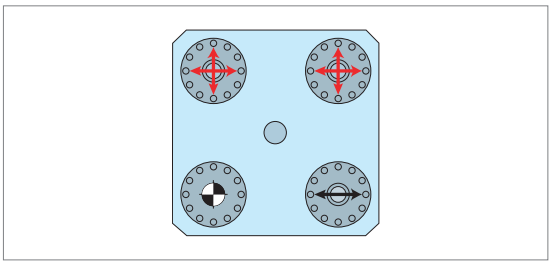

ER-041464 MTS chucking spigot set 4 / A

Version 1 centering spigot / A, 1 compensation spigot / A, 2 chucking spigots / A.
Mounting With the bolts supplied through the pallet or through the chucking spigot.

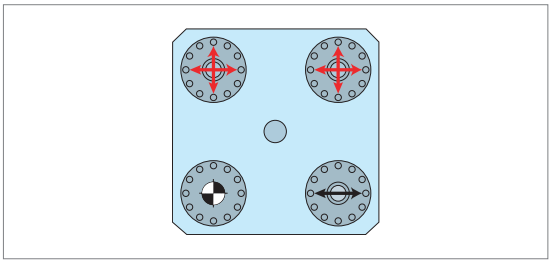

ER-062465 MTS chucking spigot set 4 / A-Z

Version 4 centering spigots / A.
Application Basically for 5-axis machining.
Mounting With the bolts supplied, through the pallet, or through chucking spigots.

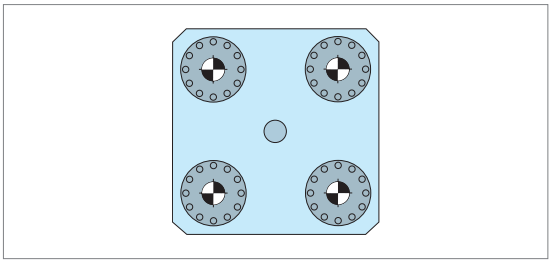

ER-171025 MTS chucking spigot set 4/ A-Z-FD Type 1 Fastening from below with spec. M12 bolt

Application Primarily for rotary applications such as mill-turn machining and 5-axis machining.
Version 4x MTS centering spigots A-Z-FD, including special bolt
Mounting On the underside of the pallet - no fastening possible from above through the pallet.
Note The centering spigots FD can be used with pallets FD with MTS 2.0, MTS 3.0 and MTS 4.0.

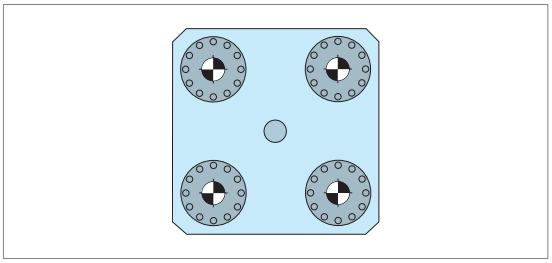

ER-171026 MTS chucking spigot set 4/ A-Z-FD Type 2 Fastening from top with special M12 Nut

Application	Primarily for rotary applications such as mill-turn machining and 5-axis machining.
Version	4x MTS centering spigots A-Z-FD, including special nut and washer. Without fixing screw M12.
Mounting	From above through pallet - no fastening from below possible.
Note	The centering spigots FD can be used with pallets FD with MTS 2.0, MTS 3.0 and MTS 4.0.

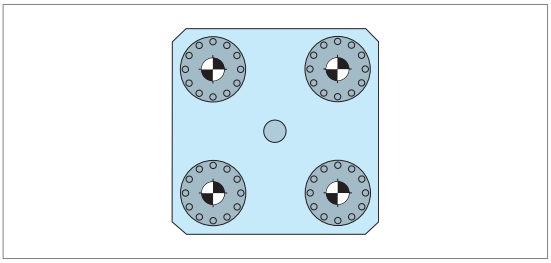

ER-041462 MTS chucking spigot set 6

Version	1 centering spigot, 1 compensation spigot / A, 4 chucking spigots / A.
Mounting	With the bolts supplied through the pallet or through the chucking spigot.

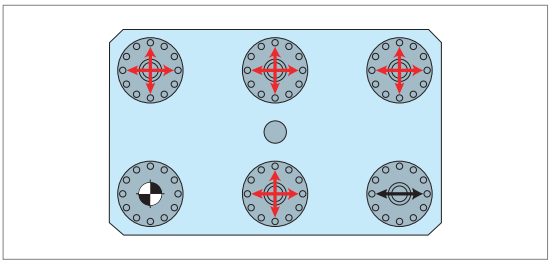

ER-054710 MTS Chucking spigot set 6 / A

Version	1 centering spigot / A, 1 compensation spigot / A, 4 chucking spigots / A.
Mounting	With the bolts supplied through the pallet or through the chucking spigot.

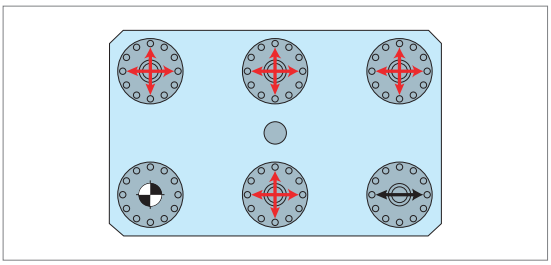

ER-041463 MTS chucking spigot set 8

Version	1 centering spigot, 1 compensation spigot / A, 6 chucking spigots / A.
Mounting	With the bolts supplied through the pallet or through the chucking spigot.

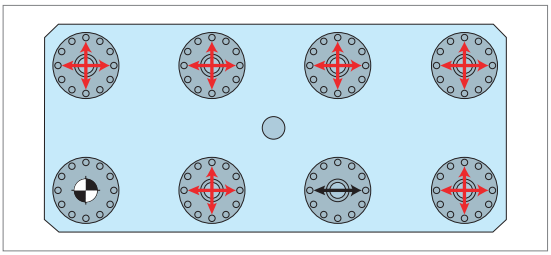

EROWA MTS

Operation

ER-157413 Control box 1-fold with booster

Version	Manual control box for 1 chuck. Integrated booster with a maximum loading ratio of 1:2. To control the opening / reclamping / cleaning functions. Pressure adjustable, display through a manometer. Includes a set of tubes.
Connections	1 input (P IN) and 3 outputs (P2 Open / P3 Clean / P4 Reclamp).
Application	To operate chuck types ITS, ITS Compact, CombiChuck, PowerChuck P, VPC, UPC or PM Tooling.

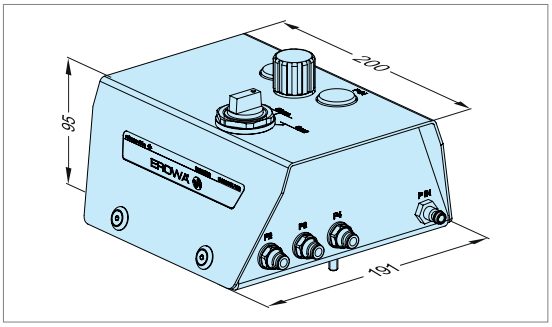

ER-157411 Control box 2-fold

Version	Manual control box for a maximum of 2 chucks. To control the opening / reclamping / cleaning functions. Pressure adjustable. Includes a set of tubes.
Connections	1 input (P IN) and 4 outputs (P2 Open / P2.2 Open P3 Clean / P4 Reclamp).
Application	To operate chuck types ITS, ITS Compact, CombiChuck, PowerChuck P, VPC, UPC or PM Tooling.

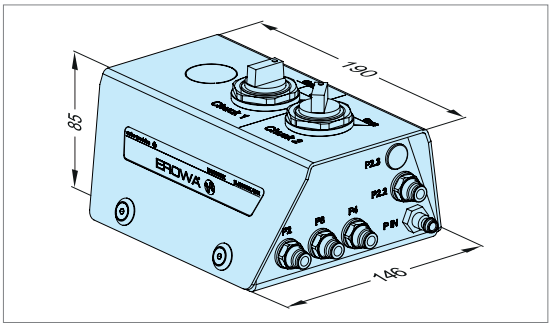

ER-136200 MTS 2.0 manual control unit

Version	Manual control unit for MTS 2.0 chucks. With connections for all functions. Indication of open control via manometer or electrical signal possible.
Application	Operation of MTS 2.0 chucks.

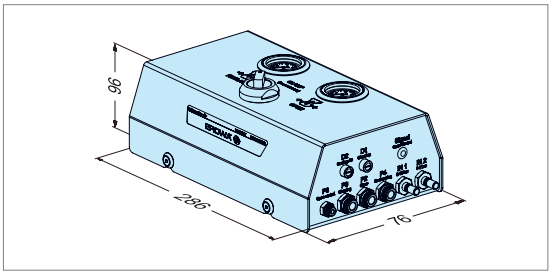

ER-157409 Booster box

Version	Booster with a maximum loading ratio of 1:2. Pressure adjustable, display through a manometer.
Connections	1 input (P IN) and 2 outputs (P OUT High (boosted) / P OUT Low (network pressure)). All connections with fast couplings for tube inside ø 8 mm.
Application	To ensure the required pneumatic pressure in case of deficient network pressure and pressure fluctuations.
Please note	To be integrated in the air circuit near the user.

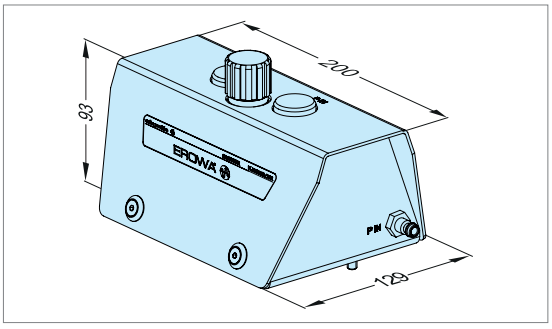

ER-001846 Air jet

Version	Plastic, smooth regulation of air flow, connection 1/4'', inside thread.
Application	Operation of manual chucks.
Note	Not suitable for operating MTS+ and MTS81.
Option	Volume and pressure reduction to air jet (ER-087668). Pressure build up is reduced if Air Jet is not pushed against an air valve.

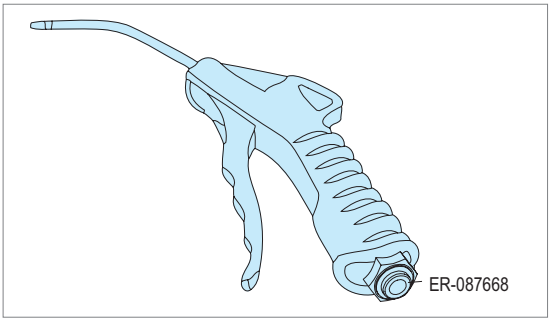

ER-034820 MTS air coupling base plate 1 piece
ER-034822 MTS air coupling pallet 1 piece

Application	The MTS air coupling ER-034820 combined with the MTS air coupling ER-034822 serves as a pneumatic interface between MTS base plates (A) and MTS pallets (B).
For use	with compressed air.
Working pressure	max. 10 bar.

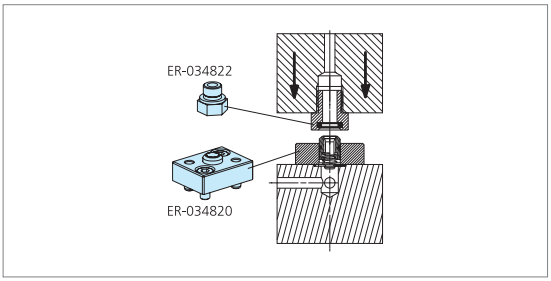

ER-044426 Nipple for MTS base plates
ER-044428 Coupling for MTS pallets

Application	The coupling for MTS pallets ER-044428, in combination with the nipple for MTS base plates ER-044426, serves as an interface for the medium connection between MTS base plates (A) and MTS pallets (B).
For use	with compressed air, with vacuum, with oil / hydraulic.
Working pressure	max. 300 bar.
Important	Docking- and undocking only depressurized.

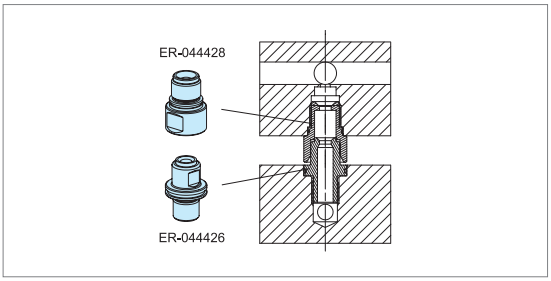

ER-034168 MTS Connector block 1/8" double

Version	Connector block made of steel, excluding attachment bolts.
Application	To receive pneumatic and hydraulic threaded connectors, nipples and couplings.

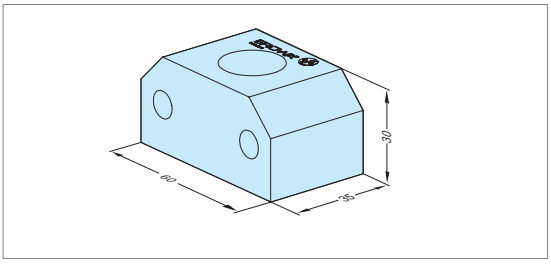

EROWA MTS

Accessories

ER-042038 MTS cover

Version	Aluminum cover, anodized. Suitable for MTS and MTS 2.0 chucks.
Application	Protects MTS and MTS 2.0 chucks that are not in use from chips and coolant.

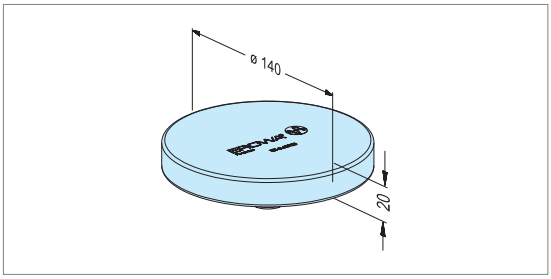

ER-070064 MTS Sealing pallet ø 136/A

Version	Rust-resistant cover for the hermetical sealing of MTS chucks that are not in use.
Note	Support surface must be clean and must be protected against damage.

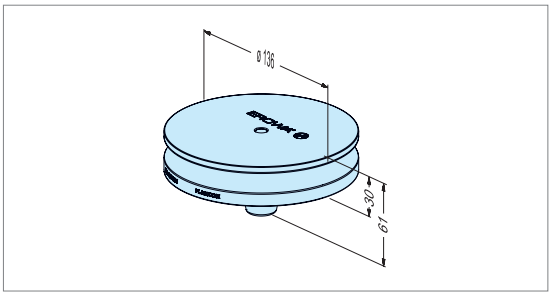

ER-150696 MTS Chip guard low automatic

Version	Aluminum, anodized
Application	The MTS chip guard serves to seal the automatic MTS chucks and pase plates when MTS pallets are used.
Note	The MTS chip guard low cannot be combined with the MTS pallet P ø 148 INOX (ER-129663).

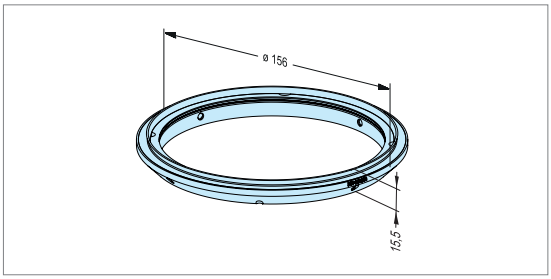

ER-056879 MTS Chip guard ø 156 with axial deaeration

Application	For use with MTS pallet P ø 148 (ER-129663). Prevents dirt and chips from penetrating into the MTS SingleChuck

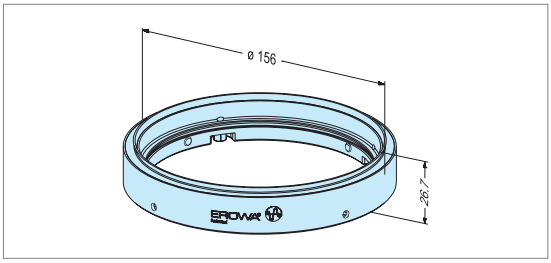

ER-145286 MTS seal frame set / 160
ER-049041 MTS seal frame set / 200
ER-163634 MTS seal frame set / 250

Version	Aluminum anodized, with seal NBR.
Application	The MTS seal frame set serves to protect MTS chucks against dirt and liquids when in use with an EROWA MTS pallet.

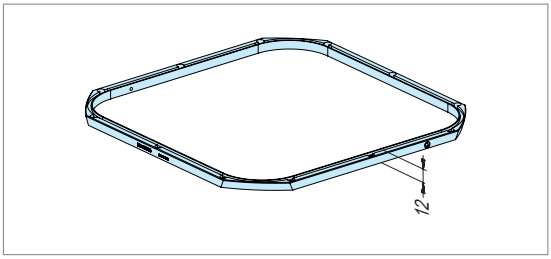

ER-162994	**MTS seal / 160 for MTS base plate 320 x 320 mm**
ER-075393	**MTS seal / 200 for MTS base plate 360 x 360 mm**
ER-071604	**MTS seal / 250 for MTS base plate 410 x 410 mm**

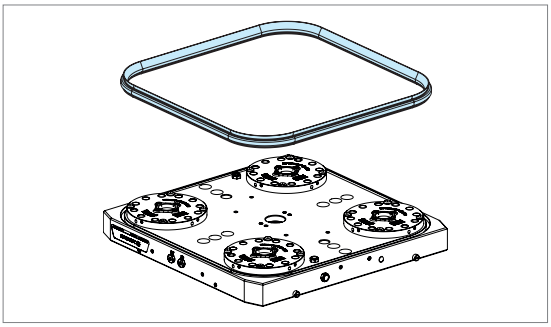

Version FPM (Viton).
Application Prevents dirt from penetrating into MTS base plate.
Note The MTS base plate must have, or be equipped with, the groove to accommodate the seal.

ER-037967	**MTS Locking bolt with M6**

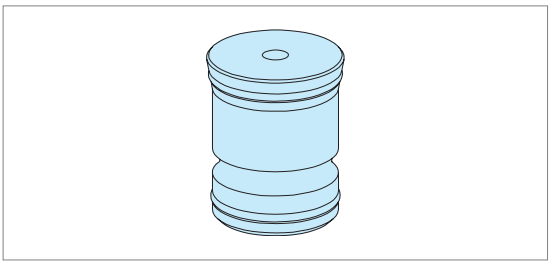

Version Steel.
Application To plug the central borehole in MTS, MTS 2.0 and MTS 81 chucks.

ER-067563	**Rubber seal MTS ø25 x 17 mm for EDM**

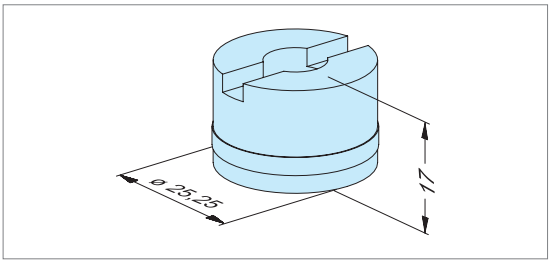

Version Rubber seal.
Note Assembly according to operating instructions. Prevents liquid from penetrating from below into the MTS chuck.

ER-045969	**MTS sealing ring for chucking spigot P**

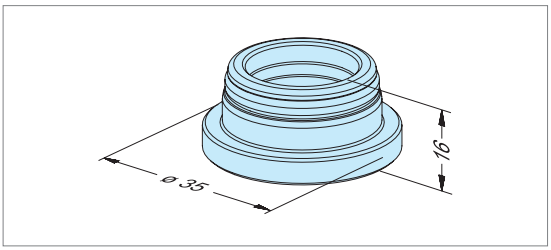

Version Plastic.
Application Used in combination with the MTS chucking spigot P ER-040999 for sealing MTS chucks.

EROWA MTS

Accessories

ER-060391 MTS Set Z-support bolt set for 4-part pallet

Version Steel, hardened.
Application The Z-support bolts (1, 2) serve as Z-support surface for custo-mized MTS pallets.

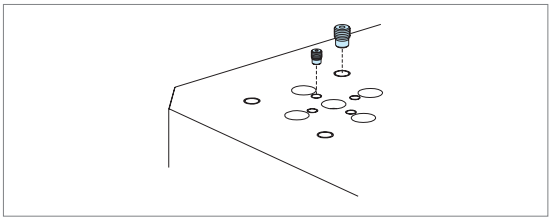

ER-038622 GripperLink RCS 45 mm

Version Coupling for MTS pallets, mounting accessories included.
Application Suited for MTS pallets to be used on EROWA handling devices with the «RCS» coupling system.

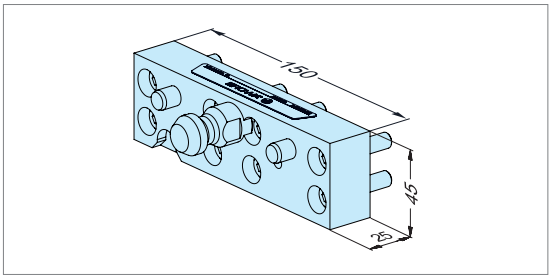

ER-178755 Counterweight for GripperLink RCS 45 mm For FD Applications

auto

Version Steel counterweight, incl. mounting kit.
Application For mill turn application. For mounting on MTS pallet FD, which is equipped with GripperLink RCS 45 mm (ER-038622).

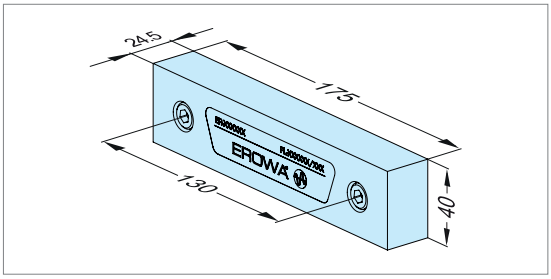

ER-153775 GripperLink WGS-500 40 mm without air ducts

Version Coupling kit incl. screw set, for mounting on MTS or UPC pallets.
Application For pallets on EROWA handling units that are equipped with the WGS-500 exchange gripper system.

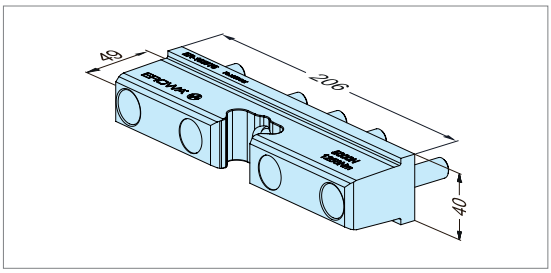

ER-153774 GripperLink WGS-500 40 mm with air ducts

Version Coupling kit incl. screw set, for mounting on MTS or UPC pallets.
Application For pallets on EROWA handling units that are equipped with the WGS-500 exchange gripper System.
Connections 4 AirDock valves, e.g. to conrol additional grippers.

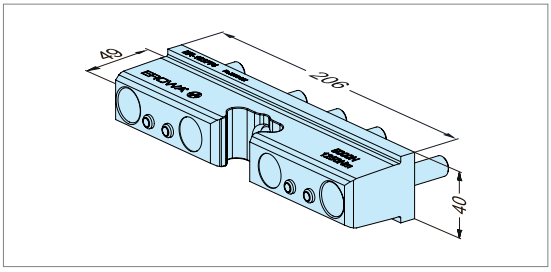

ER-178771 Counterweight for GripperLink WGS 40mm for FD Applications

auto

Version	Steel counterweight, incl. mounting kit
Application	For mill turn application. For mounting on MTS pallet FD, which is equipped with GripperLink WGS-500 40 mm (ER-094828, ER-153775, ER-096633 or ER-153774).

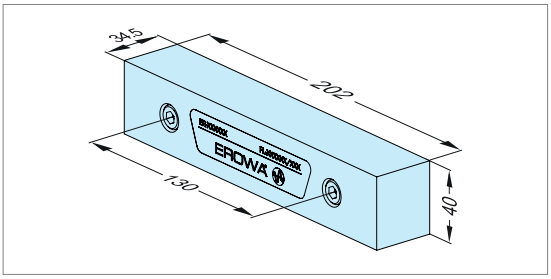

ER-153777 GripperLink WGS-500 56 mm without air ducts

Version	Coupling kit, including set of bolts, to fit to MTS pallet of 57mm height.
Application	For pallets on EROWA handling facilities equipped with the WGS-500 exchange gripper system.

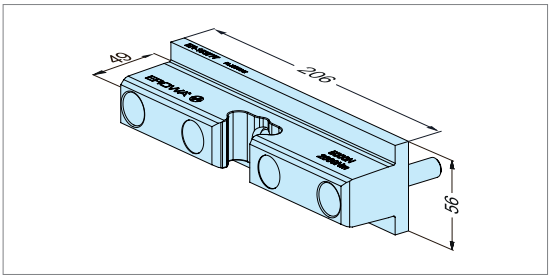

ER-153776 GripperLink WGS-500 56 mm with air ducts

Version	Coupling kit, including set of bolts, to fit to MTS pallet of 57mm height.
Version	For pallets on EROWA handling facilities equipped with the WGS-500 exchange gripper system.
Connections	4 AirDock valves, for instance to control additional grippers.

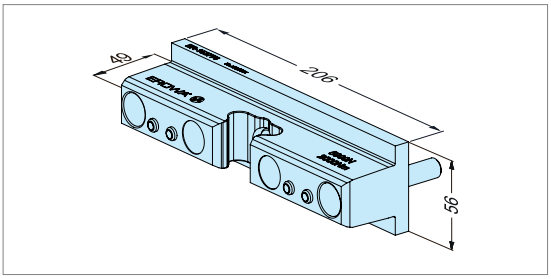

ER-178782 Counterweight for GripperLink WGS 56mm For FD Applications

auto

Version	Steel counterweight, incl. mounting kit.
Application	For milling and turning applications. For mounting on the MTS FD pallet, which is equipped with a GripperLink WGS-500 56 mm (ER-104344, ER-153777, ER-104343, or ER-153776).

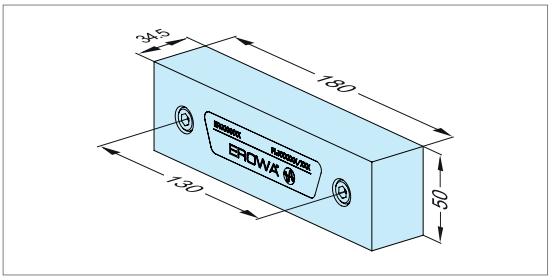

EROWA MTS

Accessories

ER-035294 **EWIS™ Rapid chip with chip holder RCS with chip ø 3 x 13.5mm**

Version Holder with built-in data carrier. EWIS chip: read only.
Application To build into RCS coupling, PalletSet W holder and Basic WEDM holder.

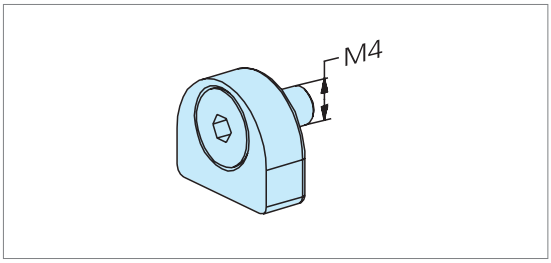

ER-094168 **EWIS™ rapid chip with holder SW14 Length 8mm (grey)**

Version Sleeve fitting with built-in data carrier.
EWIS Rapid chip: read only.
Application In any EROWA electrode holder and pallet which has been prepared for it.

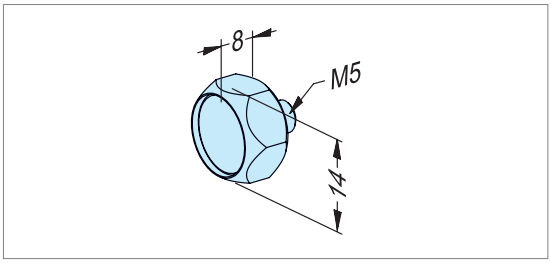

ER-033804 **MTS ring bracket**

Version Bracket made of steel, excluding attachment bolts.
Application Suitable for MTS chucks only. To attach mounted MTS chucks to the machine table.

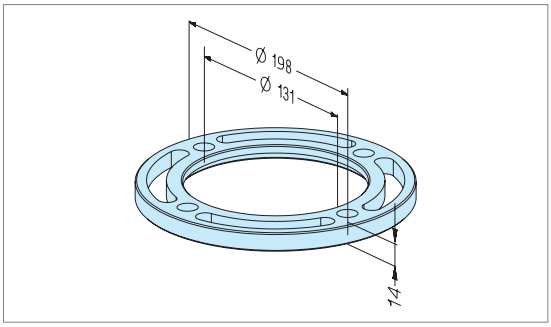

ER-061558 MTS 81 Repair Kit

Version	All the wearing parts for MTS 81 IntegralChuck.
Application	Repair Kit.
Note	Repair or conversion in accordance with the operating instructions supplied.

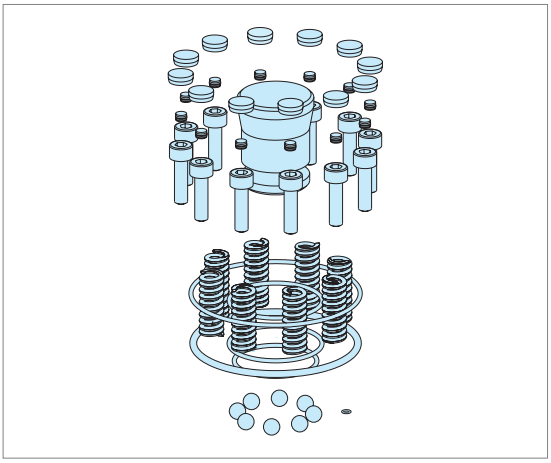

ER-140935 MTS repair set pneumatic with ceramic balls

Version	All wear parts for pneumatic MTS chucks.
Application	Repair kit for pneumatic MTS chucks.
Note	Repair or conversion in accordance with the operating instructions supplied. Compatible with: ER-033402, ER-036802, ER-033400, ER-036800, ER-131200, ER-131210, ER-131220 and ER-131230.

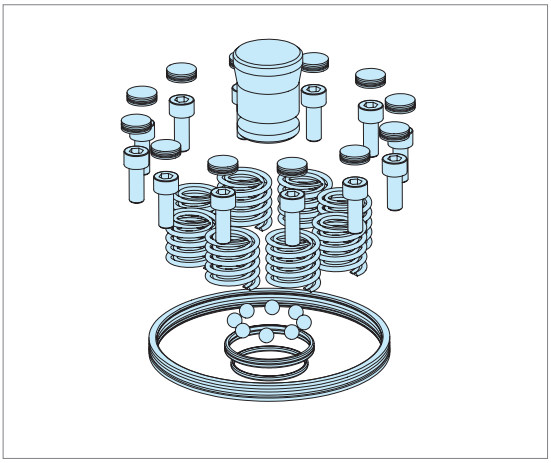

ER-108204 MTS 2.0 repair set pneumatic

Version	All the wearing parts for MTS 2.0 chuck.
Application	Repair Kit.
Note	Repair or conversion in accordance with the operating instructions supplied.

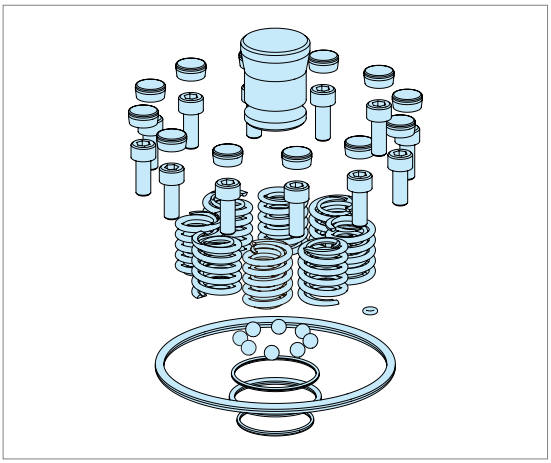

EROWA MTS

Accessories

ER-014326 Straight threaded connector 3101 06 10 ø6 / G1/8

Application Pneumatic.



ER-002814 Angled connector 3199 06 10

Application Pneumatic.



ER-014366 Threaded T-connector 3198 06 10

Application Pneumatic.



ER-014333 T-connector

Application Pneumatic.



ER-034095 Cross-connector

Application Pneumatic.



ER-002023 Pneumatic tubing ø 6 / 4 black Legris 1100 U06 01

Application Pneumatic. Max. operating pressure: 9 bar.
Order unit Meters.



ER-036672 Air gun valve G1/8“

Application Pneumatic. For air jet ER-001846.



ER-002147 Reinforced pipe PMAFlex Co-Flex divisible

Application Hydraulic and pneumatic. Protects tubes ER-033495 and ER-002023 from damage.
Order units Meter.

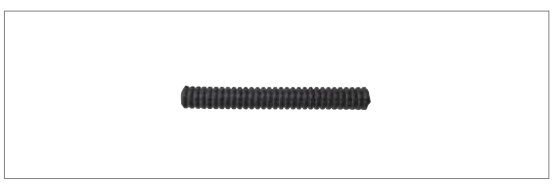

ER-034098 Reduction nipple G1/4" - G1/8"

Application Hydraulic and pneumatic.

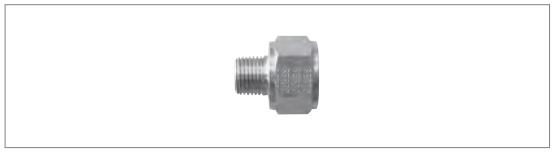

ER-034373 Reduction bushing IG 1/8" - IG 1/8"
AD FA 40-1/8-1/8

Application Hydraulic and pneumatic.



ER-034375 Reduction nipple AG 1/4" - IG 1/8"

Application Hydraulic and pneumatic.



ER-001617 Threaded plug 1/8"
Legris 0220 10 00

Application Hydraulic and pneumatic.



ER-033504 Nipple 1/8"

Application Hydraulic. With blocking device. Fits fast coupling ER-033499.



ER-033499 Rapid-action coupling 1/8" IG

Application Hydraulic. With blocking device. Fits fast nipple ER-033504.



EROWA MTS

Mineral-cast cube for an optimal use of space

The entire working space of the machine is optimally used through the use of mineral-cast cubes. In addition, mineral cast as a basic material has many advantageous properties: Vibration damping is up to ten times better than with gray cast iron. Furthermore, mineral cast has a very high degree of temperature stability. In combination with the ingenious MTS datum point clamping technology, the EROWA mineral-cast cube is a crucial productivity factor.



FACTS

- Standard version or made to measure
- Dampens vibration
- Low heat conductivity
- High degree of precision
- Light as aluminum

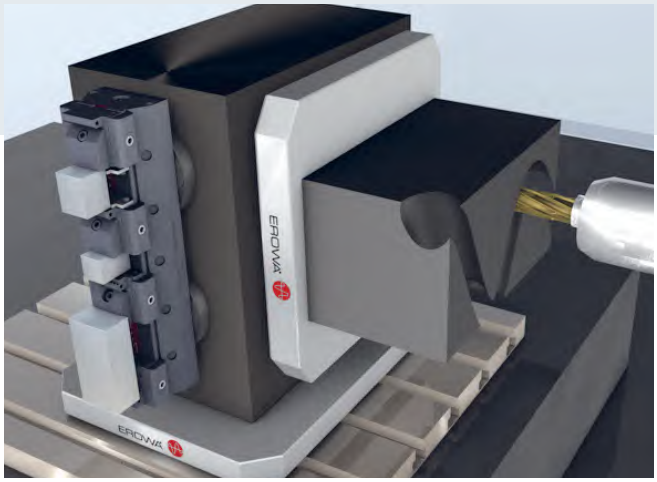

Best possible use of working space for optimal autonomy of the machine.

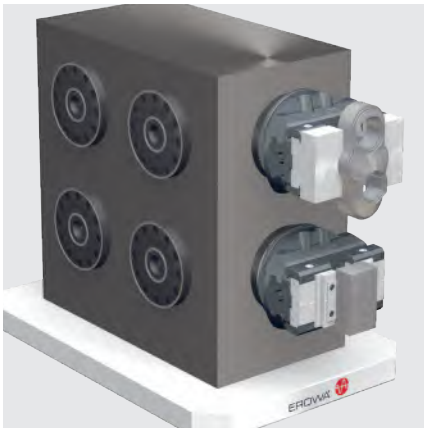

Resetting times are eliminated through the preparation of workpieces on the set-up station outside the machine. To be machined, workpieces are clamped into the MTS datum point tooling system.

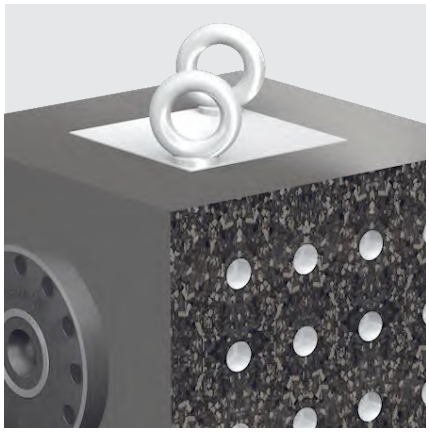

Taking the whole cube from the machine to the set-up station? Simply lift it with the overhead crane.

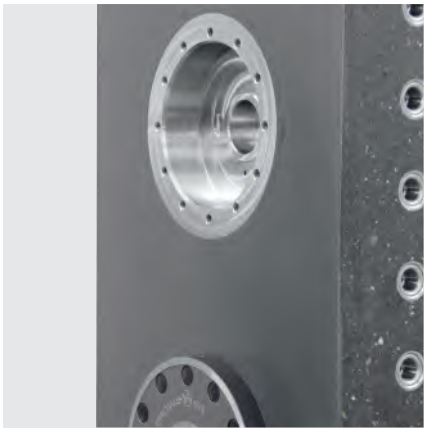

Rust-resistant circular recesses for the MTS clamping modules and inside pneumatic supply for safe operation in the demanding production environment.



The 50mm hole grid system and the matching clamping elements offer an almost unlimited number of fitting options for workpiece carriers.

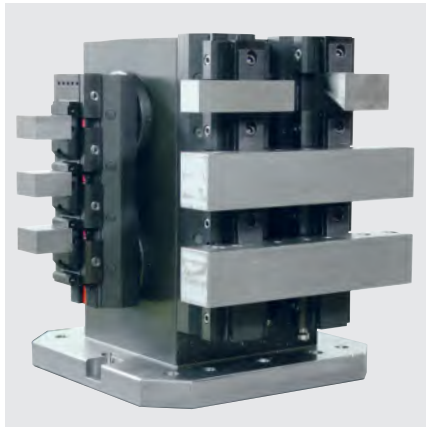

EROWA CleverClamp system in use on the mineral-cast cube. A wide variety of clamping options for various workpiece sizes.



Customized design:
Mineral-cast cube with 16 MTS chucks;
dimensions: 830 mm x 830 mm x 1200 mm.

EROWA UPC

Very precise and extremely robust

The Universal PowerChuck (UPC) clamping system is characterized by high stability and reliability, even with workpieces measuring up to 500 x 500 x 500 mm. With a repeatability of 2 µm, the UPC clamping system leaves no wish unfulfilled also in terms of precision.

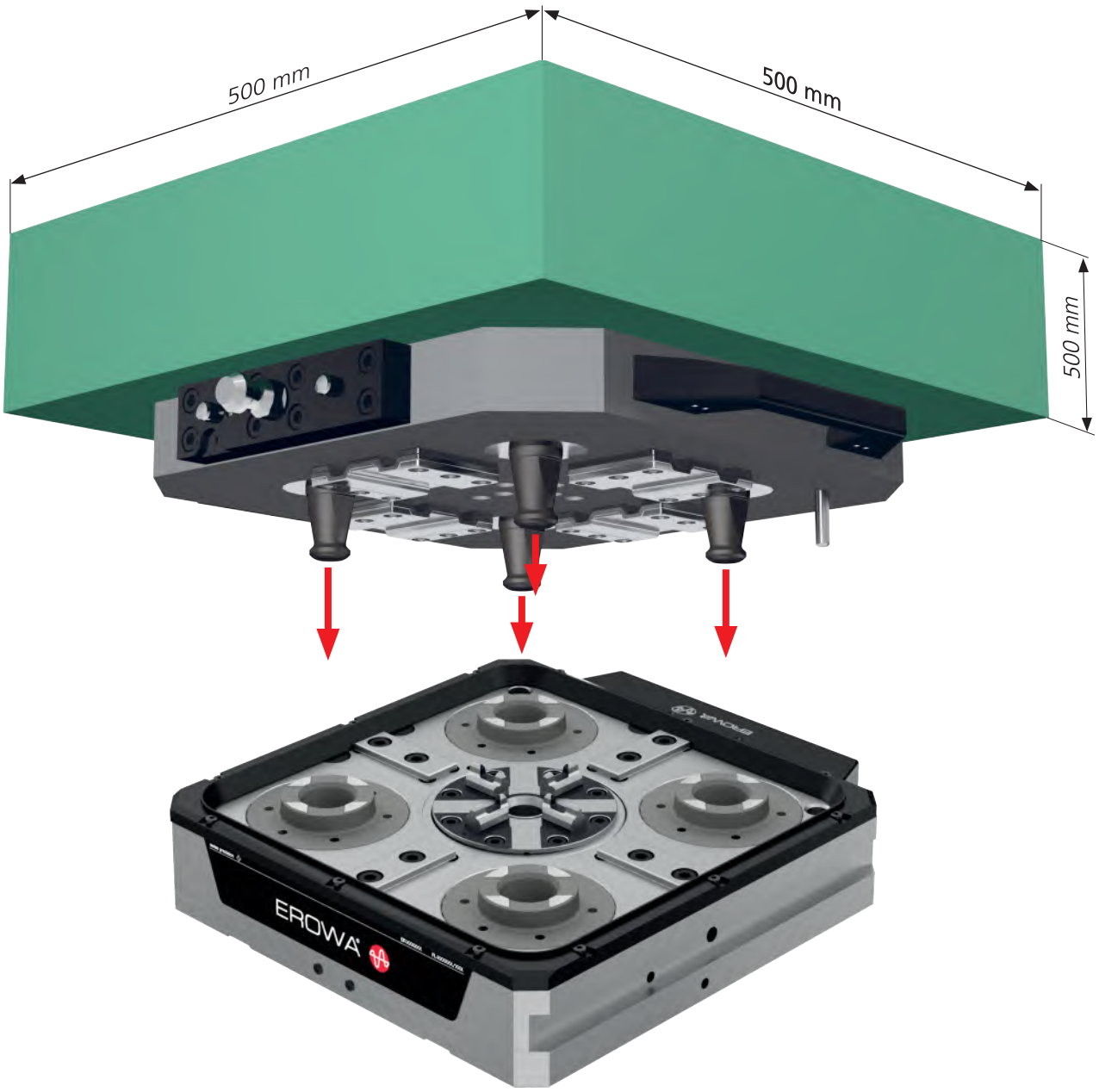

Applications

Handling

Manual / Loading facility / Robot

Function

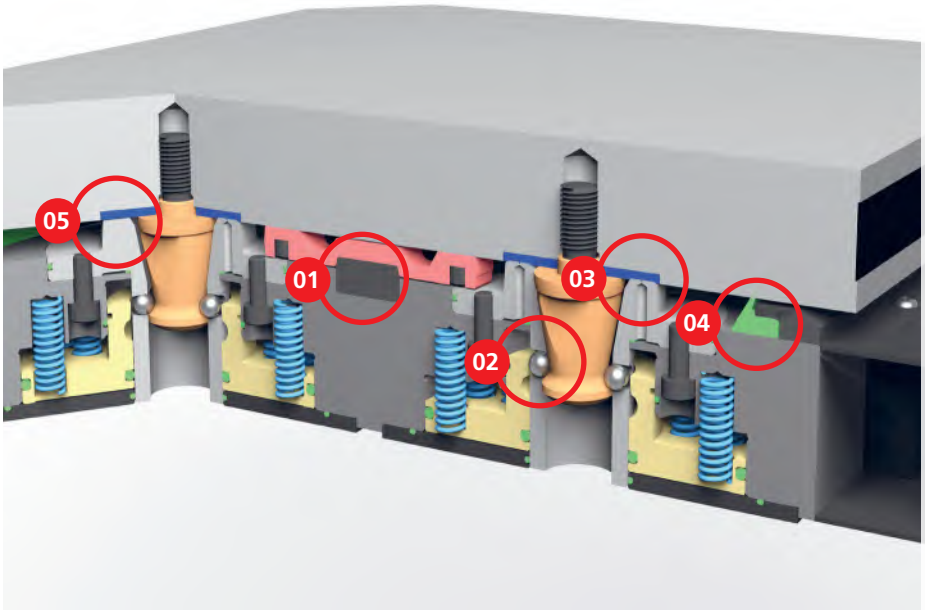

01 | Centering
The four centering segments in the pallet and in the chuck guarantee a precise position orientation. The clamping spigots are used for pre-centering.

02 | Power package
The self-locking ball lock generates a clamping force of up to 80,000 N. The full clamping force is maintained even in the event of a pressure drop.

03 | Cleaning
During the clamping process, the contact surfaces are cleaned with compressed air.

04 | 100% tight
The sealing prevents the penetration of chips and coolant.

05 | Tilting stable
Thanks to the widely spaced contact surfaces, the UPC clamping system is extremely stable against tilting.

Technical data - UPC 2.0

Pallet size	320 x 320 mm
Chuck dimensions	280 x 280 mm and 320 x 300 mm
System height (chuck and pallet)	105 mm
Recommended workpiece sizes	up to 500 x 500 x 500 mm
Repeatability	< 0.002 mm
Indexing of pallet	4 x 90°
Clamping force	50,000 N spring power (clamped without pressure)
Clamping force with reclamping	80,000 N
Opening pressure	min. 6 bar (pneumatic)
Reclamping pressure	3 bar (pneumatic)
Operation	manual or automatic control unit
Monitoring	pneumatic, electropneumatic evaluation

EROWA UPC in operation

Universal, powerful, micron-accurate

The UPC clamping system is suitable for flexible use.
Whether large electrodes on the quill of EDM machines or large workpieces in milling machines – UPC holds what needs to be held and withstand.

FACTS

- High clamping force
- Repeatability < 0.002 mm
- Air-cleaned Z support surfaces
- Robust
- Reliably sealed
- Wide range of options
- Can be automated



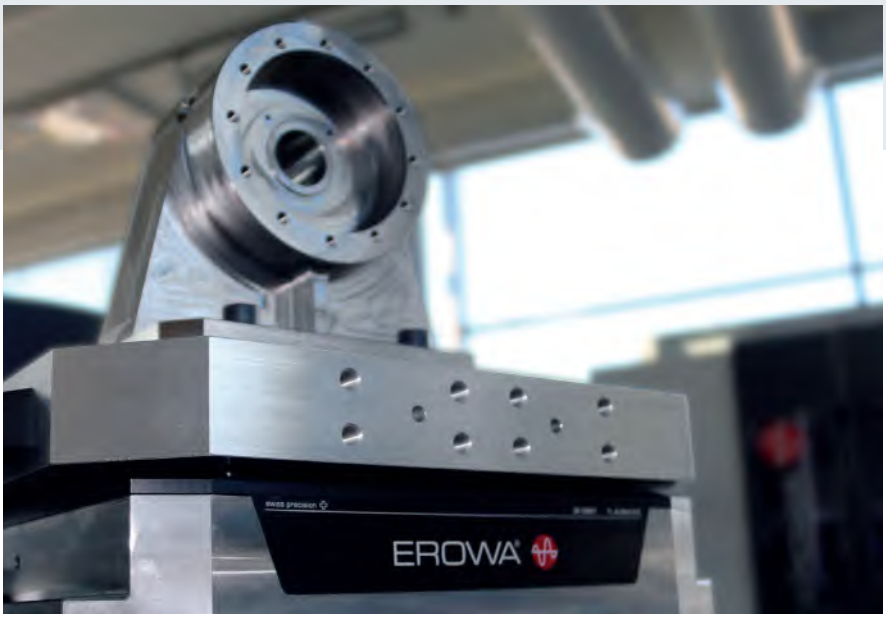

With 50 kN clamping force and optional reclamping function (80 kN) for all chuck types, the UPC holds everything that needs to be held.

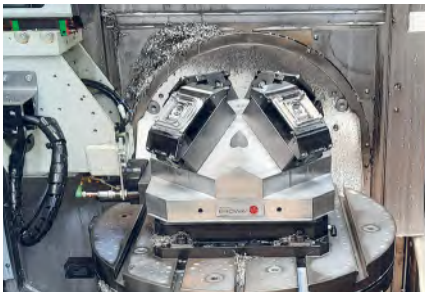

Basis for all types of workpiece carriers: Vices, gauges and fixtures are mounted on the UPC pallet. This way they are integrated throughout the EROWA UPC palletizing system.



The clamping system is completely sealed and therefore reliably protected against the penetration of coolant and chips. The contact surfaces are automatically and accurately cleaned with air.



Unmatched repeatability of < 0.002 mm for workpiece sizes up to 500 x 500 x 500 mm.



The UPC 2.0 chuck with the integrated ITS chuck ensures the seamless integration of the EROWA ITS 50 or ITS 100 workpiece carriers into the UPC system. This combination allows flexible use depending on the part size.



Practical and individually applicable: Grinding on the UPC magnetic pallet.



The UPC palletizing system is consistently automatable. We will be happy to advise you on an automation solution that meets your needs.

EROWA UPC

The components

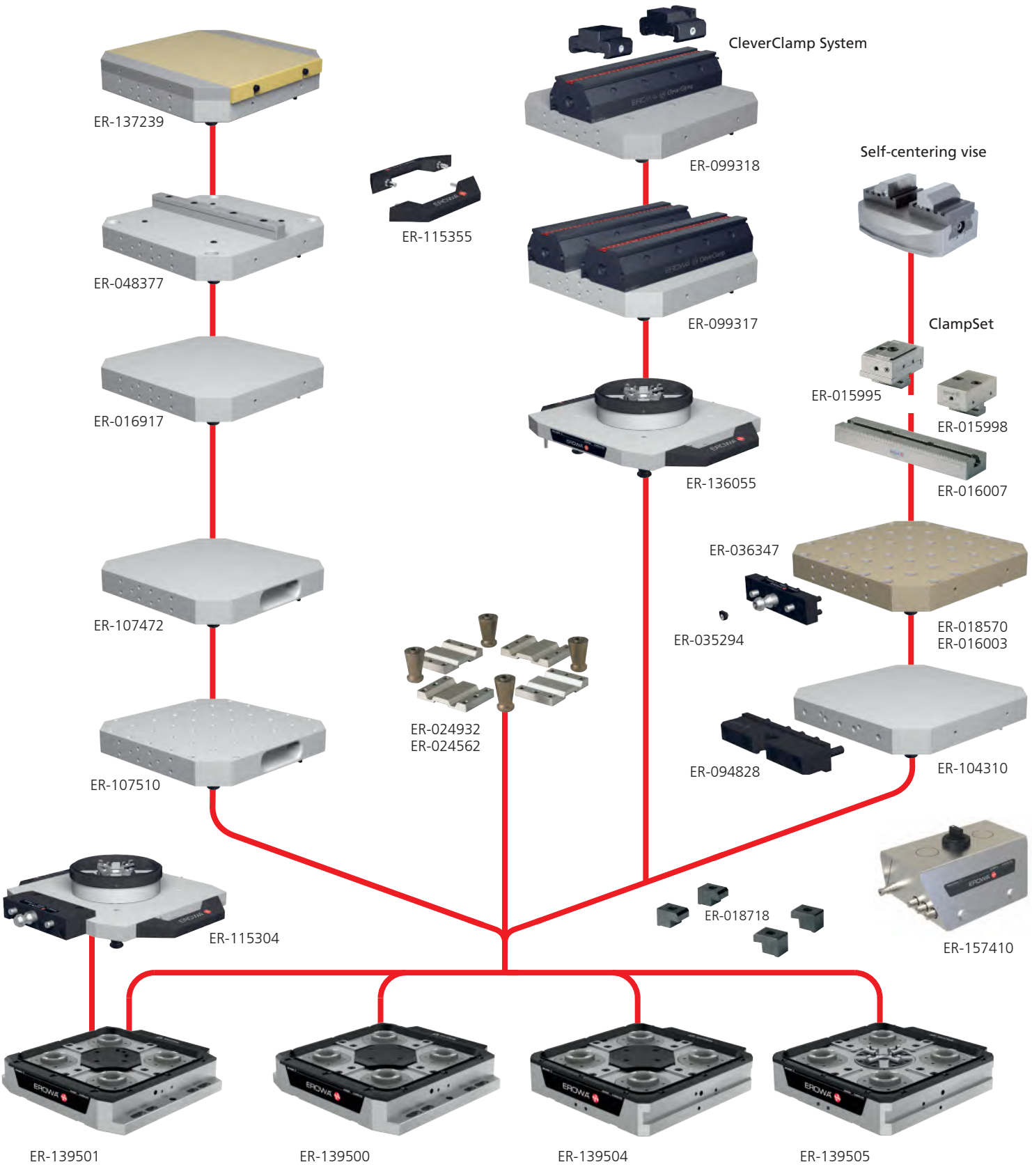

To make it easier for you to find your way about the fields of application for EROWA products, we use the following symbols in all our documents:

1. Manual operation
2. Operate with compressed air jet
3. Operate with manual valve
4. Operate with manual control unit
5. Operate with electro-pneumatic control unit
6. With central flushing clearance
7. Suited for submerged operation
8. Corrosion-resistant material
9. Suited for automatic operation
10. Handling with EROWA Robot gripper S
11. Handling with EROWA Robot gripper Combi
12. Handling with EROWA Robot gripper C
13. Handling with EROWA Robot gripper 72
14. Handling with EROWA Robot gripper 115
15. Handling with EROWA Robot gripper 148
16. Handling with EROWA Robot gripper RN PC 210
17. Handling with EROWA Robot gripper RCS
18. Handling with EROWA Robot gripper WGS-500

EROWA UPC

UPC	Chucks	86
UPC	Pallets	88
UPC	Operation	92
UPC	Auxiliary equipment	93

For chip-removing processes

For EDM sinking

For WEDM

EROWA UPC

Chucks

Technical specifications	UPC 2.0	ITS Chuck 100 P	PowerChuck P
Repeatability	< 0.002 mm	< 0.002 mm	< 0.002 mm
Indexing of pallet	4 x 90°	4 x 90°	4 x 90°
Clamping force	50,000 N spring power	6,000 N spring power	10,000 N spring power
Clamping force with reclamping	80,000 N		
Opening pressure	min. 6 bar (pneumatic)	min. 6 bar (pneumatic)	min. 6 bar (pneumatic)
Reclamping pressure	3 bar (pneumatic)		

ER-139500 UPC 2.0 chuck 320 x 300

Version	UPC 2.0 chuck, size 320 x 300 mm. Including borehole pattern adapter (fitted) and pitch ø 57mm adapter (not fitted).
Connections	4 connections (pneumatic), laterally and on the underside through adapter: for opening, cleaning / presence check, reclamping, cleaning the UPC centerings.
Option	Customer-specific adapter on request.
Application	On milling, grinding, drilling, EDM and measuring machines. To accommodate UPC pallets.
To fit	Fitting bore pattern 50mm/M12, star table and machine table with T-slot distances of 63, 80 and 100 mm.

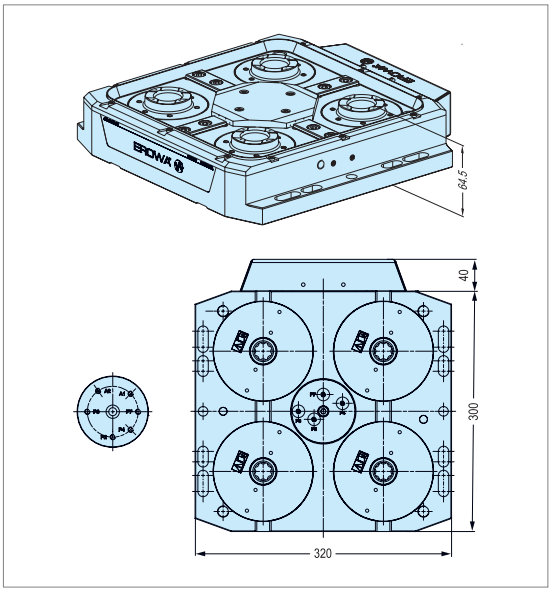

ER-139501 UPC 2.0 chuck 320 x 300 with air dock

Version	UPC 2.0 chuck with two AirDock connections, size 320 x 300 mm. Inlcuding pitch ø 57 mm adapter (fitted).
Connections	6 connections (pneumatic), laterally and on the underside through adaper: for opening, cleaning /presence check, reclamping, cleaning the UPC centerings, as well as opening, cleaning / presence check of the adaption chuck (air duct).
Option	Customer-specific adapter on request.
Application	On milling, grinding, drilling, EDM and measuring machines. To accommodate UPC and adapater pallets.
To fit	Fitting bore pattern for 50mm/M12 grid, for star tables and machine tables with T-slot distances of 63, 80 and 100 mm.

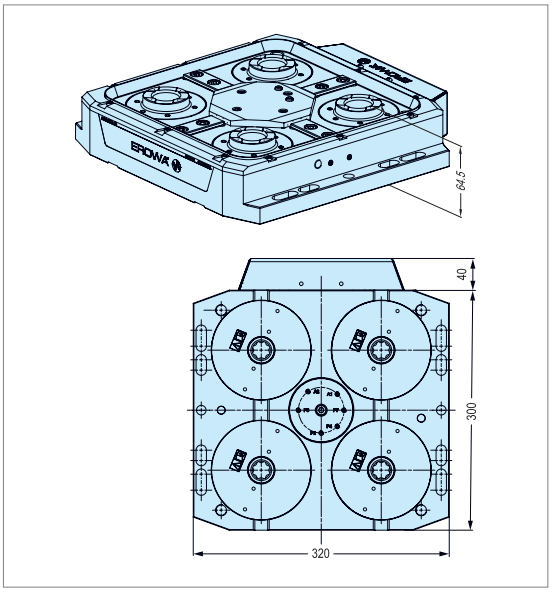

ER-139504 UPC 2.0 chuck 280 x 280

Version	UPC 2.0 chuck. size 280 x 280 mm. With fixed connection on the underside.
Connections	4 connections (pneumatic), laterally and on the underside on pitch ø 5 mm: for opening, cleaning / presence check, reclamping, cleaning of UPC centerings.
Application	On milling, grinding, drilling, EDM and measuring machines. To accommodate UPC pallets.
To fit	Fitting borehole pattner for 25mm/M12 grid, for star tables and machine tables with a T-slot distance of 50 mm.

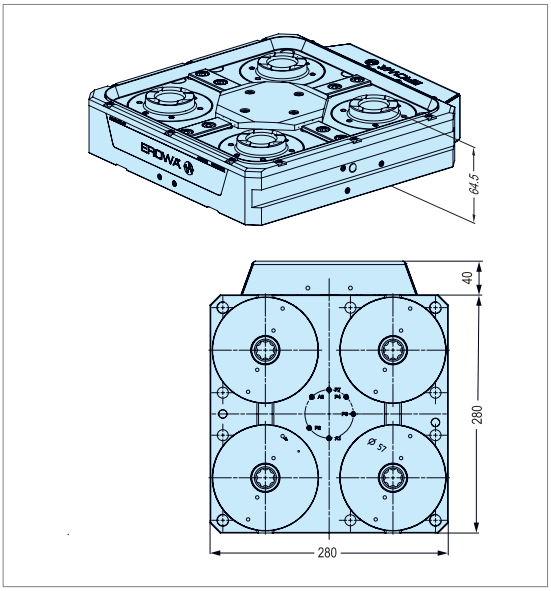

ER-139505 UPC 2.0 chuck 280 x 280 with ITS chuck 100 P

Version	UPC 2.0 chuck with integrated ITS chuck 100 P, size 280 x 280 mm. With fixed fitting pattern on the underside.
Connections	6 connections (pneumatic), laterally and on the underside on pitch ø57mm: for opening, cleaning /presence check, reclamping, cleaning the UPC centerings, as well as opening, cleaning / presence check of the ITS chuck 100 P.
Application	On milling, grinding, drilling, EDM and measuring machines. To accommodate UPC pallets, pallets ø115, ø 148, electrode holders, etc.
To fit	Fitting borehole pattnern for 25mm/M12 grid, for star tables and machine tables with a T-slot distance of 50 mm.

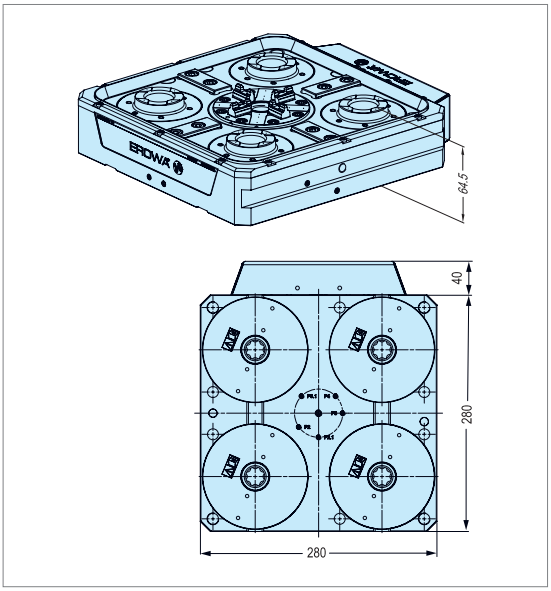

EROWA UPC

Pallets

ER-016917 **UPC pallet Alu 320 x 320 x 40 mounting surface ground**

Version	Aluminum, centering segments and chucking spigots fitted, hard Z-support.
Application	To clamp workpieces and gauges.
Please note	Drill holes according to need.

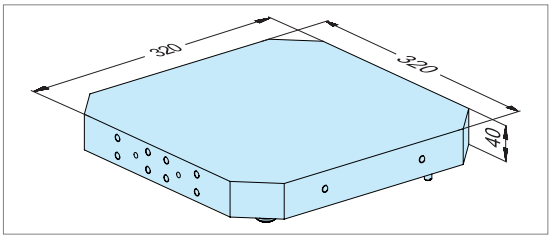

ER-107472 **UPC pallet Alu 320 x 320 x 40 mounting surface milled**

Version	Aluminum, centering segments and chucking spigots fitted, hard Z-support, integrated handles. Mounting surface milled.
Application	To mount workpieces and gauges.
Mounting workpiece	Drill holes according to need.

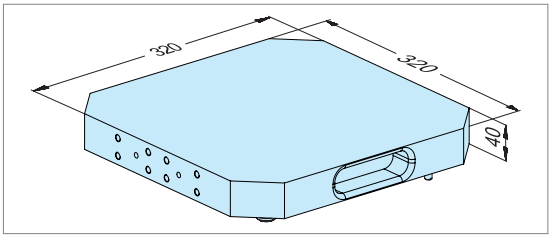

ER-104310 **UPC pallet Alu 320 x 320 x 40 WGS-500 40 mm**

Version	Aluminum, centering segments and chucking spigots fitted, hard Z-support.Prepared with bore pattern for WGS-500 40mm GripperLink.
Application	To clamp workpieces and gauges.
Please note	Drill holes according to need.

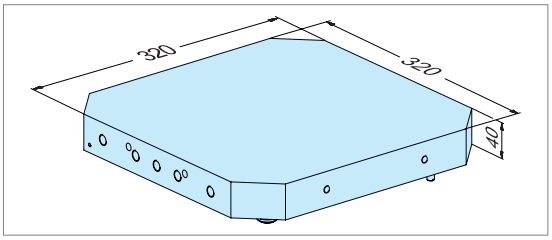

ER-018570 **UPC pallet Alu R50 320 x 320 x 40 mounting surface ground / anodized**

ER-016003 **UPC pallet Alu R50 320 x 320 x 40 mounting surface ground**

Version	Aluminum with 50 mm grid, pattern borehole ø 12F7, M12 thread. Centering segments and chucking spigots fitted. Hard Z-support.
Application	Basis for gauges and workpieces.

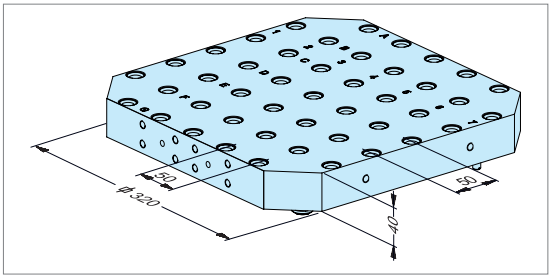

ER-107510 **UPC pallet Alu R50 320 x 320 x 40 mounting surface milled**

Version	Aluminum, centering segments and chucking spigots fitted, hard Z-support, integrated handles. Hole grid R50 for M10 nut inserts (option). Mounting surface milled.
Application	To mount workpieces and gauges.
Option	ER-032503 Insert nuts M10 (set of 12).

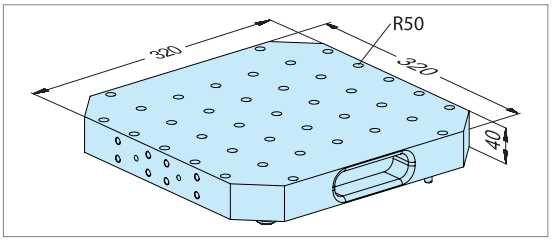

ER-137239 UPC magnet pallet Neomicro 320 x 320 x 58 mm

Version: UPC pallet with fitted magnetic plate, 320 x 320 x 58. Manual clamping and unclamping with a spanner supplied.

Application: Clamping workpieces for surface and profile grinding, EDM and high-frequency milling.

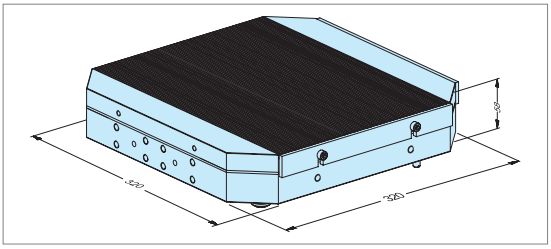

ER-099318 Base UPC mono CleverClamp

Version: Combination of UPC aluminum pallet with 320 Clever-Clamp rail; centering segments and chucking spigots fitted. Z-Support hard.

Application: Optimal accessibility for 5-axis applications with single and multiple fixtures.

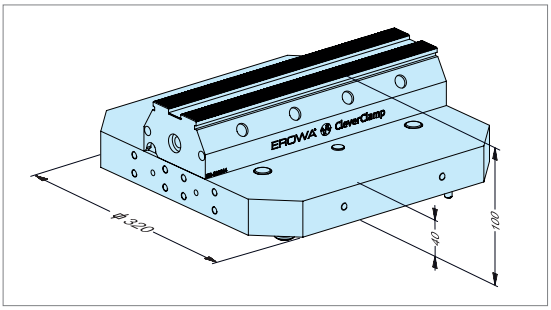

ER-099317 Base UPC duo CleverClamp

Version: Combination of UPC aluminum pallet with two Clever-Clamp 320 rails; centering segments and chucking spigots fitted. Z-support hard.

Application: Optimal for multiple fixtures and for clamping big workpieces.

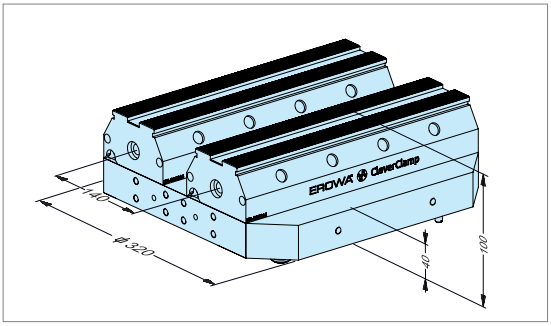

ER-048377 UPC Alignment pallet 320 x 320 x 40 mm

Version: UPC pallet with ground alignment rail and four Z-measuring surfaces.

Application: Alignment of the angle position and determination of the center and the Z-values of UPC chucks.

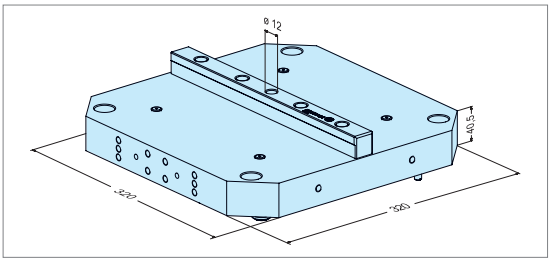

EROWA UPC

Adapter pallets PowerChuck P

ER-136055	Adapter pallet UPC PowerChuck P manual



Version	UPC adapter pallet with PowerChuck P fitted.
Connections	On the side of the pallet.
Application	For the manual change of the adapter plate on the UPC chuck.

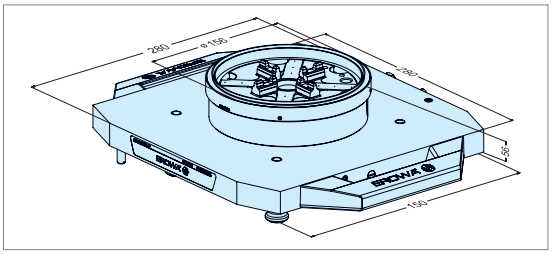

ER-115304	Adapter pallet UPC PowerChuck P automatic



Version	UPC adapter pallet with PowerChuck P fitted.
Connections	On the underside of the pallet, suitable for all UPC chucks with air couplings.
Application	For the automatic change of the adapter plate to the UPC chuck with a handling facility.

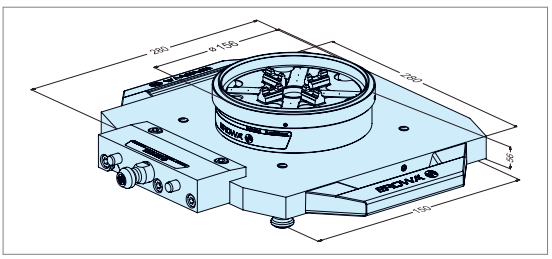

EROWA UPC

Adapter pallets VPC

ER-166736 UPC adapter range VPC 52 automatic with reversing valve

Version	UPC adapter pallet with VPC 52 fitted. With reversing valve.
Connections	On the underside of the pallet, suitable for all UPC chucks with air couplings.
Application	For the automatic change of the adapter plate to the UPC chuck with a handling facility.

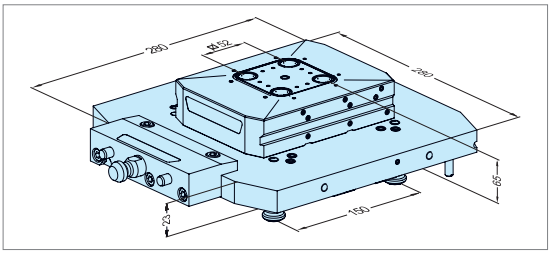

ER-173410 UPC adapter range VPC 96 automatic with reversing valve

Version	UPC adapter pallet with VPC 96 fitted. With reversing valve.
Connections	On the underside of the pallet, suitable for all UPC chucks with air couplings.
Application	For the automatic change of the adapter plate to the UPC chuck with a handling facility.

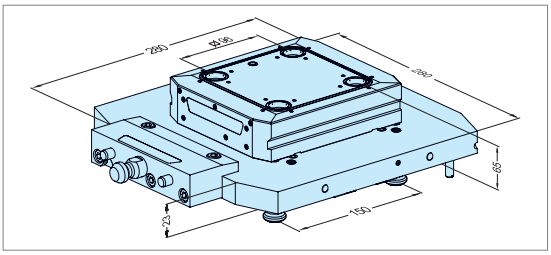

EROWA UPC

Operation

ER-157410 Control box 1-fold

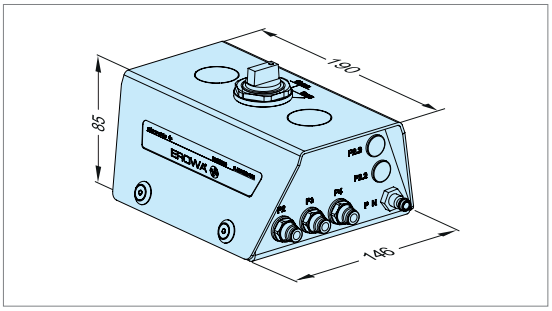

Version	Manual control box for 1 chuck. To control the opening / reclamping / cleaning functions. Pressure adjustable. Includes a set of tubes.
Connections	1 input (P IN) and 3 outputs (P2 Open / P3 Clean / P4 Reclamp).
Application	To operate chuck types ITS, ITS Compact, CombiChuck, PowerChuck P, VPC, UPC or PM Tooling.

ER-158218 UPC 2.0 air jet connection

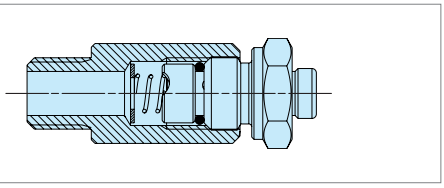

Version	Air gun valve for the manual operation of UPC 2.0 chucks with an air gun.
Application	To be fitted to UPC 2.0 chuck.

EROWA UPC

Auxiliary equipment

ER-024932 UPC centering segments and chucking spigots, for mounting from above

Version	Four segments and chucking spigots for UPC, including bolts.
Application	To produce special UPC pallets.
Mounting	With bolts through the pallet from above.
Note	Easy to assemble on the UPC chuck.

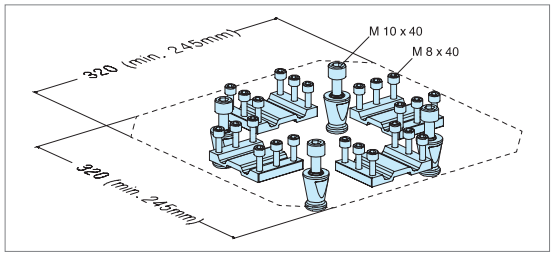

ER-024562 UPC centering segments and spigots to mount from lower side

Version	Four segments and chucking spigots for UPC, including bolts.
Application	To produce special UPC pallets.
Mounting	With bolts through the pallet from below.
Note	Easy to assemble on the PreSet Basic UPC presetting station.

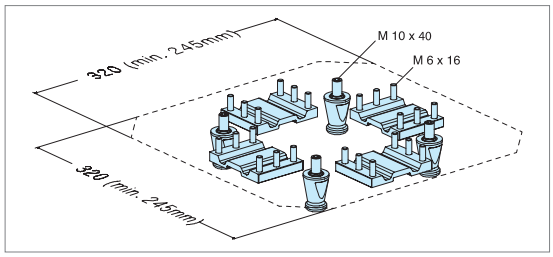

ER-012444 Cover for UPC

Version	Aluminum.
Application	Cover for UPC.

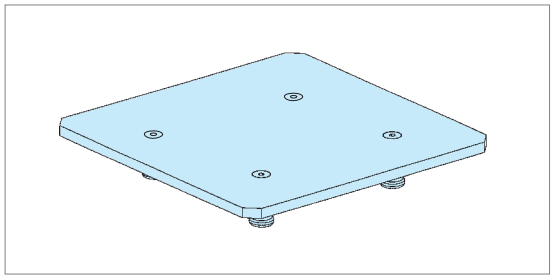

ER-094178 Cover set for UPC / ITS

Version	Aluminum with inserts, to protect UPC chucks when used wih holder ø72, pallet ø115, pallet ø148, electrode holders ITS 50 C.

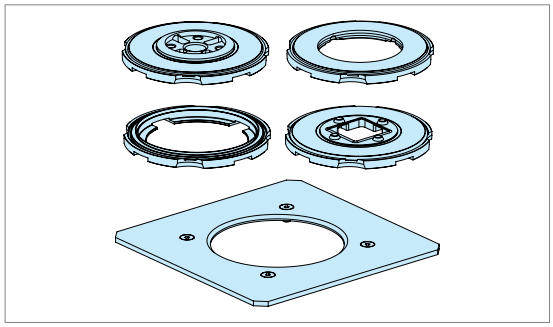

ER-018718 UPC clamping bracket 4 pieces

Version	High tension steel, mounting accessories not included.
Application	To mount UPC chucks to machine tables.
Please note	Fits UPC chuck No. ER-139504/ER-139505

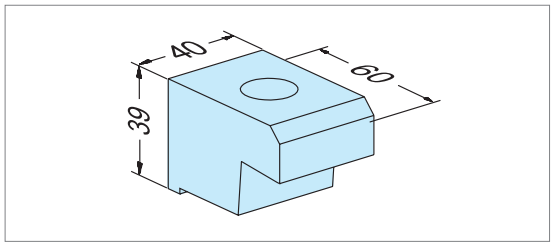

EROWA UPC

Auxiliary equipment

ER-115355 Handle 2 pieces

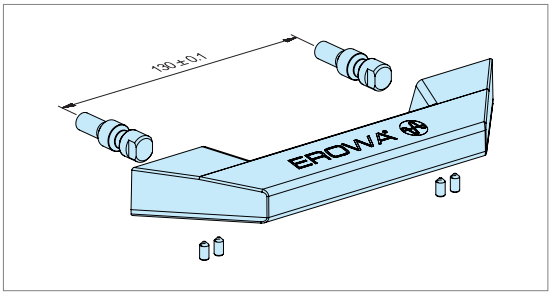

Version	Aluminum handle.
Application	Handle for UPC pallets.
To fit	Fit into the prepared threads with enclosed attachment bolts according to instructions.

ER-036347 GripperLink RCS 38 mm

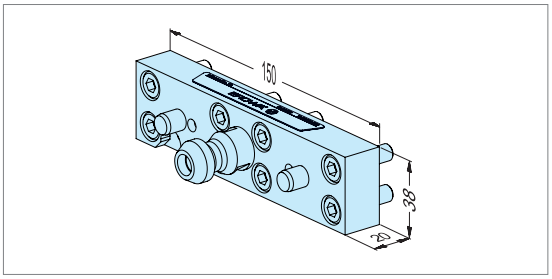

Version	Coupling for UPC pallets, mounting accessories included.
Application	Suited for UPC pallets to be used on EROWA handling devices with the «RCS» coupling System.

ER-094828 GripperLink WGS-500 40 mm without air connection

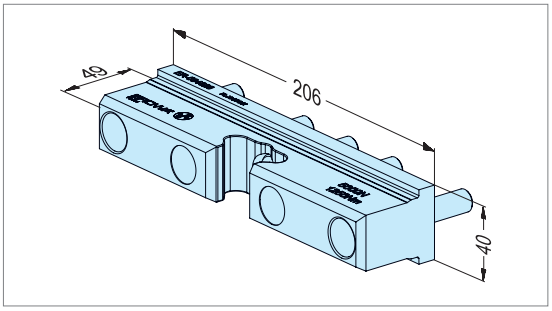

Version	Coupling kit incl. screw set, for mounting on MTS or UPC pallets.
Application	For pallets on EROWA handling units that are equipped with the WGS-500 exchange gripper system.

ER-035294 EWIS™ Rapid chip with chip holder RCS with chip ø 3 x 13.5mm

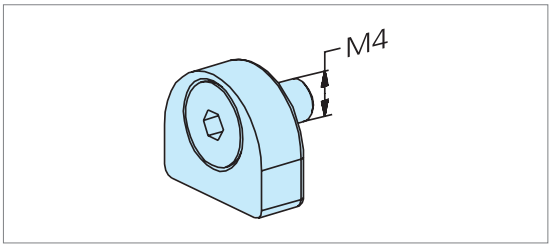

Version	Holder with built-in data carrier. EWIS chip: read only.
Application	To build into RCS coupling, PalletSet W holder and Basic WEDM holder.

ER-023121 Repair kit for UPC O-rings, springs, balls for ITS 070649

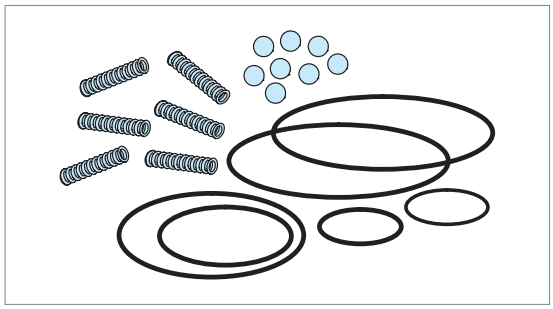

Version	All the wearing parts of UPC ER-016092, ER-016093, ER-070649 and ER-074524.
Application	Dismantle UPC according to instructions supplied, replace parts.
Note	Each UPC is supplied with an operating manual, which you will please keep.

ER-023120 Repair kit for UPC P O-rings, springs, balls

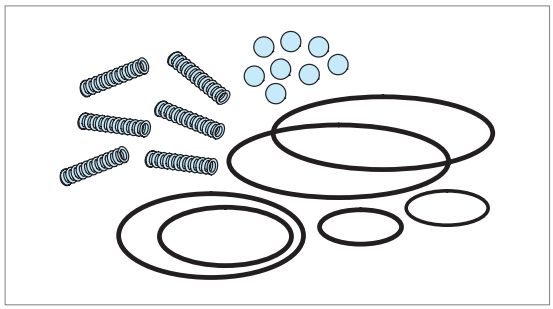

Version	All the wear parts of UPC P ER-016841, ER-078728 and ER-028784.
Application	Dismantle UPC P according to instructions supplied, replace parts.
Note	Each UPC P is supplied with an operating manual, which you will please keep.

ER-139039 Repair kit for UPC 2.0

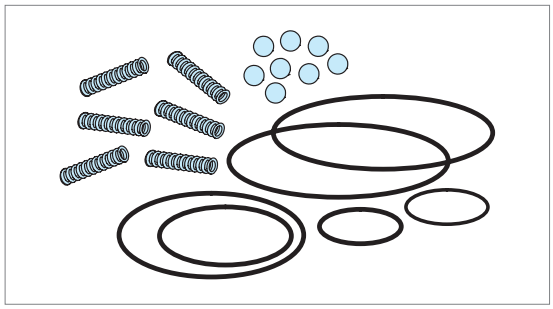

Version	All the wearing parts (O-rings, springs, balls) for UPC 2.0 chucks ER-139500, ER-139501 and ER-139504.
Application	Dismantle UPC 2.0 chuck according to instructions, replace wearing parts and reassemble.

ER-139049 Repair kit for UPC 2.0 + ITS Chuck

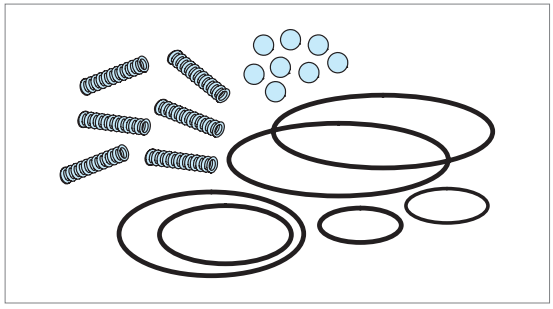

Version	All the wearing parts (O-rings, springs, balls) for UPC 2.0 chuck 280 x 280 with ITS Chuck 100 P, ER-139505.
Application	Dismantle UPC 2.0 and ITS chucks according to operating instructions, replace wearing parts and reassemble.

EROWA CleverClamp System

The flexible workpiece clamping system for chip-cutting processes

The EROWA CleverClamp system is a modular and universal workpiece clamping system. It is simple to operate and can be used in a wide variety of ways.

CleverClamp base rails are fitted directly to the machine table, a tombstone, a pallet, etc. Thanks to the standardized interface, they can be universally used in EROWA's ITS, UPC and MTS palletizing systems.

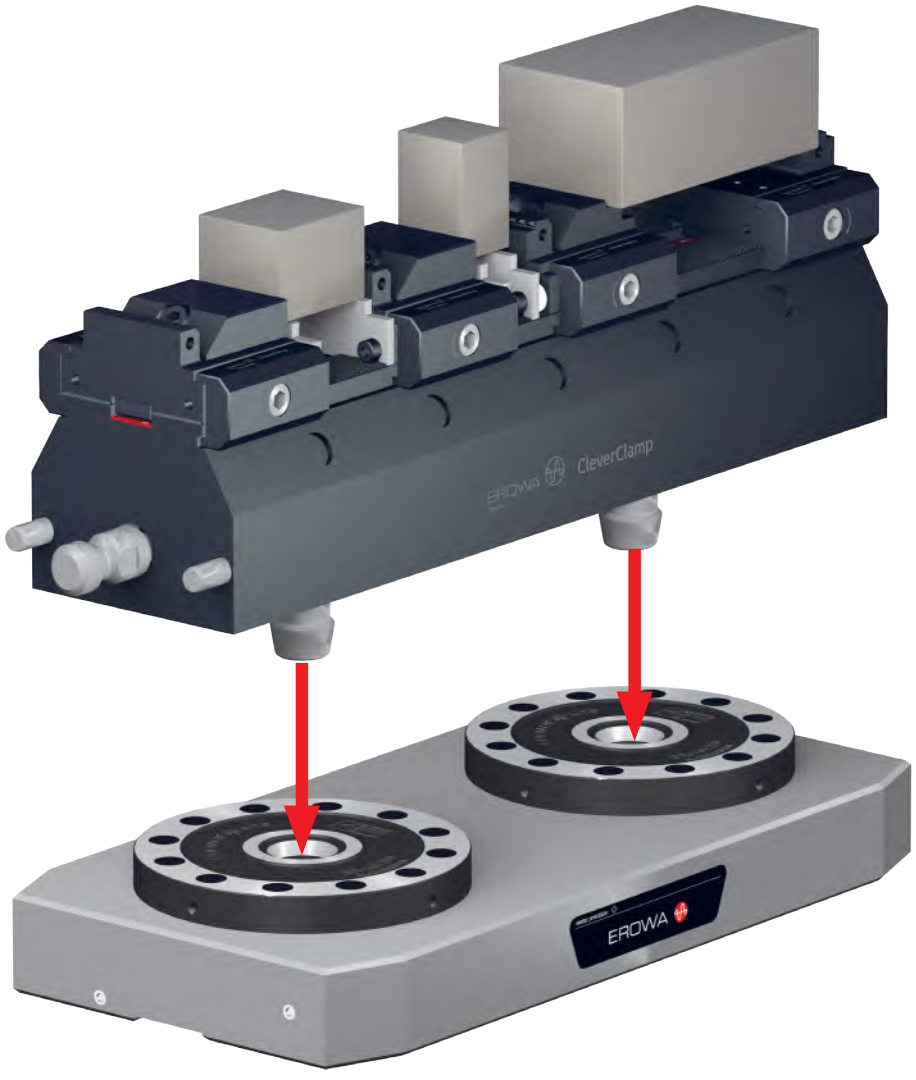

Applications

Handling

Manual / Loading facility / Robot

Function

Rail 398 H80

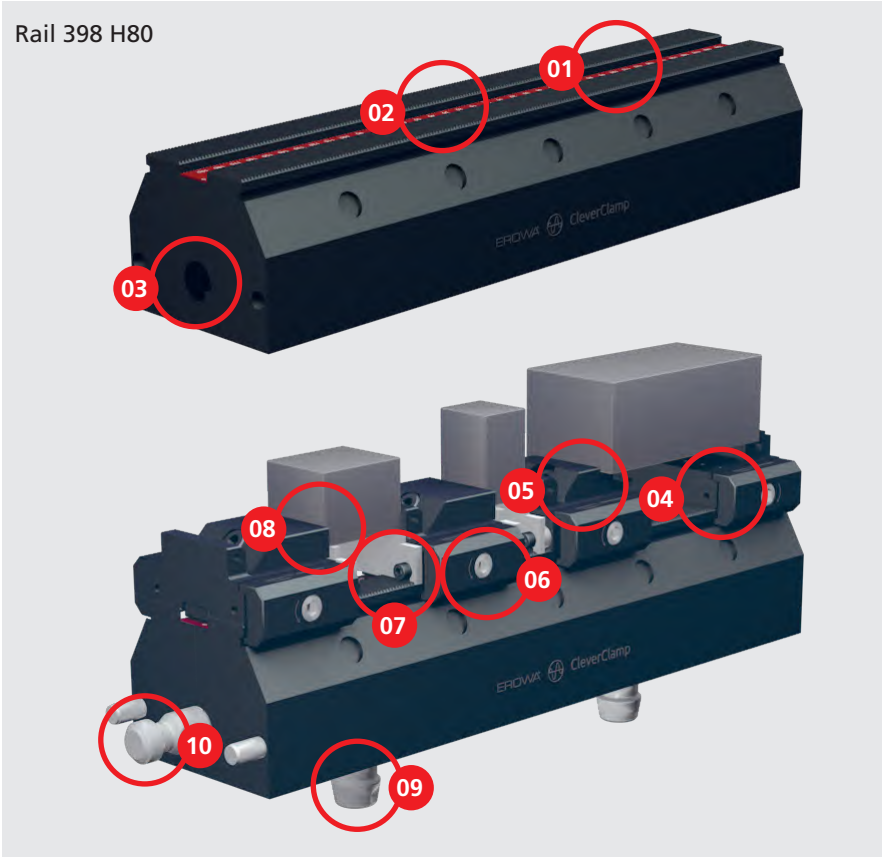

01 | Precise
Steel, hardened and ground, 2mm positioning grid.

02 | Scale
for the quick positioning of the clamping elements.

03 | Automation
Attachment borehole for the coupling required for automatic handling.

04 | Stop element

05 | Clamping element
Depending on requirements, as a pull-down or linear clamping element.

06 | Locking bolt
Threaded spindle mechanism for the quick attachment of the modules.

07 | Support
Various versions and heights.

08 | Clamping jaw
A suitable stop surface for every clamping position.

09 | Chucking spigot
For direct clamping in the EROWA MTS tooling system.

10 | Automation coupling (option)
More productive machine hours through automatic loading.

Technical data - Clamping elements

	Pull-down clamping elements	Linear clamping elements
Clamping range	0 - 4.1mm	0 - 5mm
Clamping power	up to 28kN	up to 16kN

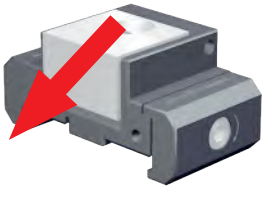

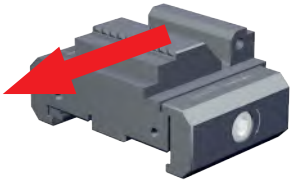

EROWA CleverClamp system in operation

Perfect combination

The CleverClamp system clamps any workpiece and adapts to any machine situation. Suitable clamping and stop elements can be placed quickly with the help of the precise positioning grid. The base rails take up hardly any room but still provide a great deal of space for the flexible attachment of a wide variety of workpiece shapes and sizes.

FACTS

- Single and multiple clamping
- High clamping power
- Clamping surfaces in different finishes.
- Modular extensions available
- Precise 2 mm positioning grid
- Wide range of models
- Clamping rails can be automated directly



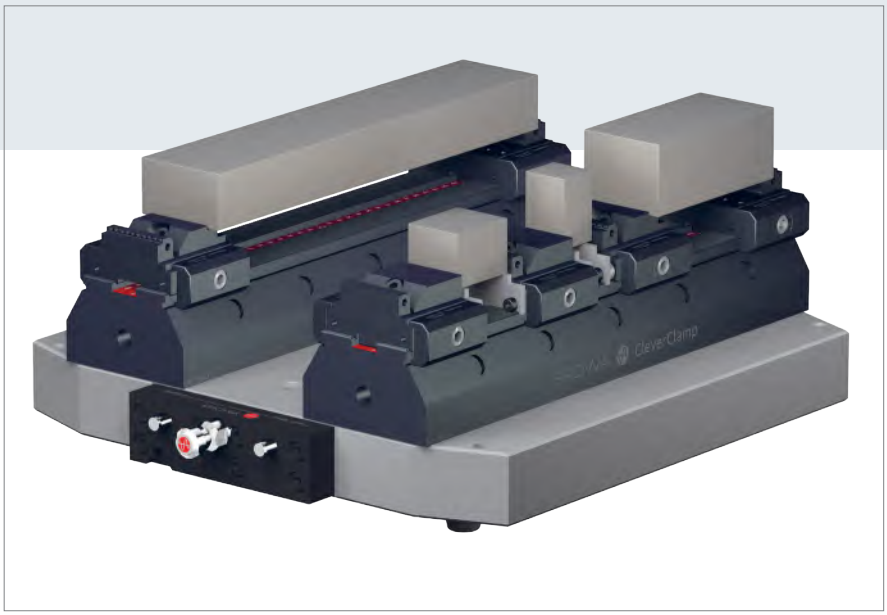

Easily clamp different workpieces with different clamping elements on one pallet and increase the machine's cycle time through multiple clamping and automation.



A wide selection of clamping elements and jaws holds any workpiece.



CleverClamp mounted on EROWA mineral cast cube. Clamp many workpieces and make optimized use of the full working area of the machine.



Set-up and changeover in a few steps. Position and fasten the stop and clamping elements according to the size of the workpiece. Then clamp the workpiece.

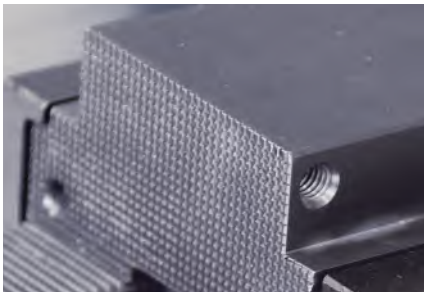

Clamping surface with grip contour - CleverClamp clamping jaws are available in various designs and, depending on your requirements, with different characteristics of the clamping surfaces.



Ingenious stamping contour - The workpieces are held at 3 mm minimal clamping height with up to 1.6 tons of holding power form and friction locked.



The CleverClamp rail can be directly automated and used throughout the EROWA MTS tooling system.

EROWA CleverClamp System

The components

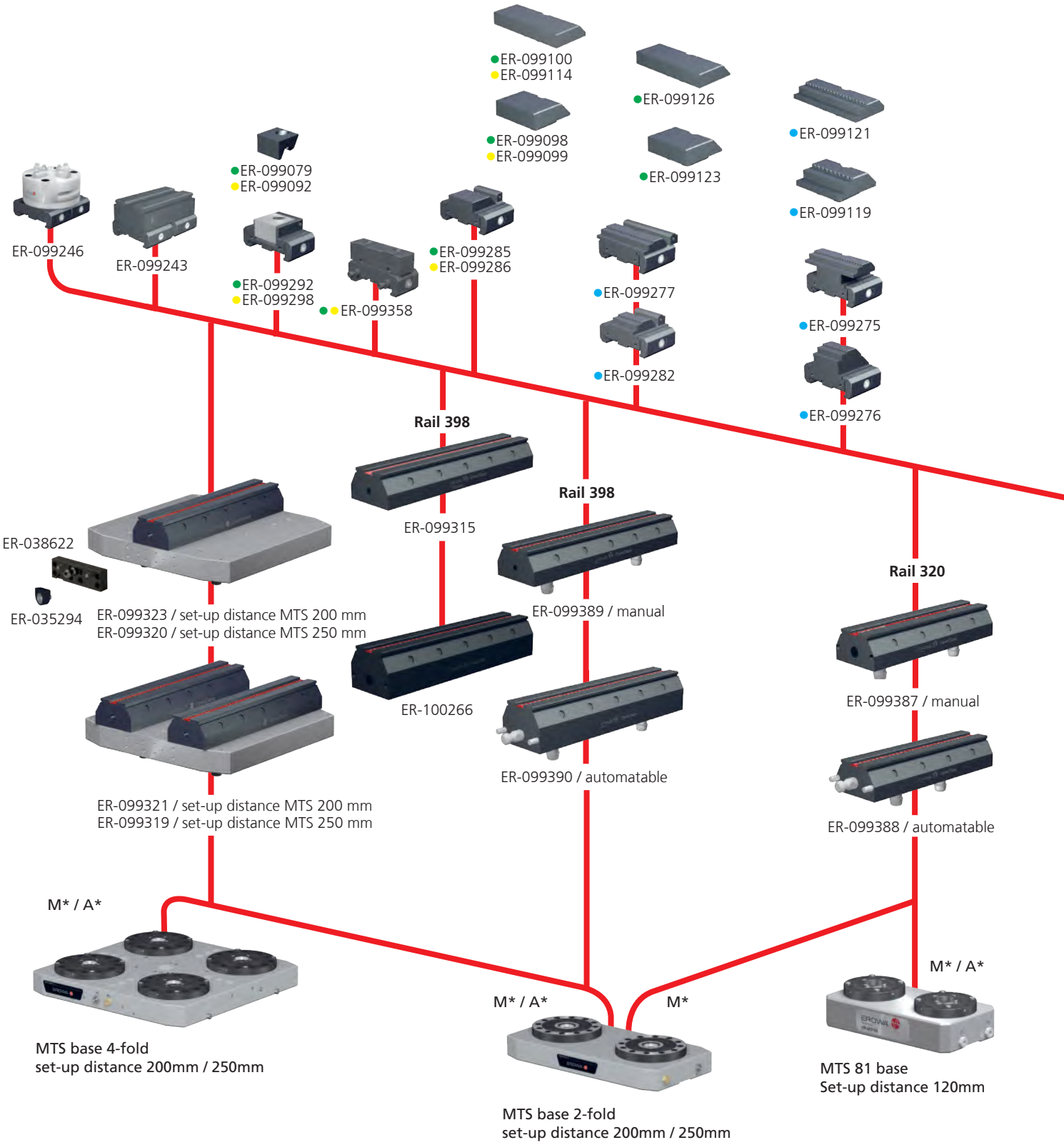

EROWA provides you with a full range of products - everything fits together!


smooth

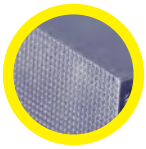
Grip contour


Stamping contour

The color icon describes the respective surface finish.

Various accessories


●● ER-099166


● ER-099195


● ER-099164


Parallel supports


Parallel supports - wide


●● ER-099272


●● ER-099332


● ER-099267


● ER-099269


● ER-099258


● ER-099263

Rail 320


ER-099314

Rail 218


ER-099331


ER-099318 / UPC


ER-036347

ER-035294


ER-099317 / UPC

M* / A*


UPC


ER-099330


PowerChuck P


MTS Chuck S-P/A

M* = manual operation
A* = automatic operation

CleverClamp System

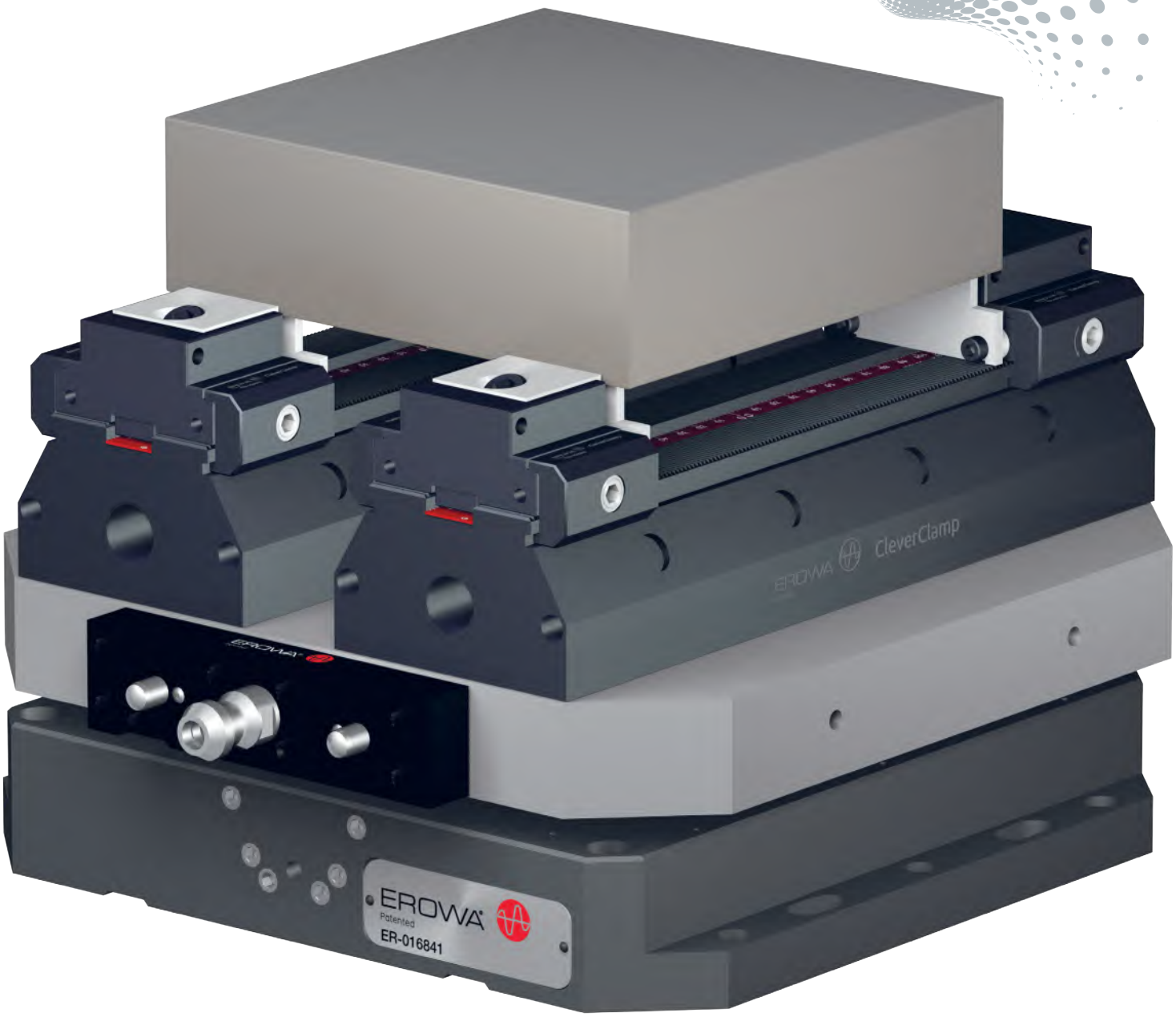
EROWA CleverClamp
EROWA
Patented
ER-016841

To make it easier for you to find your way about the fields of application for EROWA products, we use the following symbols in all our documents:


1. Manual operation


2. Operate with compressed air jet


3. Operate with manual valve


4. Operate with manual control unit



5. Operate with electro-pneumatic control unit


6. With central flushing clearance


7. Suited for submerged operation



8. Corrosion-resistant material



9. Suited for automatic operation


10. Handling with EROWA Robot gripper S


11. Handling with EROWA Robot gripper Combi


12. Handling with EROWA Robot gripper C



13. Handling with EROWA Robot gripper 72



14. Handling with EROWA Robot gripper 115



15. Handling with EROWA Robot gripper 148



16. Handling with EROWA Robot gripper RN PC 210


17. Handling with EROWA Robot gripper RCS


18. Handling with EROWA Robot gripper WGS-500



EROWA CLEVERCLAMP SYSTEM

CleverClamp System Rails 104
CleverClamp System Base rails MTS 107
CleverClamp System Base rails UPC 108
CleverClamp System Base rails ITS 108
CleverClamp System Pull down clamping elements 109
CleverClamp System Linear clamping elements 110
CleverClamp System Stop elements 112
CleverClamp System Parallel supports 114
CleverClamp System Accessories 115


For chip-removing processes


For EDM sinking


For WEDM

EROWA CleverClamp System

Rails

ER-099331 Rail 218 H35 CleverClamp

Version	Steel, hardened. Clamping element carrier, length 218mm, height 35mm, with 2mm positioning grid.
Application	Serves as a Basis to clamp workpieces with various Clever-Clamp clamping and stop elements.
To fit	To fit on grid plates R50, pallets, tombstones and machine tables. 4x M10 x35 socket head bolts.
Accessories	Clamping and stop elements, etc.
Note	Can be fitted directly to pallet P ø 148 Inox (ER-041912).

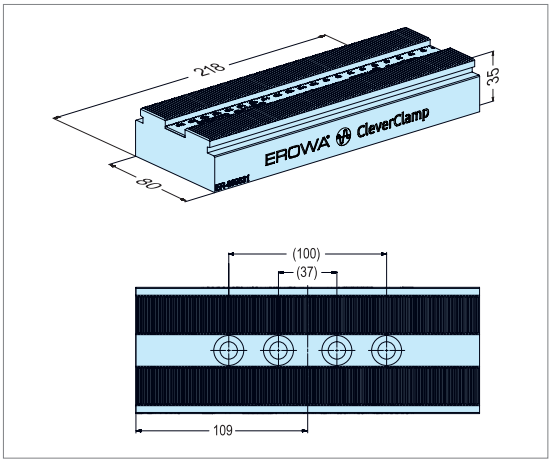

ER-099314 Rail 320 H60 CleverClamp

Version	Steel, hardened. H60 clamping element carrier with 2mm positioning grid.
Application	Serves as a base to clamp workpieces with various Clever-Clamp clamping and stop elements.
Mounting	To mount on R50 grid plates, pallets, tombstones and machine tables
Accessories	Clamping and stop elements, etc.
Important	Can be used directly with a spigot on MTS, 200mm set-up distance (M) or MTS81, 120mm set-up distance (A/M).

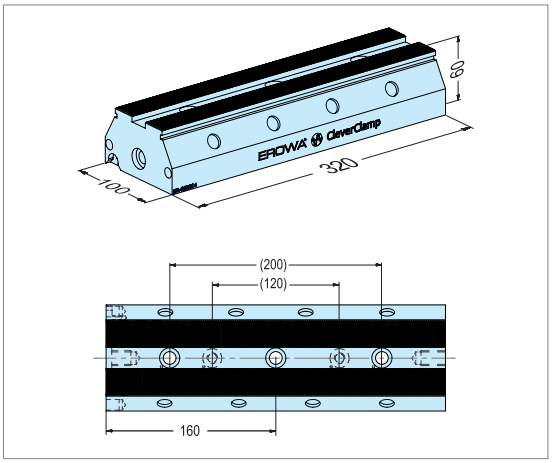

ER-099315 Rail 398 H60 CleverClamp

Version	Steel, hardened. H60 clamping element carrier with 2mm positioning grid.
Application	Serves as a base to clamp workpieces with various Clever-Clamp clamping and stop elements.
Mounting	To fit on R50 grid plates, pallets, tombstones and machine tables.
Accessories	Clamping and stop elements, etc.
Important	Can be used directly with a spigot on MTS, 200mm set-up distance (M) or 250mm set-up distance (M).

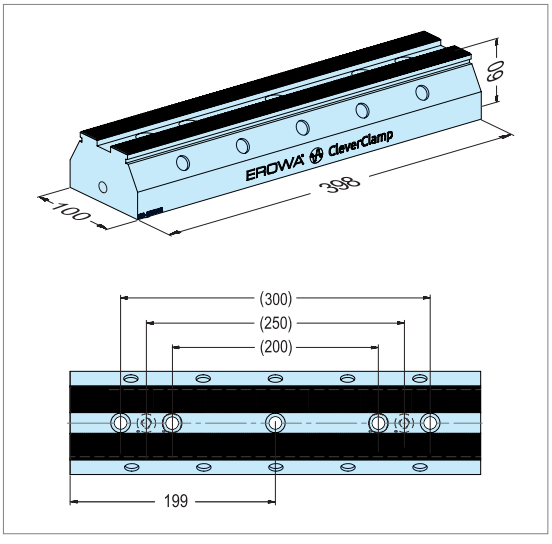

ER-100266	Rail 398 H80 CleverClamp

Version	Steel, hardened. H80 clamping element carrier with 2mm positioning grid.
Application	Serves as a base to clamp workpieces with various Clever-Clamp clamping and stop elements.
Mounting	To fit on R50 grid plates, pallets, tombstones and machine tables.
Accessories	Clamping and stop elements, etc.
Important	Can be used directly with a spigot on MTS, 200mm set-up distance (A/M) or 250mm set-up distance (A/M).

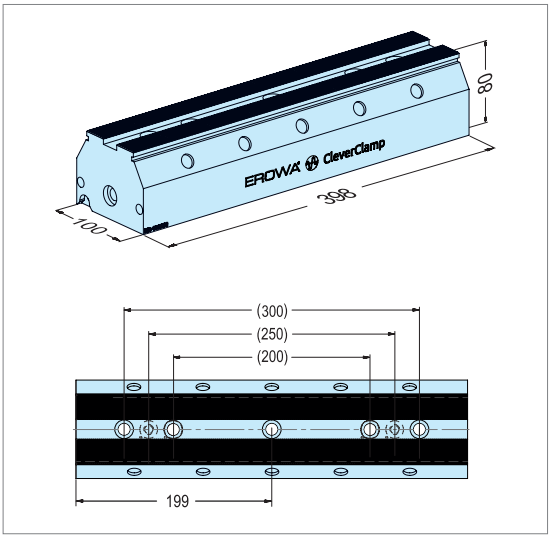

ER-099387	Rail 320 H60 manual CleverClamp

Version	Steel, hardened. H60 clamping element carrier with 2mm positioning grid. With MTS spigot, manual.
Operation	Manual application on MTS81 base plates with 120mm set-up distance and MTS base plates with 200m set-up distance.
Application	Serves as a base to clamp workpieces with various Clever-Clamp clamping and stop elements.
Accessories	Clamping and stop elements, etc.
Important	Manual application.

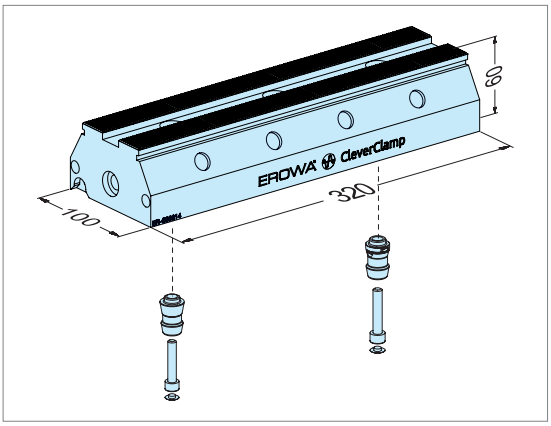

ER-099388	Rail 320 H60 automated CleverClamp

Version	Steel, hardened. H60 clamping element carrier with 2mm positioning grid. With MTS spigot, automatic, and Grip-perLink.
Operation	Automated application on MTS81 base plates with 120mm set-up distance.
Application	Serves as a base to clamp workpieces with various Clever-Clamp clamping and stop elements.
Accessories	Clamping and stop elements, etc.
Important	Automated application.

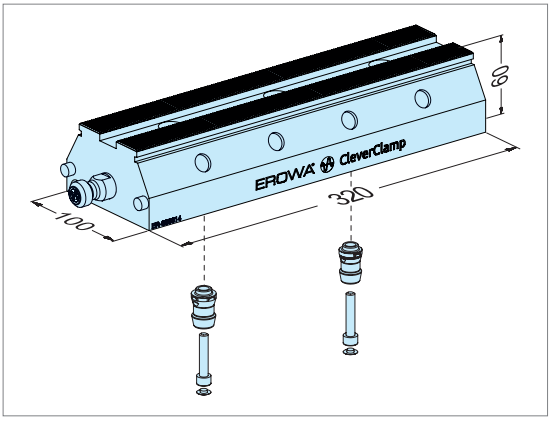

EROWA CleverClamp System

Rails

ER-099389	Rail 398 H60 manual CleverClamp

Version	Steel, hardened. H60 clamping element carrier with 2mm positioning grid. With MTS spigot, Manual.
Operation	Manual application on MTS base plates with 200/250mm set-up distance.
Application	Serves as a basis to clamp workpieces with various CleverClamp clamping and stop elements.
Accessories	Clamping and stop elements, etc.
Important	Manual application.

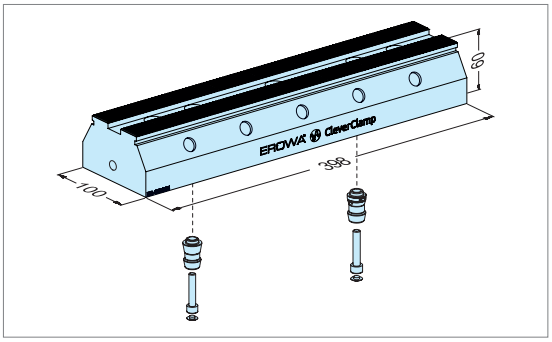

ER-099390	Rail 398 H80 automated CleverClamp

Version	Steel, hardened. H80 clamping element carrier with 2mm positioning grid. With MTS spigot, automatic, and GripperLink.
Operation	Automated application of MTS base plates with 200/250mm set-up distance.
Application	Serves as a base to clamp workpieces with various CleverClamp clamping and stop elements.
Accessories	Clamping and stop elements, etc.
Important	Automated application.

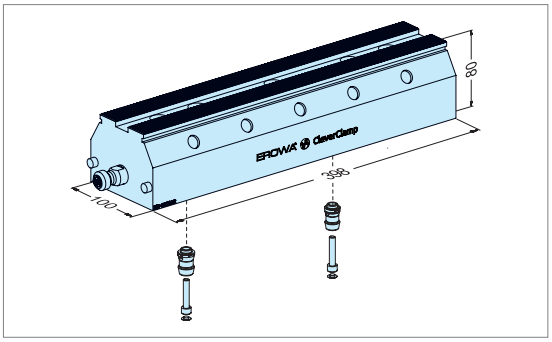

EROWA CleverClamp System

MTS Base rails

ER-130141 MTS pallet 398 x 398 / 200 CleverClamp mono

auto

Version: Aluminum pallet, 4-fold, pitch 200mm. With hard Z supports and 1 x CleverClamp rail 398. Excluding chucking spigots.

Application: Optimal accessibility for 5-axis machining with single and multiple part clamping.

Accessories: MTS chucking spigot set ER-041461 (M) or ER-041464 (A).

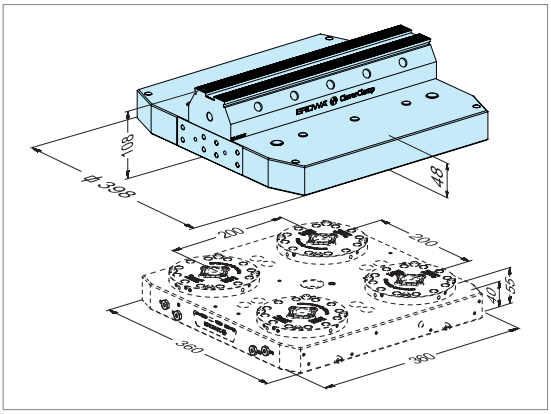

ER-130417 MTS pallet 398 x 398 / 250 CleverClamp mono

auto

Version: Aluminum pallet, 4-fold, pitch 250mm. With hard Z supports and 1 x CleverClamp rail 398. Excluding chucking spigots.

Application: Optimal accessibility for 5-axis machining with single and multiple part clamping.

Accessories: MTS chucking spigot set ER-041461 (M) or ER-041464 (A).

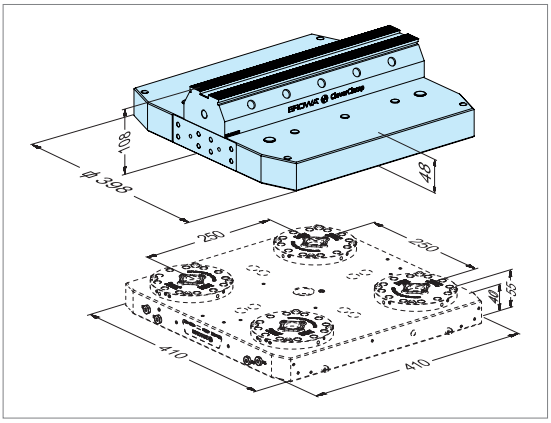

ER-130140 MTS pallet 398 x 398 / 200 CleverClamp duo

auto

Version: Aluminum pallet, 4-fold, pitch 200mm. With hard Z supports and 2 x CleverClamp rail 398. Excluding chucking spigots.

Application: Optimal accessibility for 5-axis machining with single and multiple part clamping.

Accessories: MTS chucking spigot set ER-041461 (M) or ER-041464 (A).

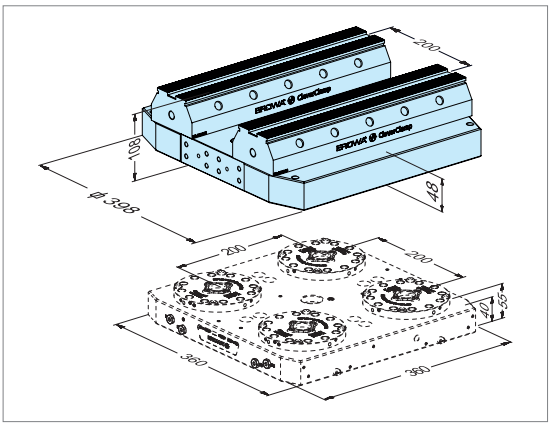

ER-130415 MTS pallet 398 x 398 / 250 CleverClamp duo

auto

Version: Aluminum pallet, 4-fold, pitch 250mm. With hard Z supports and 2 x CleverClamp rail 398. Excluding chucking spigots.

Application: Optimal accessibility for 5-axis machining with single and multiple part clamping.

Accessories: MTS chucking spigot set ER-041461 (M) or ER-041464 (A).

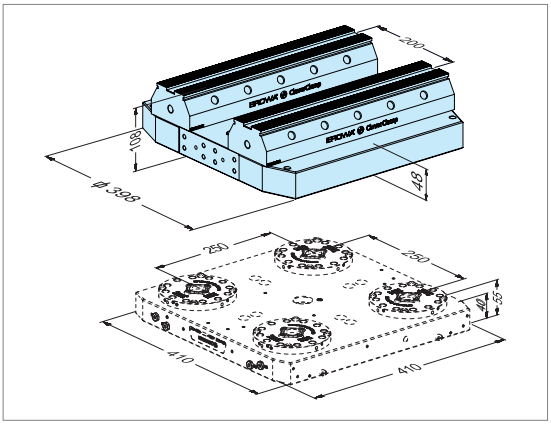

EROWA CleverClamp System

UPC Base rails

ER-099318	Base UPC mono CleverClamp

auto

Version	Combination of UPC aluminum pallet with 320 Clever-Clamp rail; centering segments and chucking spigots fitted. Z-Support hard.
Application	Optimal accessibility for 5-axis applications with single and multiple fixtures.

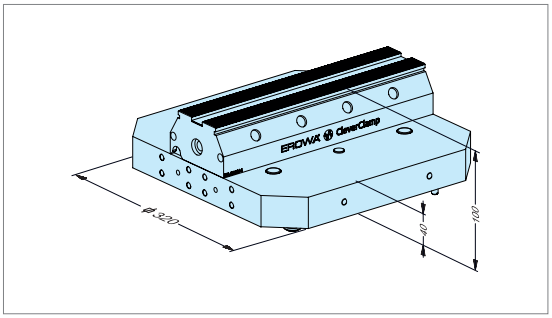

ER-099317	Base UPC duo CleverClamp

auto

Version	Combination of UPC aluminum pallet with two Clever-Clamp 320 rails; centering segments and chucking spigots fitted. Z-support hard.
Application	Optimal for multiple fixtures and for clamping big workpieces.

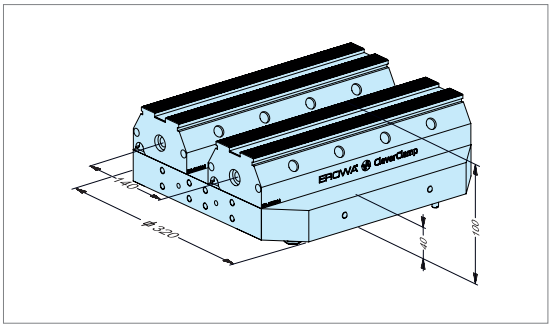

EROWA CleverClamp System

ITS Base rail

ER-099330	Pallet P ø 148 mono CleverClamp

auto 148

Version	Combination pallet P ø 148 with rail 218mm, Clever-Clamp, including chucking spigot F/M Production ER-010742.
Application	For use on all EROWA PowerChucks P and Production-Chucks 210 Combi. Optimal accessibility for 5-axis applications with single and multiple fixtures.
Please note	Compatible with EROWA MS Single and MTS 2.0 Single chucks (MTS chucking spigot P, ER-040999, required).

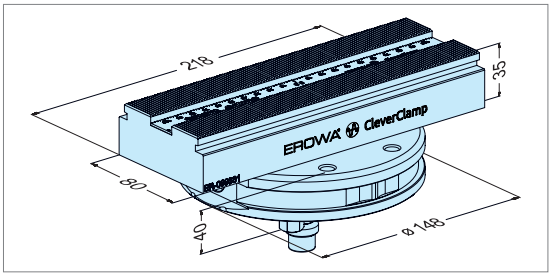

EROWA CleverClamp System

Pull down clamping elements

ER-099292 Pull Down Slide Multi Flat CleverClamp

Version	Steel, hardened, width 48mm, height 34mm, clamping and stop sides smooth.
Application	Pull-down element for clamping jobs with high clamping forces. Surface: smooth. Ideal for two-side machining and for clamping workpieces with machined surfaces.
Mounting	On a CleverClamp rail.
Important	Suitable for single or multiple fixtures.
Clamping force	Up to 28kN max. at a torque of 40Nm max.
Clamping stroke	Up to 4.1mm.

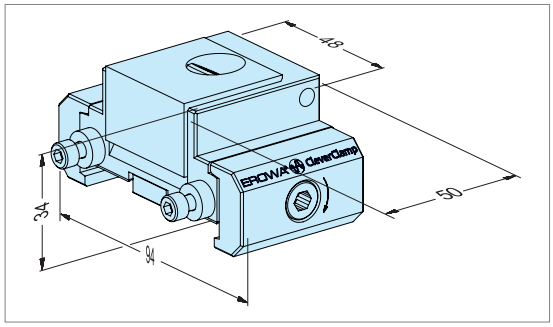

ER-099298 Pull Down Slide Multi Grip CleverClamp

Version	Steel, hardened, width 48mm, height 34mm, clamping and stop sides with grip contours.
Application	Pull-down element for clamping jobs with high clamping forces. Surface with grip contours for additional purchase.
Mounting	On CleverClamp rail.
Important	Suitable for single or multiple fixtures.
Clamping force	Up to 28kN max. with a torque of 40Nm max.
Clamping stroke	Up to 4.1mm.

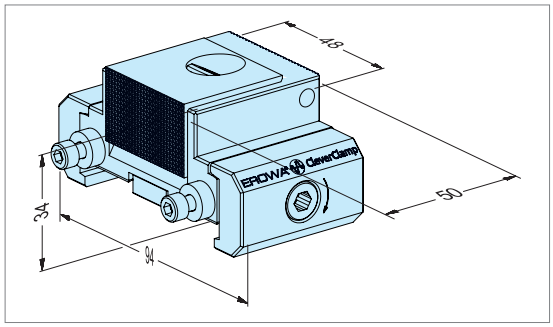

ER-099358 Twin Pull Down Slide Multi Grip CleverClamp

Version	Steel, hardened; width 94mm,height 44mm; clamping side with grip / stop side with grooved contours.
Application	Stop element in the modular CleverClamp system. In combination with the stop element (ER-099332).

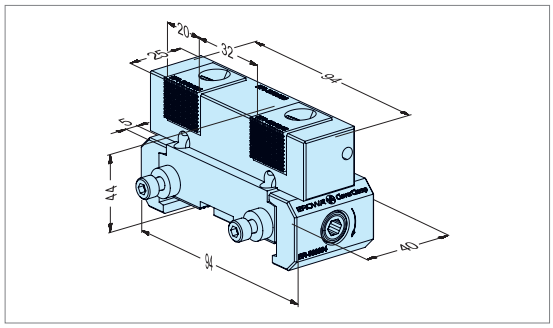

EROWA CleverClamp System

Linear clamping elements

ER-099285 Linear Slide Multi Flat CleverClamp

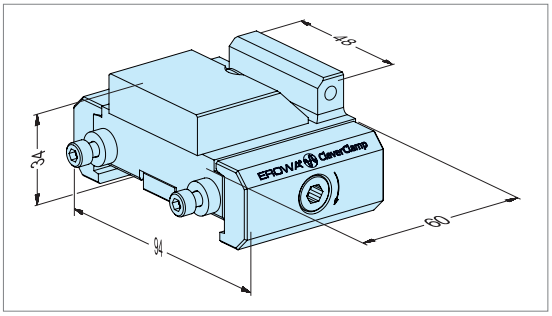

Version	Steel, hardened, width 48mm, height 34mm, clamping and stop sides smooth.
Application	For the linear clamping of workpieces with machined surfaces.
Mounting	On CleverClamp rail.
Important	Modularly compatible with all linear jaws. Suitable for single and multiple fixtures.
Clamping force	Up to 16kN max. with a torque of 40Nm max.
Clamping stroke	Up to 5mm.

ER-099286 Linear Slide Multi Grip CleverClamp

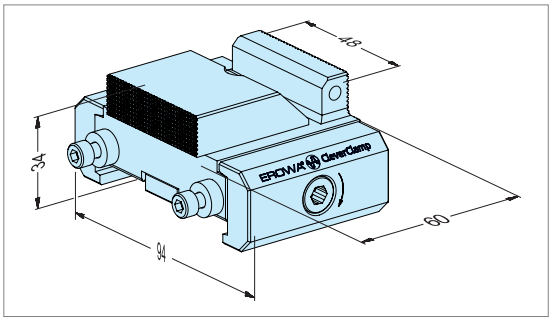

Version	Steel, hardened, width 48mm, height 34mm, clamping and stop sides with grip contours.
Application	Linear clamping with grip contours for additional purchase.
Mountaing	On CleverClamp rail.
Important	Modularly compatible with all linear jaws. Suitable for single and multiple fixtures.
Clamping force	Up to 16kN max. with a torque of 40Nm max.
Clamping stroke	Up to 5mm.

ER-099282 Linear Slide Multi Stamp CleverClamp

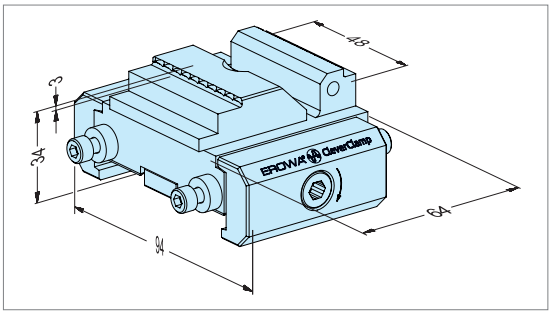

Version	Steel, hardened, width 48mm, height 34mm, clamping and stop sides with stamp contours
Application	Ideal for clamping blanks at the minimum clamping height of 3mm. Secure grip thanks to stamp technology for direct stamping. Can also be used for two-side machining.
Mounting	On CleverClamp rail.
Important	Modularly compatible with all linear jaws. Suitable for single and mutliple fixtures.
Clamping force	Up to 16kN max. with a torque of 40Nm max.
Clamping stroke	Up to 5mm.

ER-099277 Linear Slide Multi Stamp Wide CleverClamp

Version	Steel, hardened, width 94mm, height 34mm, clamping and stop sides with stamp contours.
Application	Ideal for clamping blanks at a minimum clamping height of 3mm. Secure grip thanks to stamp technology for direct stamping. Can also be used for two-side machining.
Mounting	On CleverClamp rail.
Important	Modularly compatible with all linear jaws. Suitable for single and multiple fixtures.
Clamping force	Up to 16kN max. with a torque of 40Nm max.
Clamping stroke	Up to 5mm.

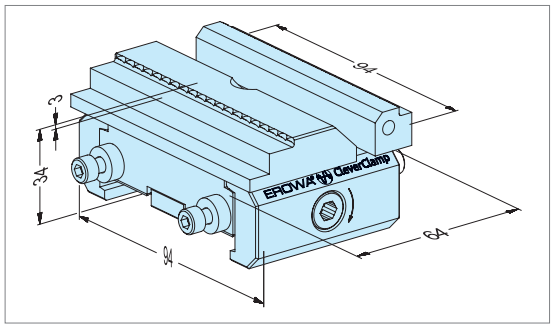

ER-099276 Linear Slide 5X Stamp CleverClamp

Version	Steel, hardened, width48mm, height 49mm, clamping side with stamp contours.
Application	Optimised machine spindle accessibility for 5-axis applications. Ideal for clamping blanks at a minimum clamping height of 3mm. Secure grip thanks to stamp technology for direct stamping.
Mounting	On CleverClamp rail.
Important	Modularly compatible with all linear jaws. Can be used for single and multiple fixtures.
Clamping force	Up to 16kN max. with a torque of 40Nm max.
Clamping stroke	Up to 5mm.

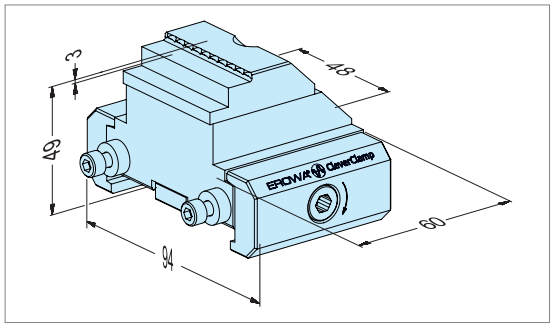

ER-099275 Linear Slide 5X Stamp Wide CleverClamp

Version	Steel, hardened, width 94mm, height 49mm, clamping side with stamp contours.
Application	Optimised machine spindle accessibility for 5-axis applications. Ideal for clamping blanks at a minimum clamping height of 3mm. Secure grip thanks to stamp technology for direct stamping.
Mounting	On CleverClamp rail.
Important	Modularly compatible with all linear jaws. Can be used for single and multiple fixtures.
Clamping force	Up to 16kN max. with a torque of 40Nm max.
Clamping stroke	Up to 5mm.

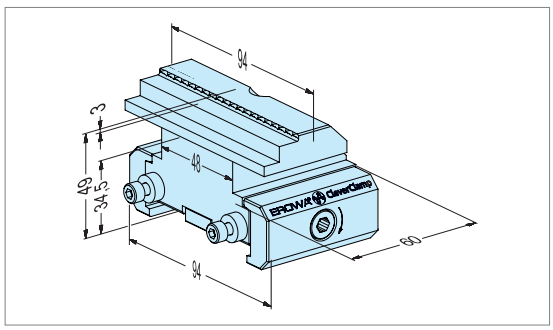

EROWA CleverClamp System

Stop elements

ER-099272 Stop Flat/Grip CleverClamp

Version	Steel, hardened, width 48mm, height 34mm; two stop sides: one smooth, one with grip contours.
Application	Stop element in the modular CleverClamp system. Smooth stop side for workpieces with a machined surface, grip side for additional purchase.
Mounting	On CleverClamp rail.

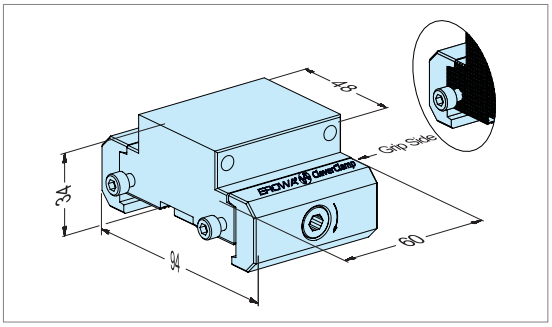

ER-099332 Stop grooved CleverClamp

Version	Steel, hardened; width 94mm, height 33mm; grooved.
Application	Stop element in the modular CleverClamp System. In combination with the double pull-down element (ER-099358).
To fit	On CleverClamp rails.

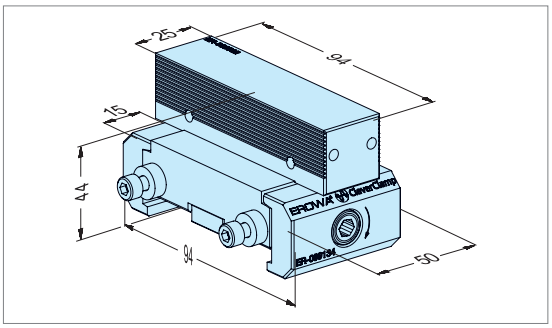

ER-099269 Stop Multi Stamp CleverClamp

Version	Steel, hardened, width 48mm, height 34mm, with stamp contours.
Application	Stop element in the modular CleverClamp system. Stop element with stamp contours, ideal in combination with stamp clamping elements for clamping blanks at a mimimum clamping height of 3mm.
Mounting	On CleverClamp rail.

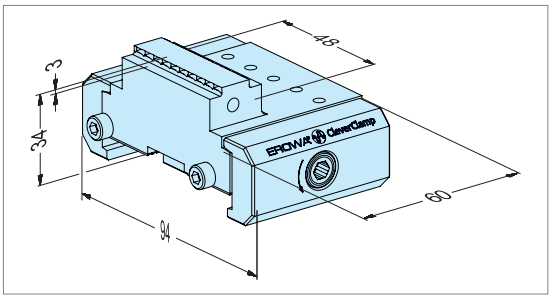

ER-099267 Stop Multi Stamp Wide CleverClamp

Version	Steel, hardened, width 94mm, height 34mm, with stamp countours.
Application	Stop element in the modular CleverClamp system. Stop element with stamp contours, ideal in combination with stamp clamping elements for clamping blanks at a minimum clamping height of 3mm.
Mounting	On CleverClamp rails.

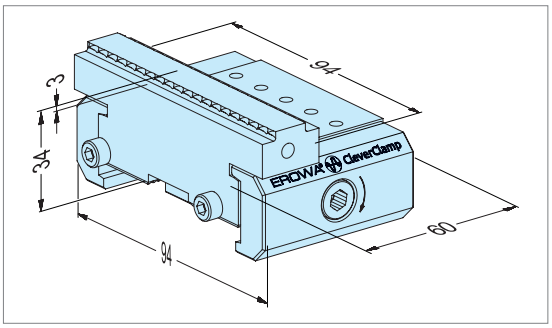

ER-099263 Stop 5X Stamp CleverClamp

Version	Steel, hardened, width 48mm, height 49 mm, with stamp contours.
Application	Stop element in the modular CleverClamp system. Stop element with better machine spindle accessiblity for 5-axis applications. With stamp contours, ideal in combination with stamp clamping elements for clamping blanks at a minimum clamping height of 3mm.
Mounting	On CleverClamp rail.

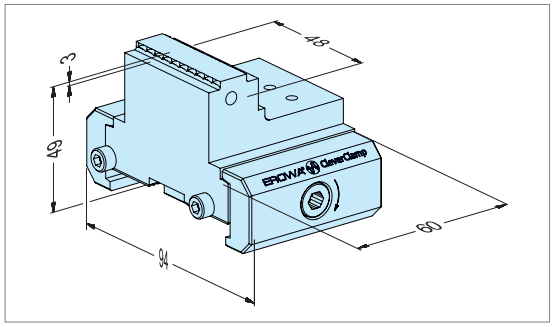

ER-099258 Stop 5X Stamp Wide CleverClamp

Version	Steel, hardened, width 94mm, height 49mm, with stamp countours.
Application	Stop element in the modular CleverClamp system. Stop element with better machine spindle accessibility for 5-axis applications. With stamp countours, ideal in combination with stamp clamping elements for clamping blanks at a minimum clamping height of 3mm.
Mounting	On CleverClamp rail.

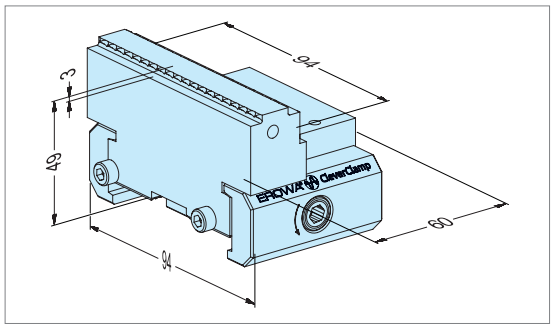

EROWA CleverClamp System

Parallel supports

ER-099204	**Support 20 CleverClamp**
ER-099206	**Support 24 CleverClamp**
ER-099227	**Support 29 CleverClamp**
ER-099228	**Support 31 CleverClamp**
ER-099229	**Support 34 CleverClamp**
ER-099230	**Support 39 CleverClamp**
ER-099231	**Support 44 CleverClamp**
ER-099232	**Support 46 CleverClamp**

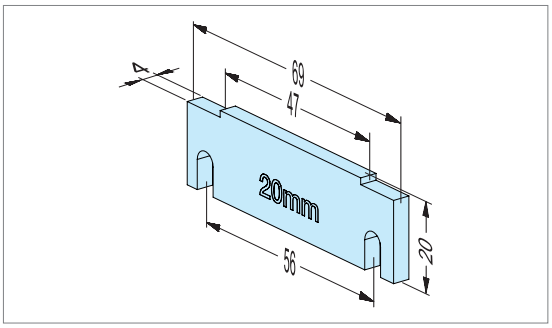

Version Steel, hardened, width 47mm, height 46mm.
Application Ground support for setting the workpiece clamping height between the CleverClamp clamping and stop elements.
Important Supports of the heights 34, 39, 44 and 46 can only be used in combination with the 5-axis clamping and stop elements.

ER-099233	**Support 20 Wide CleverClamp**
ER-099234	**Support 24 Wide CleverClamp**
ER-099235	**Support 29 Wide CleverClamp**
ER-099236	**Support 31 Wide CleverClamp**
ER-099237	**Support 34 Wide CleverClamp**
ER-099238	**Support 39 Wide CleverClamp**
ER-099239	**Support 44 Wide CleverClamp**
ER-099240	**Support 46 Wide CleverClamp**

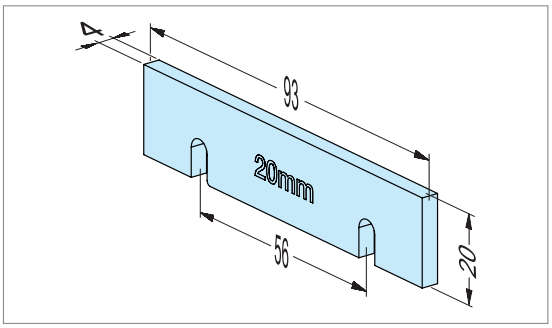

Version Steel, hardened,width 93mm, height 46mm.
Application Ground support for setting the workpiece clamping height between the CleverClamp clamping and stop elements.
Important Supports of the heights 34, 39, 44 and 46 can only be used in combination with the 5-axis clamping and stop elements.

EROWA CleverClamp System

Accessories

ER-099243 Elevation for rail H60 CleverClamp

Version	Steel, hardened, height 60mm, width 80mm, length 130mm.
Application	CleverClamp 5-axis elevation - enables optimal machine spindle accessibility in 5-axis applications.
Mounting	On CleverClamp rail.

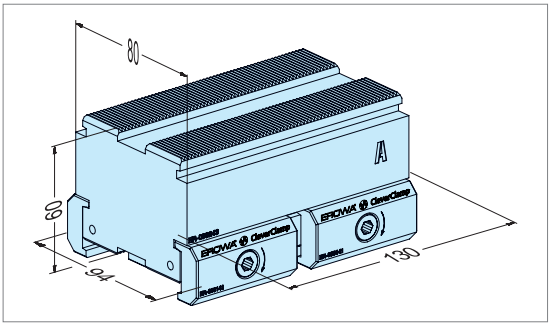

ER-099246 Quick Chuck 100 P CleverClamp

Version	CleverClamp carrier element with QuickChuck 100P, manual.
Application	Adapter between CleverClamp and EROWA ITS pallets/ holders.
Mounting	On CleverClamp rail.

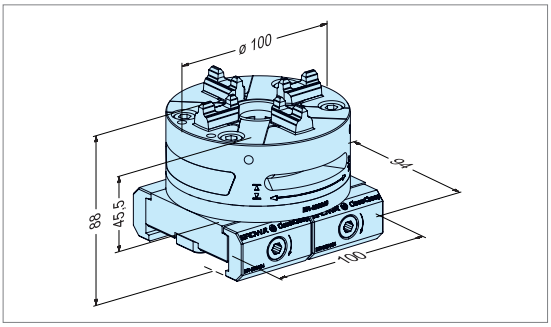

ER-099166 Stop Jaw Flat / Grip Wide CleverClamp

Version	Steel, hardened, width 94mm, height 34mm, one side smooth, the other with grip contours.
Application	Widening the stop surface for better grip when clamping wide workpieces.
Mounting	Use the bolts supplied to fit it to the front of the Clever-Clamp clamping or stop elements of your choice.
Important	Can be ideally combined for use with the 94mm-width linear jaws.

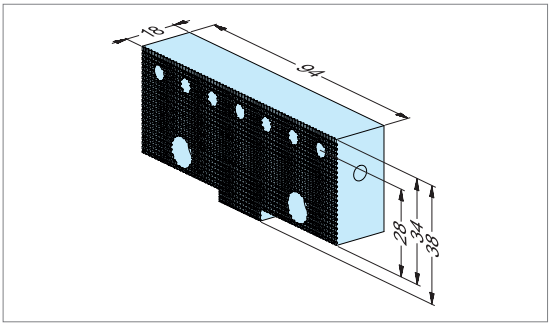

ER-099195 Stop Jaw Stamp Wide CleverClamp

Version	Steel, hardened, width 94mm, height 34mm, with stamping.
Application	Widening the stamping stop surface for better grip when clamping wide workpieces at minimum clamping height with stamping.
Mounting	Place stop jaw behind the clamping or stop element of your choice and attach with lateral bolt.

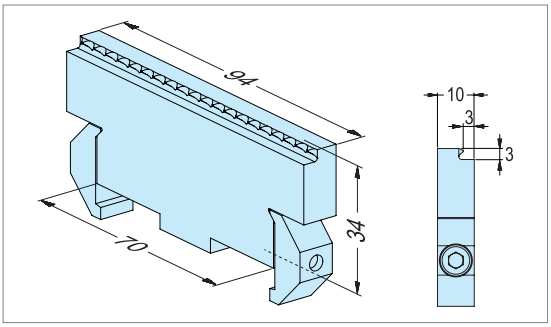

EROWA CleverClamp System

Accessories

ER-099164	Stop Jaw Soft Wide CleverClamp

Version	Steel, soft, width 94mm, height 34mm.
Application	Soft stop jaw, ideal for milling workpiece-specific clamping contours.
Mounting	Use the bolts supplied to fit it to the front of the Clever-Clamp clamping or stop elements of your choice.

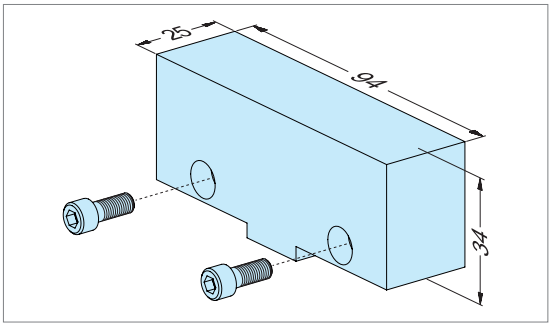

ER-099079	Pull Down Jaw Flat CleverClamp
ER-099092	Pull Down Jaw Grip CleverClamp

Version	Steel, hardened, stop side smooth or with grip contours.
Application	ER-099079: stop side smooth - ideal for clamping workpi-eces with machined surfaces. ER-099092: stop side with grip contours for additional grip.
Mounting	Can be used on all CleverClamp pull-down clamping elements.

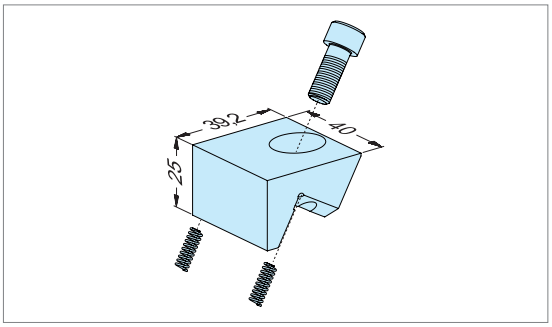

ER-099098	Linear Jaw Flat CleverClamp
ER-099099	Linear Jaw Grip CleverClamp

Version	Steel, hardened, width 48mm, stop side smooth or with grip contours.
Application	ER-099098: stop side smooth - ideal for clamping workpi-eces with machined surfaces. ER-099099: stop side with grip contours for additional grip.
Mounting	Can be used on all CleverClamp linear clamping elements.

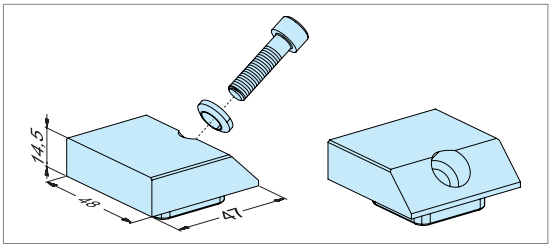

ER-099123	Linear Jaw Soft CleverClamp

Version	Steel, soft, width 48mm.
Appliacation	To produce jaws with contours of your choice.
Mounting	Can be used on all CleverClamp linear clamping elements.

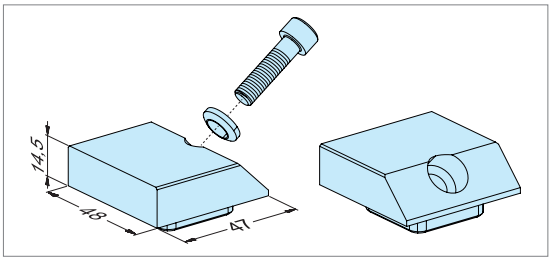

ER-099126 Linear Jaw Soft Wide CleverClamp

Version	Steel, soft, width 94mm.
Application	To produce jaws with contours of your choice.
Mounting	Can be used on all CleverClamp linear clamping elements.

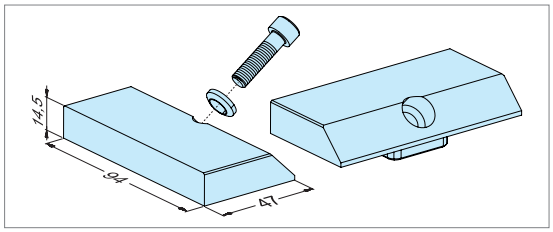

ER-099334 MTS Spigot Set 2 automated CleverClamp

auto

Version	1 centering spigot / A, 1 compensation spigot / A.
Application	For CleverClamp rails „320 H60 automated“ and „398 automated“, which are automatically loaded / unloaded in the MTS System.
To be fitted	From below to the CleverClamp base rails.

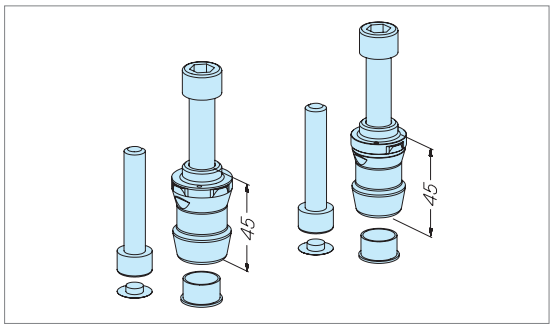

ER-099437 MTS Spigot Set 2 manuel CleverClamp

Version	1 centering spigot, 1 compensation spigot / A.
Application	For CleverClamp rails „320 H60 Manual“ and „398 H60 Manual“, which are manually loaded / unloaded in the MTS systesm.
To be fitted	From below to the CleverClamp base rails.

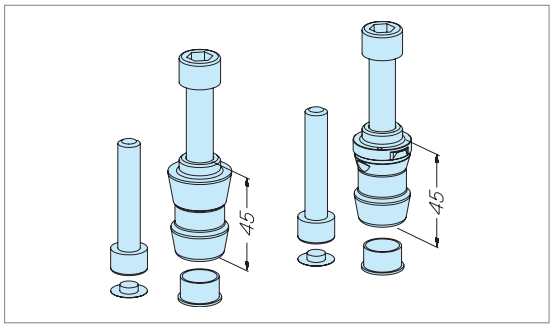

ER-099201 MillStop

Version	Adjustable steel stop.
Application	Lateral stop for ClampSet and CleverClamp clamping or stop element, as well as for blank vise 148.
To fit	Use bolts supplied to fit it laterally to the desired clamping or stop elements

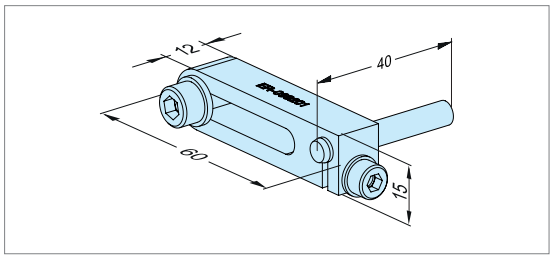

ER-082273 Magnetic stop

Version	Stop made of anodized aluminum.
Application	Magnetic stop used for positioning workpieces in vises.
Important	Remove the magnetic stop before machining the part.

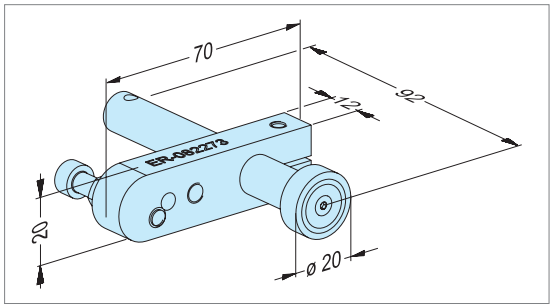

EROWA ProductionChuck 210

Palletizing system with centralized material pass-through

The ProductionChuck 210 combines the time-tested EROWA precision with a compact design, enormous clamping power and stability. The tooling system has been designed for high machining forces in chip-cutting. In addition, the round design makes for optimal workpiece accessibility.

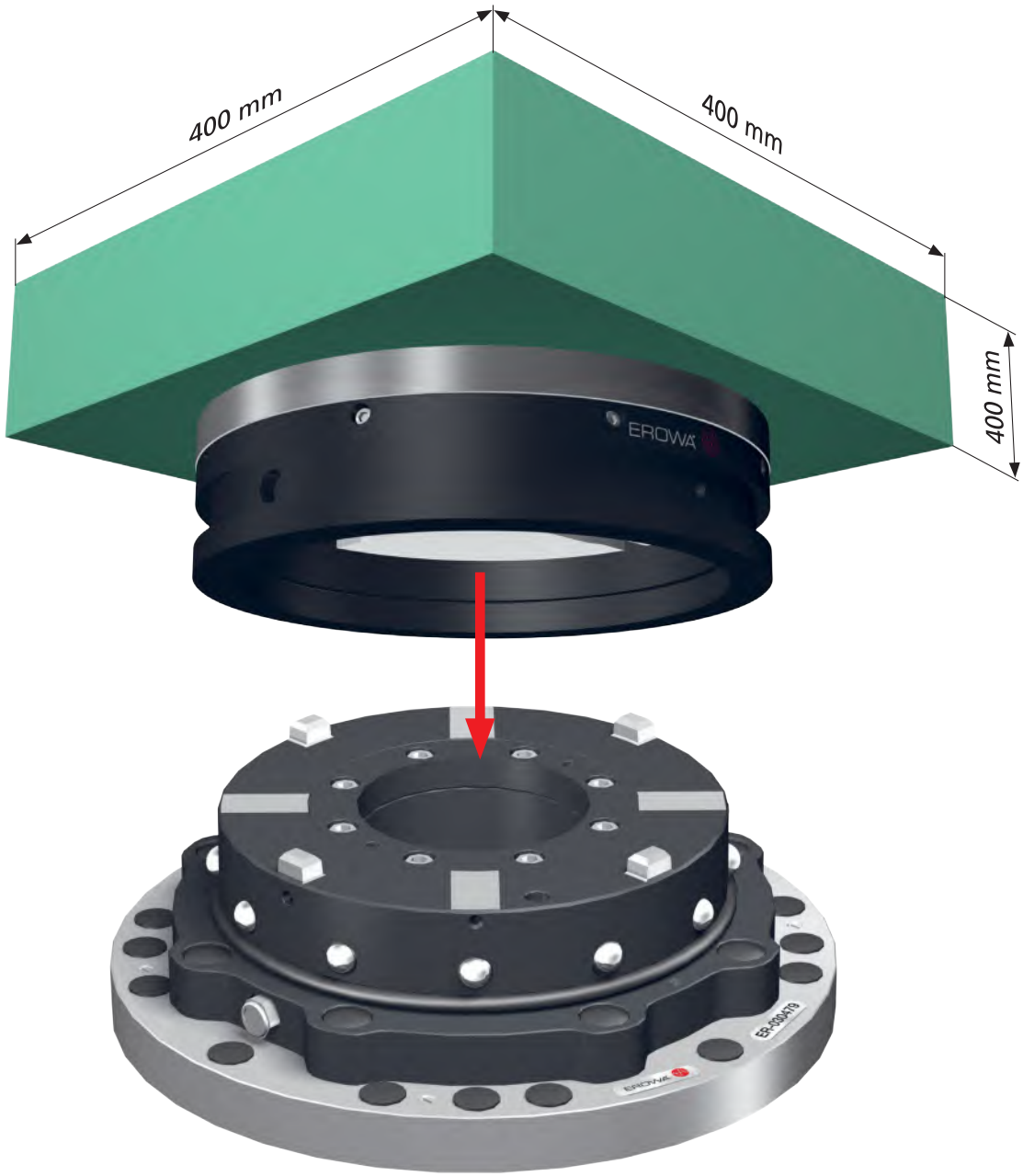

Applications

Handling

Manual / Loading facility / Robot

Function

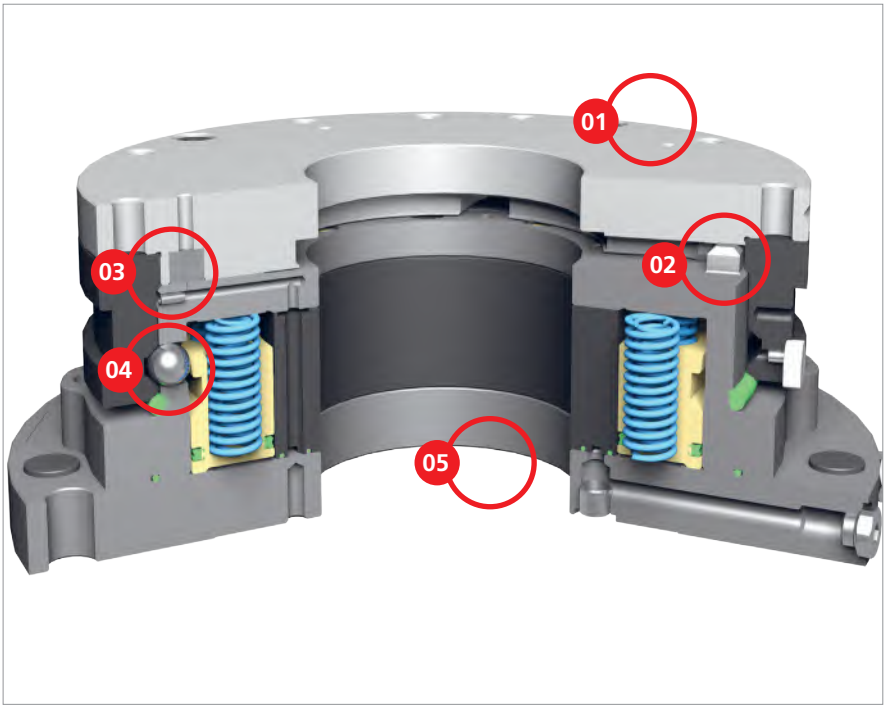

01 | Mounting
Workpieces, fixtures and plates are directly mounted on the PC 210 pallet.

02 | Centering system
The widely spaced centering system enables the transfer of maximum torque.

03 | Z-supports
The Z-supports ensure an optimal reduction of the tilting moment. They are automatically cleaned with air. Stagnation pressure is used to check whether the pallet is clamped correctly.

04 | Ball lock
The self-locking ball lock generates a clamping power of 20,000N.
The chuck is clamped without pressure through a spring package.

05 | Material pass-through
Rod material of up to ø 81 mm can be led directly through the chuck. The ø 81 mm boreholes also provides for air, hydraulic and vacuum lines to operate the fixtures that are clamped on pallets.

Technical data - ProductionChuck 210

	ProductionChuck 210
Pallet size	ø 210 mm
Chuck dimensions	H = 55 mm x ø 224 mm H = 75 mm x ø 254 mm
System height (chuck and pallet)	80 mm / 100 mm
Recommended workpiece size	up to 400 x 400 x 400 mm
Repeatability	< 0.002 mm
Pallet indexation	4 x 90°
Clamping power	20,000 N / 29,000 N
Clamping power (central PowerChuck P)	9,000 N generated by spring power
Opening pressure	min. 7.5 bar (pneumatically)
Chuck fits directly to:	
– machine tables with T-slots	50, 63, 100 mm
– round tables with T-slots	4 x 90°, 45°

EROWA ProductionChuck 210 in action

Maximum flexibility, highest precision, efficient automation

The ProductionChuck 210 is the perfect solution for your automated manufacturing. With its compact, robust design and sophisticated functionality, it takes your 5-axis machining to a whole new level.

FACTS

- Clamping power up to 29,000 N
- High degree of stability
- Compact design
- Repeatability < 0.002 mm
- Central borehole ø 81 mm
- Can be automated



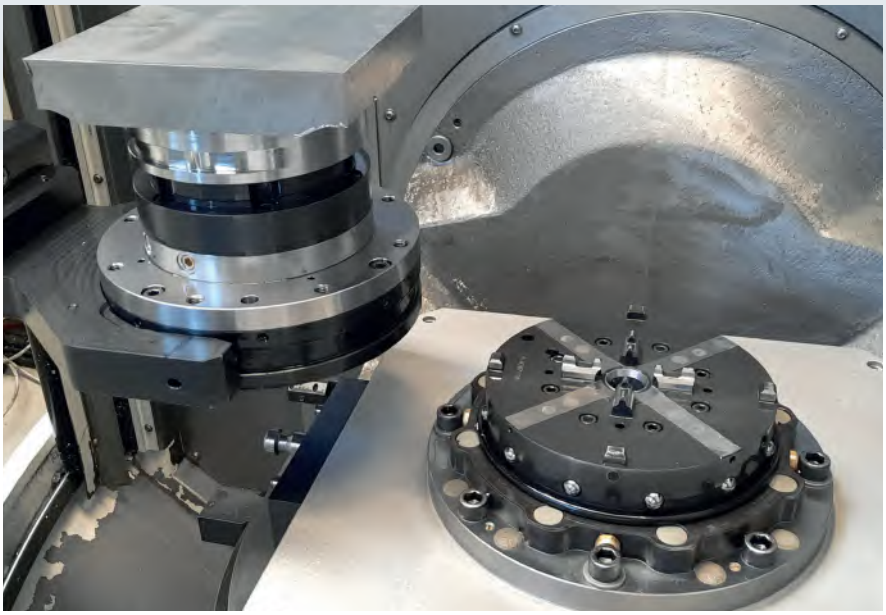

The ProductionChuck 210 palletizing system can be seamlessly automated, with EROWA providing tailored handling solutions for any application and technology.



The clamping mechanism located around the circumference ensures a stable connection between the chuck and the pallet for high precision – even with large workpieces.



Equipped with an integrated EROWA PowerChuck P, the ProductionChuck 210 Combi handles both ITS and ProductionChuck 210 pallets effortlessly – ensuring maximum flexibility and minimal changeover time.



The palletizing system is also highly suitable for use on lathes and circular grinding machines.

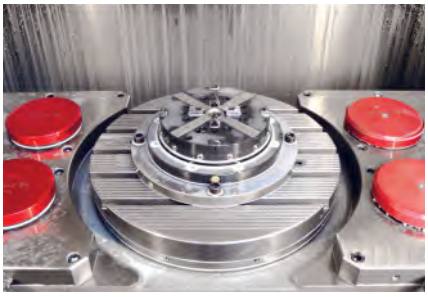

PC 210 chucks are robust and compact in design. The low profile design offers plenty of space for workpieces and optimum accessibility for 5-axis machining.



Thanks to their wide spacing, the Z-supports deliver stable, precise support – even when handling larger workpieces.

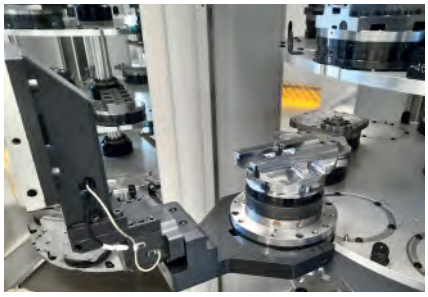

Palletized fixtures in the robot magazine. The PC 210 pallets are the practical basis for the accommodation of workpieces, self-centering vises and fixtures.

EROWA ProductionChuck 210

The components

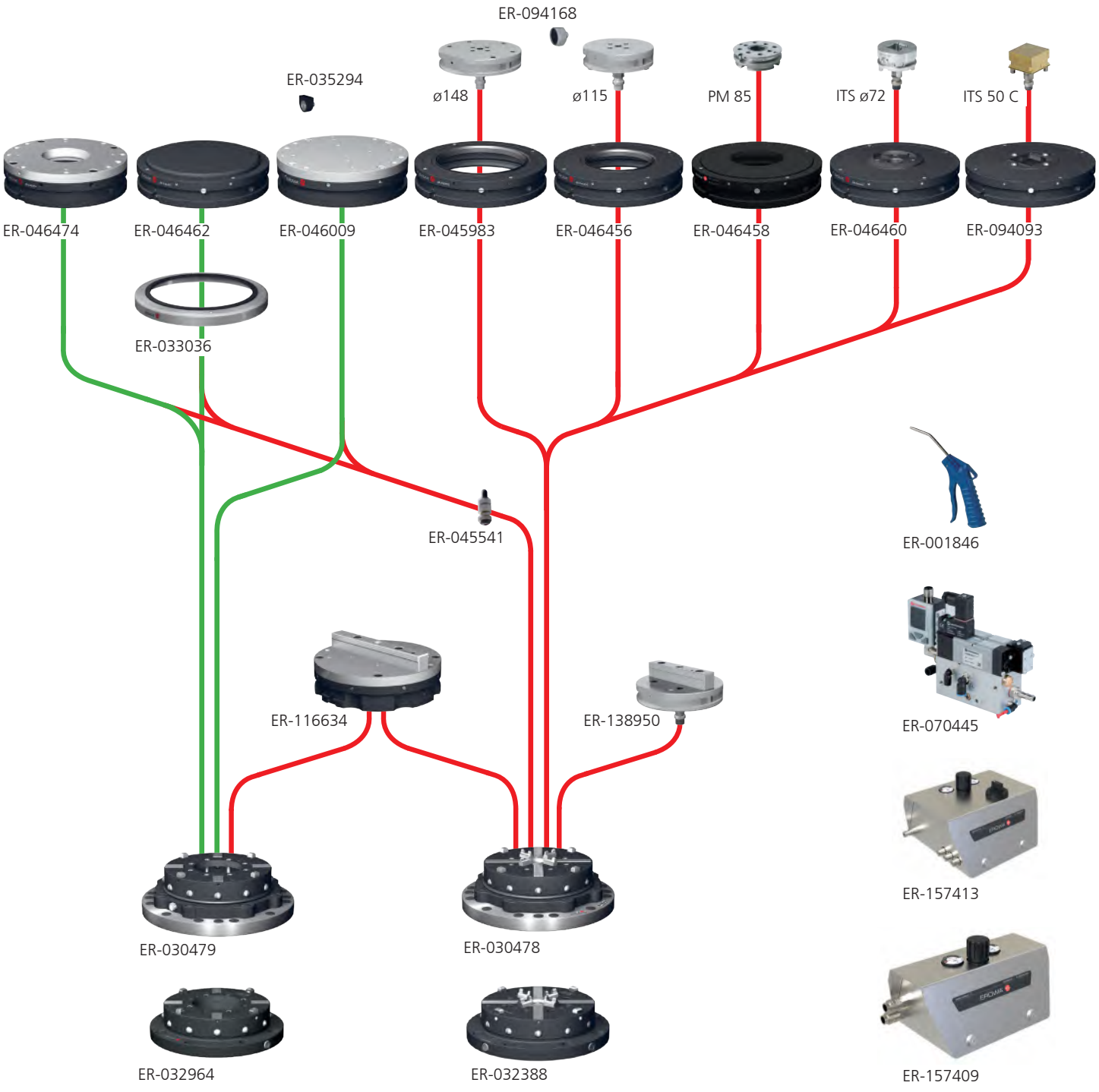

To make it easier for you to find your way about the fields of application for EROWA products, we use the following symbols in all our documents:


1. Manual operation


2. Operate with compressed air jet


3. Operate with manual valve


4. Operate with manual control unit



5. Operate with electro-pneumatic control unit


6. With central flushing clearance


7. Suited for submerged operation



8. Corrosion-resistant material



9. Suited for automatic operation


10. Handling with EROWA Robot gripper S


11. Handling with EROWA Robot gripper Combi


12. Handling with EROWA Robot gripper C



13. Handling with EROWA Robot gripper 72



14. Handling with EROWA Robot gripper 115



15. Handling with EROWA Robot gripper 148



16. Handling with EROWA Robot gripper RN PC 210


17. Handling with EROWA Robot gripper RCS


18. Handling with EROWA Robot gripper WGS-500



EROWA PRODUCTIONCHUCK 210

ProductionChuck 210	Chucks	124
ProductionChuck 210	Pallets	126
ProductionChuck 210	Operation	128
ProductionChuck 210	Auxiliary Equipment	129


For chip-removing processes


For EDM sinking


For WEDM

EROWA ProductionChuck 210

Chucks

Technical data	ProductionChuck 210
Repeatability	< 0.002 mm
Indexing	4 x 90°
Clamping power	20,000 N
Clamping power (central PowerChuck P)	9,000 N
Clamping	with spring tension (clamped without pressure)
Opening pressure	min. 7.5 bar (pneumatic)
Max. permitted speed	4,500 min -1

ER-030479 ProductionChuck 210

Version	Chuck for high machining forces in chip cutting. Through-borehole ø 81 mm.
Connections	Laterally or from below with two lines.
Operation	With air gun, laterally. With control unit, through the two connections laterally or from below.
Application	On milling machines, lathes and grinding machines. To clamp pallets PC 210.

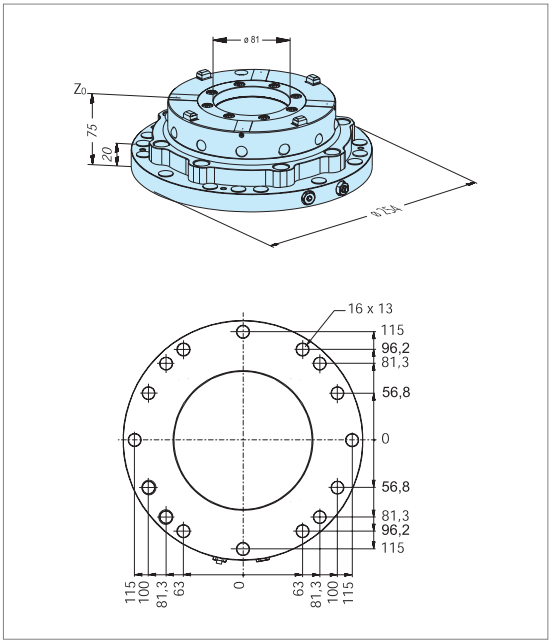

ER-032964 ProductionChuck 210 without base plate

Version	Chuck for high machining forces in chip cutting. Through-borehole ø 81 mm.
Application	On milling machines, lathes and grinding machines. To clamp pallets PC 210.
Connections	2 air connections: on the sides and from below through customized base plate.
Operation	With air gun or control unit.
Note	Base plate must be customized.

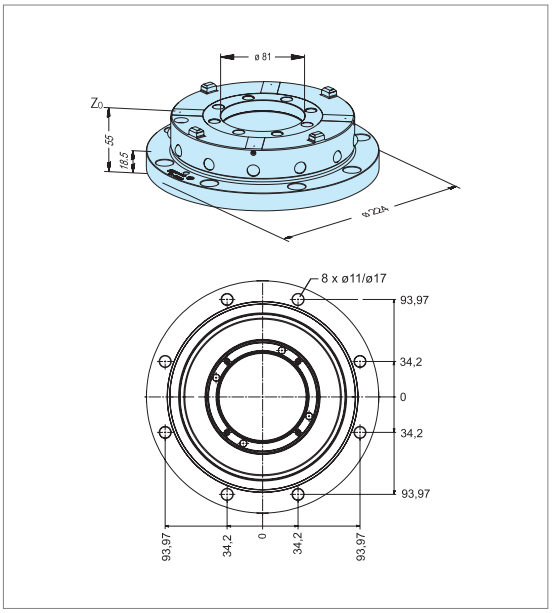

EROWA ProductionChuck 210

Chucks

ER-030478 ProductionChuck 210 Combi

Version	Chuck for strong machining forces in chip-cutting operations. PC 210 with integrated PowerChuck P.
Connections	Laterally or from below with two lines.
Operation	With air gun, laterally. With control unit, through the two connections laterally or from below.
Application	On milling machines, lathes, grinding machines and EDM centers. To clamp pallets PC 210, pallets ø 148, ø 115, ITS holder ø 72 and 50 C.

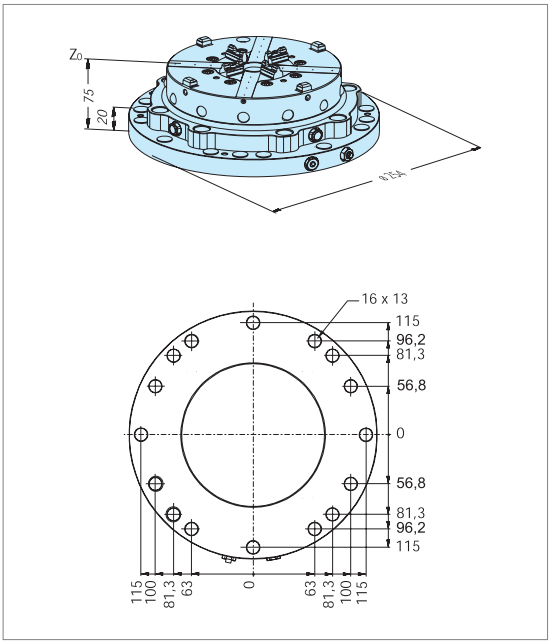

ER-032388 ProductionChuck 210 Combi without base plate

Version	Chuck for high machining forces in chip-cutting operations. PC 210 with integrated PowerChuck P.
Application	On milling machines, lathes, grinding machines and EDM centers. To clamp pallets PC 210, ITS pallets ø 148, ø 115, ITS ø 72 and 50 C holders.
Connections	2 air connections: on the sides and from below through customized base plate.
Operation	With air gun or control unit.
Note	Base plate must be customized.

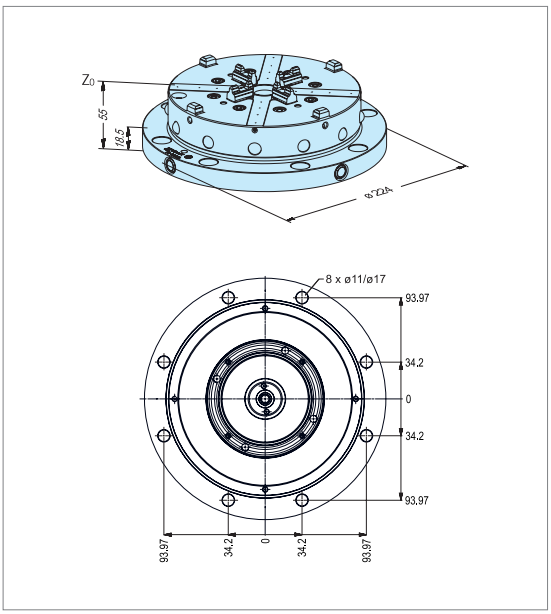

EROWA ProductionChuck 210

Pallets

ER-046473 Clamping ring RN PC 210

auto 210

Version	Steel, hardened.
Application	Clamping ring for centering pallet PC 210 and centering pallet PC 210 / ø 81. Can be automated with gripper PC 210 RN (option).

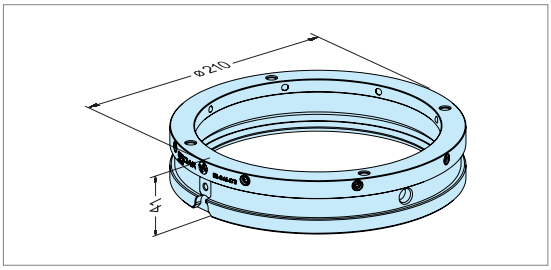

ER-042865 PC Centering pallet 210

Version	Steel, without clamping ring (option ER-046473).
Fitting	8 x M10 attachment threads and two ø 10 boreholes.
Application	To accommodate workpieces, clamping jigs and plates PC 210.

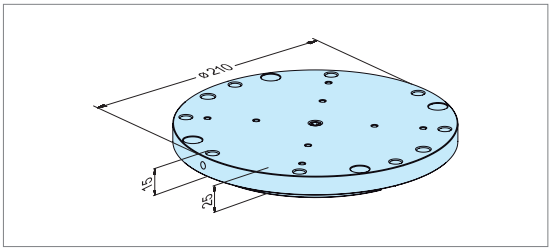

ER-042866 PC Centering pallet 210 ø 81

Version	Steel, without clamping ring (option ER-046473).
Fitting	8 x M10 attachment threads and two ø 10 boreholes.
Application	To accommodate workpieces, clamping jigs and plates PC 210.

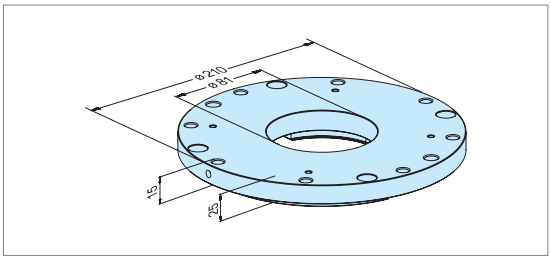

ER-046009 Pallet RN PC 210

auto 210

Version	Steel. Centering segments integrated.
Assembly	8 x M10 attachment threads and two ø 10 boreholes.
Application	To clamp workpieces, clamping jigs and pallets PC 210. Can be automated with gripper RN PC 210 (option).

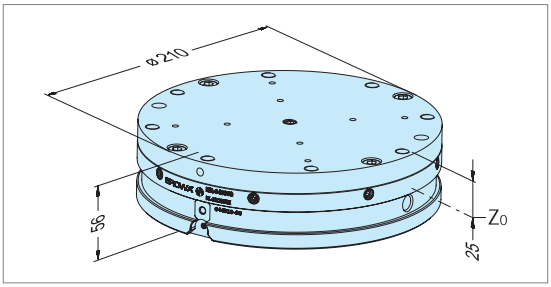

ER-046474 Pallet RN PC 210 ø 81

auto 210

Version	Steel. Centering segments integrated. Through borehole ø 81 mm.
Fitting	8 x M10 attachment threads and two ø 10 boreholes.
Application	To accommodate workpieces, clamping jigs and plates PC 210. Can be automated with gripper RN PC 210 (Option).

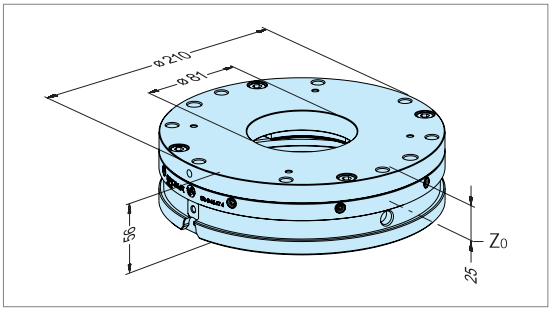

ER-116634 Alignment pallet RN PC 210

auto 210

Version	Pallet PC 210 with ground alignment rail and four Z-measuring surfaces.
Application	Alignment of the angle position and determination of the Z-values of PC 210 chucks.

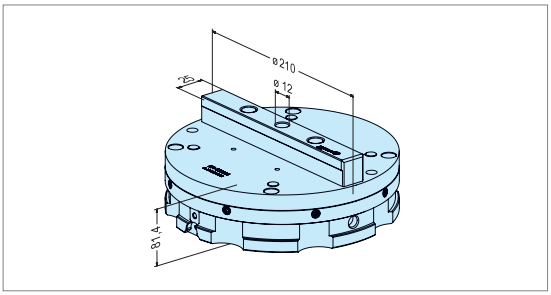

ER-138950 Alignment pallet ø 148 P

INOX auto 148

Version	Pallet P ø 148 with ground alignment rail and four Z-measuring surfaces, including chucking spigot F/M Production.
Application	Alignment of the angle position and determination of the Z-values of ITS Chucks 100 P, PowerChucks P and PC 210 Combi chucks.

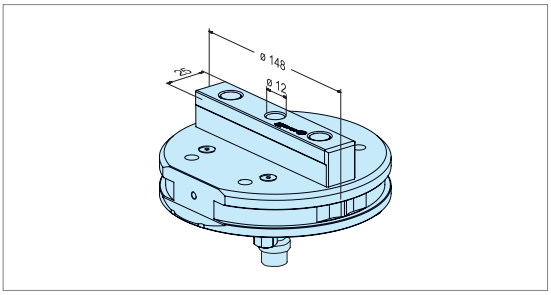

ER-115521 Pallet ø 148 P

INOX auto 148

Version	Steel, rust-resistant. Centering integrated in the pallet. With optimized center of mass.
Application	To accommodate workpieces and fixtures for chip-cutting production.
Fitting a blank	Through the pallet with M8 bolts or through the blank with M10 bolts.
Please note	Compatible with EROWA ProductionChuck 210 Combi.

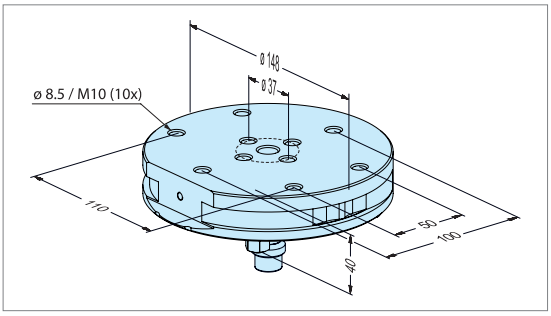

ER-045541 Chucking spigot for PC 210

Version	Fixed type, manual. 1 spigot.
Application	In pallets PC 210 for chip-cutting machining processes.

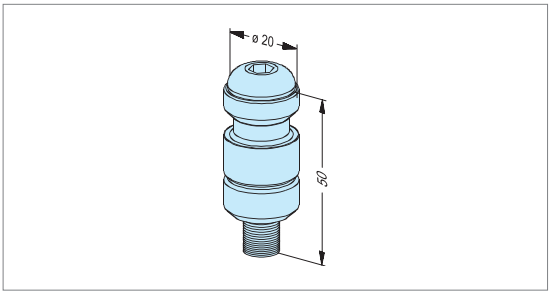

Please note: Further pallets and electrode holders for the ProductionChuck 210 Combi can be found from pages 216.

EROWA ProductionChuck 210

Operation

ER-157413 Control box 1-fold with booster

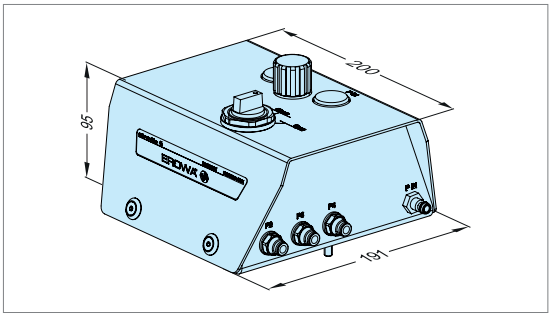

Version	Manual control box for 1 chuck. Integrated booster with a maximum loading ratio of 1:2. To control the opening / reclamping / cleaning functions. Pressure adjustable, display through a manometer. Includes a set of tubes.
Connections	1 input (P IN) and 3 outputs (P2 Open / P3 Clean / P4 Reclamp).
Application	To operate chuck types ITS, ITS Compact, CombiChuck, PowerChuck P, VPC, UPC or PM Tooling.

ER-070445 Control unit with monitoring

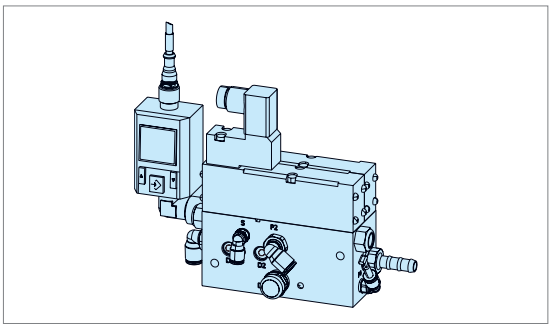

Version	Electropneumatic valve. Outputs for chucks: opening/cleaning/reclamping. 24 V, incl. mounting accessories and 3 m connection hose.
Application	Operation and monitoring of machine-integrated chucks, for instance through the CNC M-function.

ER-001846 Air jet

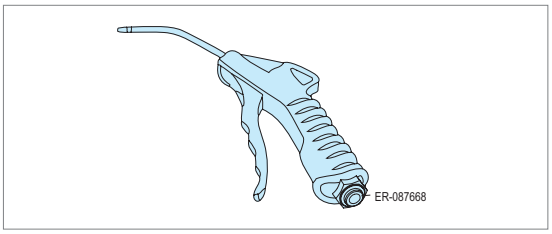

Version	Plastic, smooth regulation of air flow, connection 1/4'', inside thread.
Application	Operation of manual chucks.
Note	Not suitable for operating MTS+ and MTS81.
Option	Volume and pressure reduction to air jet (ER-087668). Pressure build up is reduced if Air Jet is not pushed against an air valve.

ER-157409 Booster box

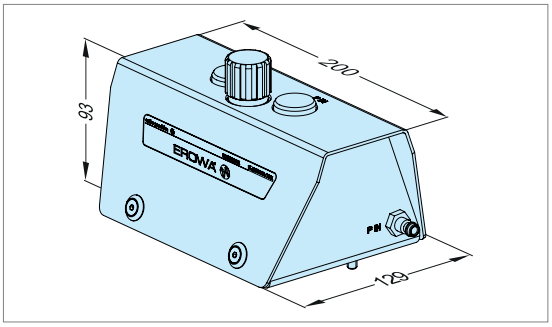

Version	Booster with a maximum loading ratio of 1:2. Pressure adjustable, display through a manometer.
Connections	1 input (P IN) and 2 outputs (P OUT High (boosted) / P OUT Low (network pressure)). All connections with fast couplings for tube inside ø 8 mm.
Application	To ensure the required pneumatic pressure in case of deficient network pressure and pressure fluctuations.
Please note	To be integrated in the air circuit near the user.

EROWA ProductionChuck 210

Auxiliary Equipment

ER-094093 Sealing ring ITS 50 C for PC 210

auto 210

Version Steel hardened.

Application Prevents penetration of chips and dirt into the ProductionChuck 210 Combi by application of EROWA electrode holders C. For automatic handling with gripper RN PC 210 (option).

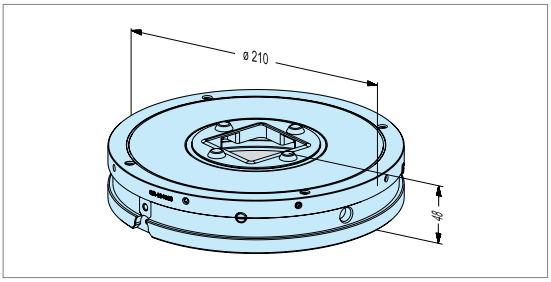

ER-046460 Sealing ring holder RN ø 72 PC 210

auto 210

Version Steel hardened.

Application Prevents penetration of chips and dirt into the ProductionChuck 210 Combi by application of EROWA ITS holders ø 72. For automatic handling with gripper RN PC 210 (option).

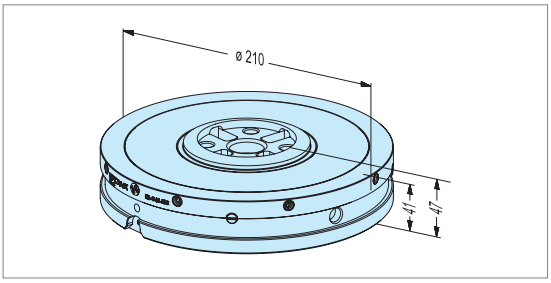

ER-046458 Sealing ring holder RN ø 85 PC 210

auto 210

Version Steel hardened.

Application Prevents penetration of chips and dirt into the ProductionChuck 210 Combi by application of EROWA ITS pallets ø 85. For automatic handling with gripper RN PC 210 (option).

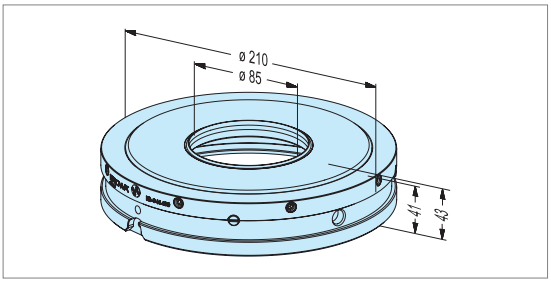

ER-046456 Sealing ring holder RN ø 115 PC 210

auto 210

Version Steel hardened.

Application Prevents penetration of chips and dirt into the ProductionChuck 210 Combi by application of EROWA pallets ø 115. For automatic handling with gripper RN PC 210 (option).

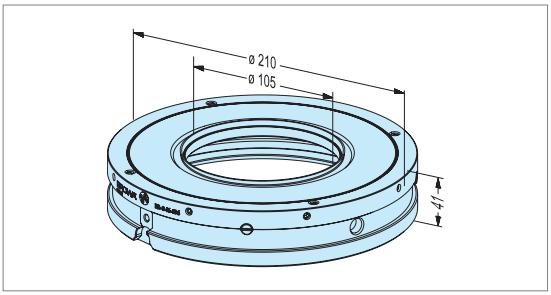

ER-045983 Sealing ring holder RN ø 148 PC 210

auto 210

Version Steel hardened.

Application Prevents penetration of chips and dirt into the ProductionChuck 210 Combi by application of EROWA pallets ø 148. For automatic handling with gripper RN PC 210 (option).

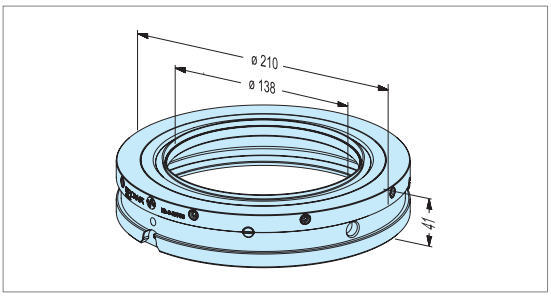

EROWA ProductionChuck 210

Auxiliary Equipment

ER-046462 Cover RN PC 210



Version Steel hardened.

Application Prevents penetration of chips and dirt into the Production-Chuck 210 and ProductionChuck 210 Combi. For automatic handling with gripper RN PC 210 (option).

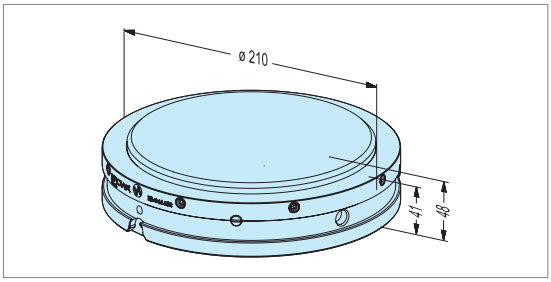

ER-045243 PC 210 Sealing ring

Version Holder with wiper.

Application For use on ProductonChuck 210 Combi.
To seal the outer balls if ITS 50 standard electrode holders or other workpiece carriers without PC sealing ring holders PC 210 are used.

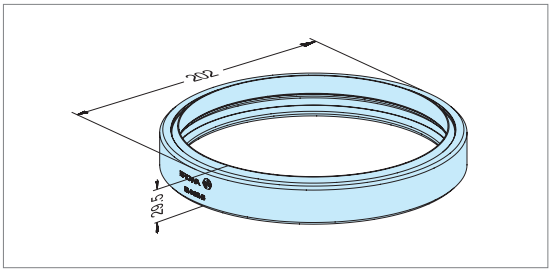

ER-033036 Covering ring PC 210

Application Covering ring for the attachment bolts of the PC 210: ER-030479, ER-030478 (Recommended for application on lathes).

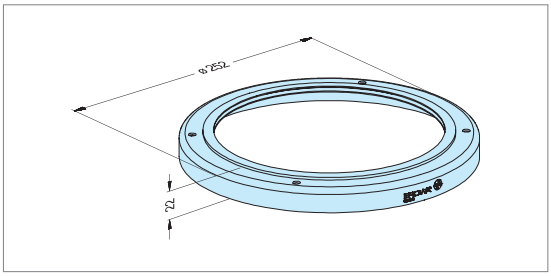

ER-035294 EWIS™ Rapid chip with chip holder RCS with chip ø 3 x 13.5mm

Version Holder with built-in data carrier. EWIS chip: read only.

Application To build into RCS coupling, PalletSet W holder and Basic WEDM holder.

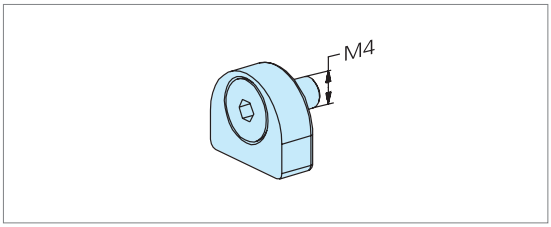

ER-094168 EWIS™ rapid chip with holder SW14 Length 8mm (grey)

Version Sleeve fitting with built-in data carrier.
EWIS Rapid chip: read only.

Application In any EROWA electrode holder and pallet which has been prepared for it.

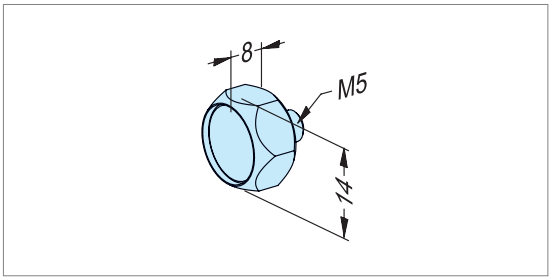

ER-119717 Repairs set ProductionChuck 210 for 030479 / 032964

Version	All wear parts for ProductionChuck 210 ER-030479 and ER-032964.
Application	Remove PC 210 chuck according to supplied instructions, replace parts.

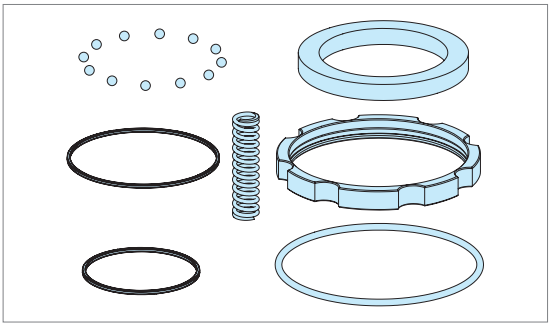

ER-126696 Repairs kit ProductionChuck 210 Combi for 030478 / 032388

Version	All wear parts for the ProductionChuck 210 Combi ER-030479 and ER-032964.
Application	Dismantle ProductionChuck 210 Combi according to instructions, replace parts.

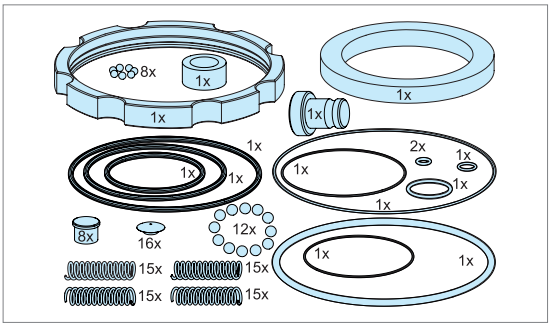

EROWA PowerChuck P

The flexible interface

EROWA PowerChucks P constitute a flexible and precise interface between machine and workpiece. The chucks can be integrated easily and quickly on a wide variety of machining centers.

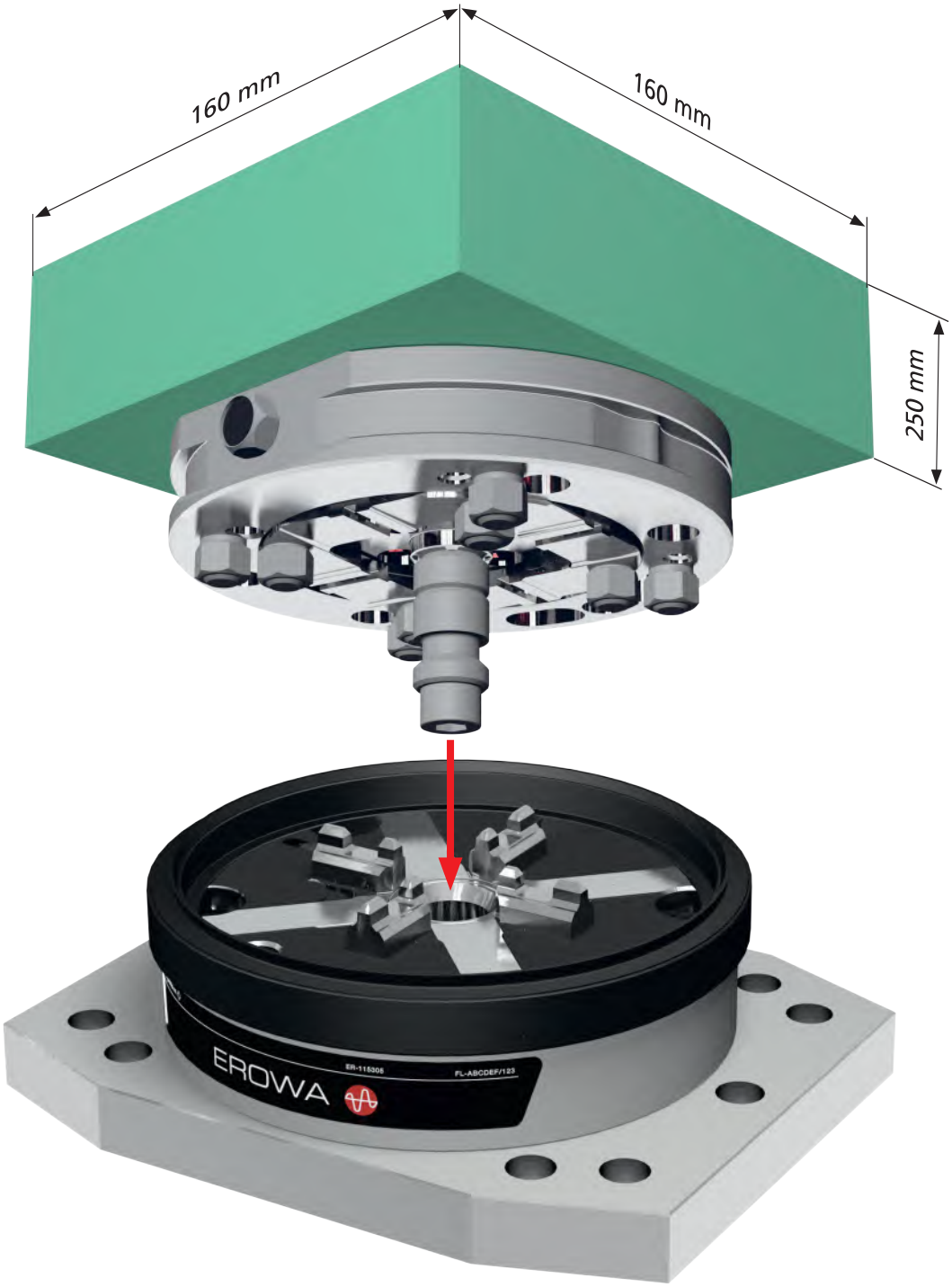

Applications

Handling

Manual / Loading facility / Robot

Function

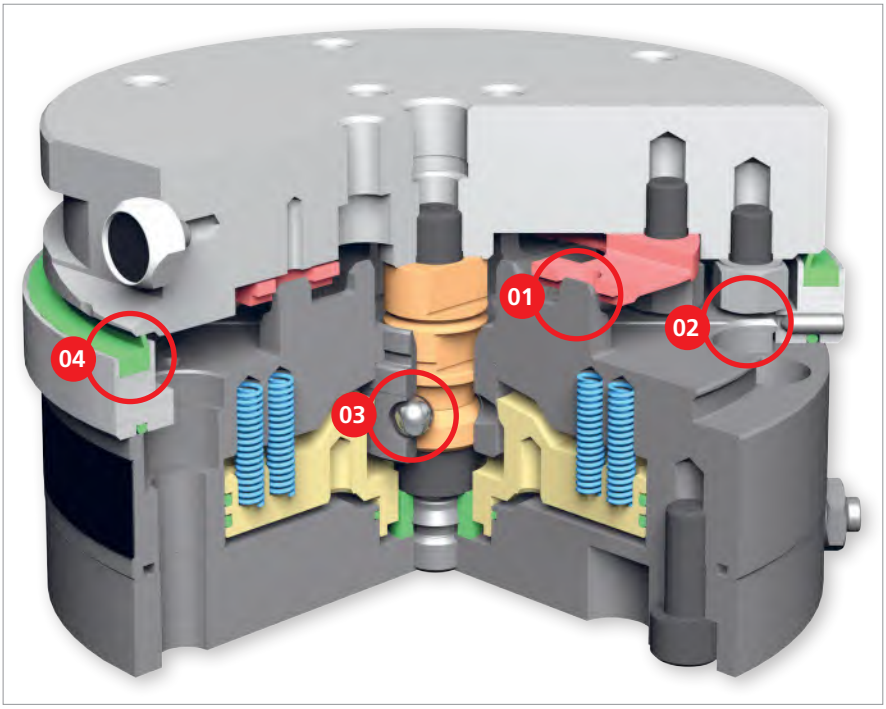

01 | Centering 3 in 1
The PowerChuck P is equipped with three different centering profiles, which means that a wide variety of EROWA workpiece carriers can be clamped with the highest degree of precision and positional orientation.

02 | Cleaning
During the clamping process the support surfaces of the supporting feet are cleaned with compressed air.

03 | Power pack
The self-locking ball-lock with the low-maintenance ceramic balls generates a clamping power of 10,000 N. The clamping power will persist even when the pressure has dropped.

04 | 100% tight
Various sealing rings prevent chips and coolant from penetrating into the chuck.

Technical data - PowerChuck P

	PowerChuck P
For pallet sizes	ITS 50, PM 85, ø 115 mm, ø 148 mm
Chuck dimensions	H = 33 mm x ø 156 mm, H = 51 mm x ø 156 mm
System height (chuck and pallet)	73 mm / 91 mm
Recommended workpiece sizes	up to 160 x 160 x 250 mm
Repeatability	< 0.002 mm
Indexing	4 x 90°
Clamping force	10,000 N
Clamping	with spring tension (clamped without pressure)
Opening pressure	min. 6 bar (pneumatic)
Operation	with control unit or compressed-air jet

EROWA PowerChuck P in operation

For milling, drilling, grinding or turning

The PowerChuck P is flexible and universally applicable, no matter whether on milling or drilling machines, on profile or surface grinding machines or on the spindles of dividing heads and lathes. Besides manual operation, the tooling system is also optimally prepared for automation.

FACTS

- High degree of clamping power
- Repeatability < 0.002 mm
- Z-support surfaces cleaned by air
- Ceramic balls
- Reliably sealed
- A wide variety of accessories
- Can be automated





The PowerChuck P palletizing system can be automated. EROWA provides a suitable handling facility for every field of application and for all technologies. Sealing rings protect the chucks and guarantee a safe automatic loading/unloading process.

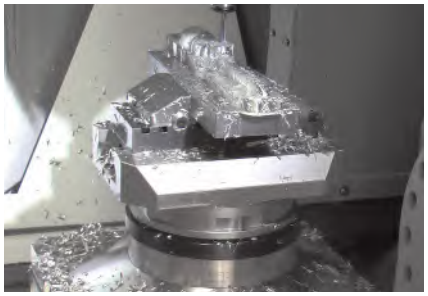

The compact design and low profile height of the tooling systems provide a great deal of space for workpiece and machining processes.



The base plate of the PowerChuck P has a variously usable mounting hole configuration, thus offering many mounting options.



Workpiece carriers can be clamped into the chuck with a repeatability of 0.002 mm within a few seconds.

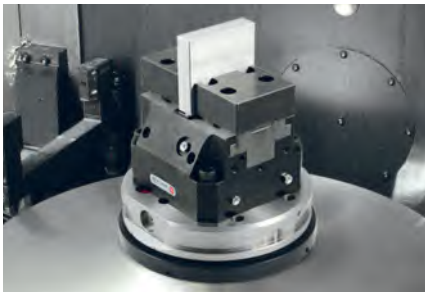

Simply practical – with the PowerChuck P model with an air duct, fixtures are pneumatically operated through the pallet and the chuck.

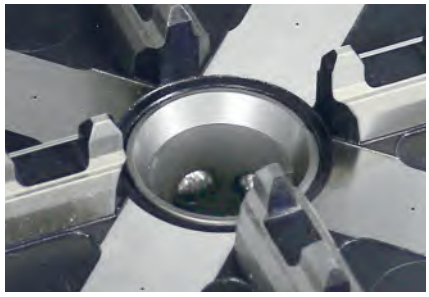

The extremely low-wear ceramic balls in the lock guarantee a constant and low-maintenance performance for an even longer period of time.



The new ø 148 pallet has an optimized center of mass for the best concentricity properties in lathe applications.

EROWA PowerChuck P

The components

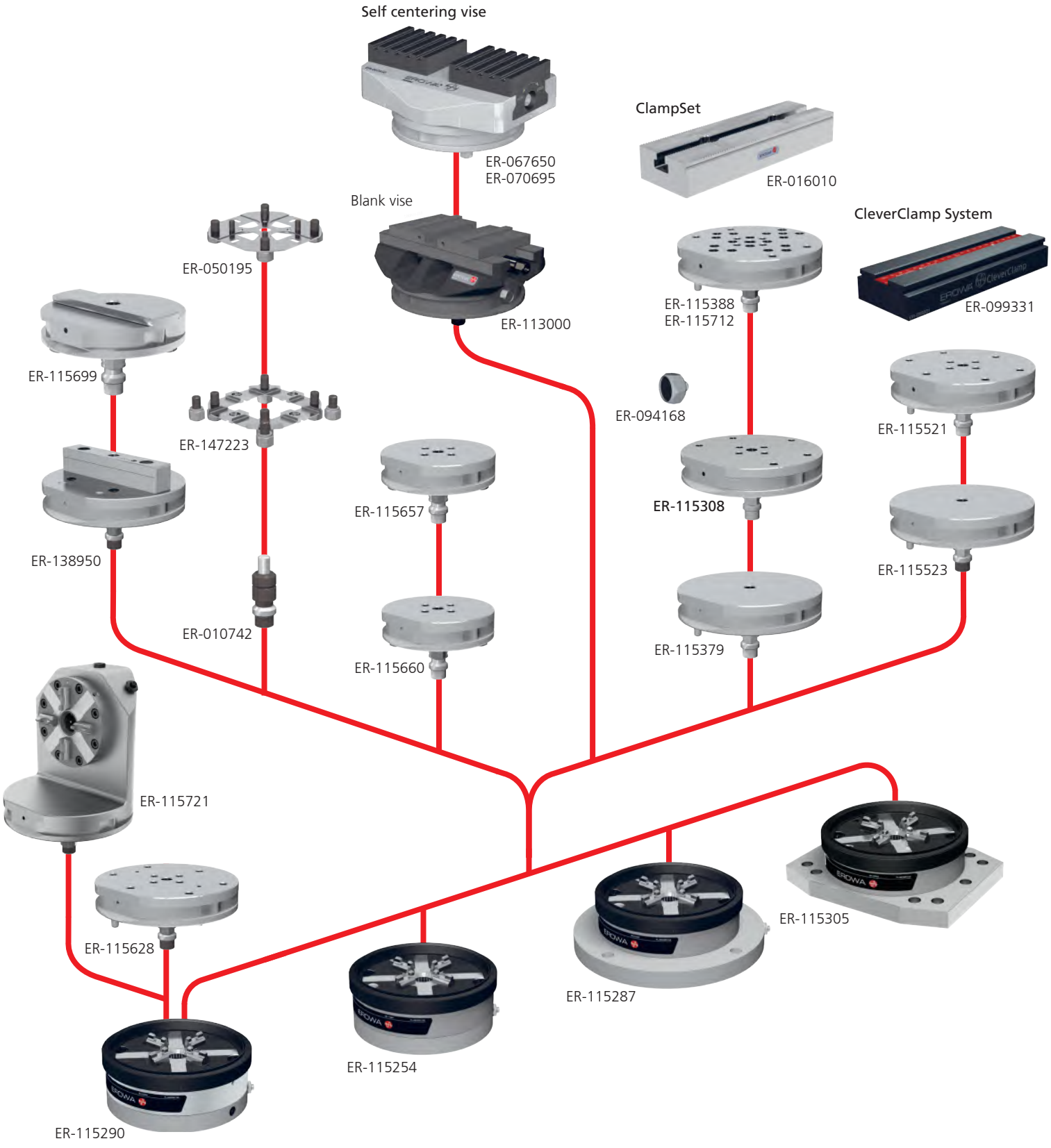

To make it easier for you to find your way about the fields of application for EROWA products, we use the following symbols in all our documents:


1. Manual operation


2. Operate with compressed air jet


3. Operate with manual valve


4. Operate with manual control unit



5. Operate with electro-pneumatic control unit


6. With central flushing clearance


7. Suited for submerged operation



8. Corrosion-resistant material



9. Suited for automatic operation


10. Handling with EROWA Robot gripper S


11. Handling with EROWA Robot gripper Combi


12. Handling with EROWA Robot gripper C



13. Handling with EROWA Robot gripper 72



14. Handling with EROWA Robot gripper 115



15. Handling with EROWA Robot gripper 148



16. Handling with EROWA Robot gripper RN PC 210


17. Handling with EROWA Robot gripper RCS


18. Handling with EROWA Robot gripper WGS-500



EROWA POWERCHUCK P

PowerChuck P	Chucks	138
PowerChuck P	Pallets	141
PowerChuck P	Measuring equipment	146
PowerChuck P	Sealing rings	147
PowerChuck P	Operation	150
PowerChuck P	Accessories	151


For chip-removing processes


For EDM sinking


For WEDM

EROWA PowerChuck P

Chucks

Technical data	PowerChuck P
Repeatability	< 0.002 mm
Pallet indexation	4 x 90°
Clamping power	10,000 N
Clamping	with spring tension (clamped without pressure)
Opening pressure	min. 6 bar (pneumatic)

ER-115800 PowerChuck P without base plate





Version	Extra flat design. Height 33 mm. Without base plate.
Connections	At the rear through the interface to be created according to instructions.
Operation	Pneumatically.

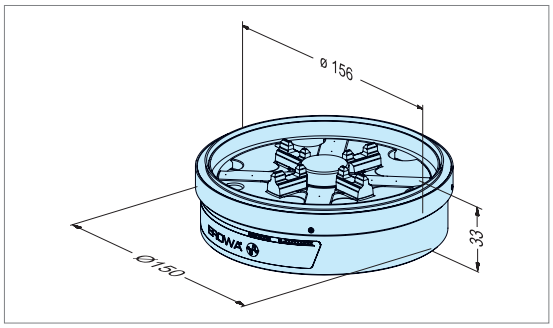

ER-115254 PowerChuck P ø 150





Version	Extra flat design. Height 51 mm. Base plate ø150 mm.
Connections	Laterally or at the rear with two tubes.
Operation	With air gun: laterally. With control unit: through two connections laterally or at the rear.

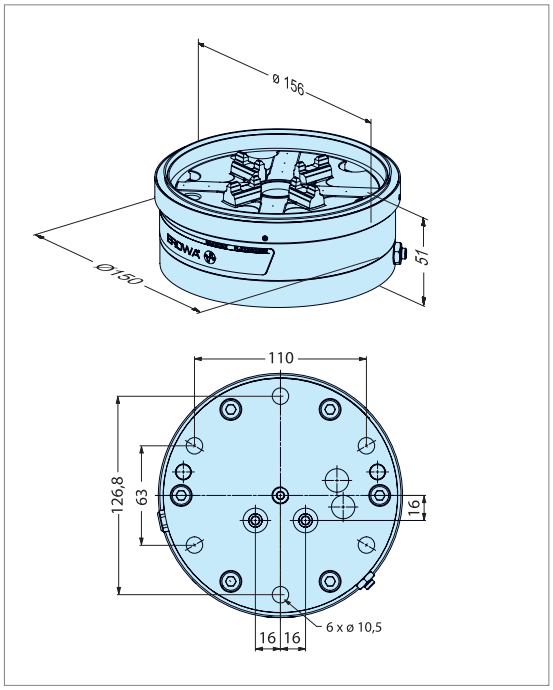

ER-136056 PowerChuck P without base plate for mounting in machine table

Version	Extra flat design. Height 33 mm. Without base plate. Casing without lateral label.
Connections	At the rear through the interface according to instructions.
Operation	Pneumatically.
Applications	To be fitted to the machine if the outside diameter of the chuck has to be sealed.

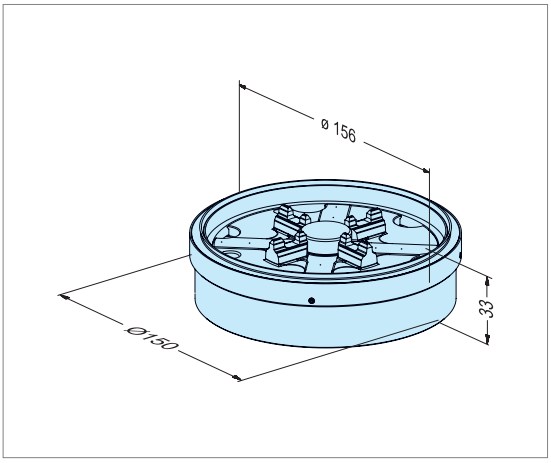

ER-115287 PowerChuck P ø 204

Version	Extra flat design. Height 51mm. Base plate ø204 mm.
Connections	Laterally or at the rear with two tubes.
Operation	With air gun: laterally. With control unit: through the two connections laterally or at the rear.

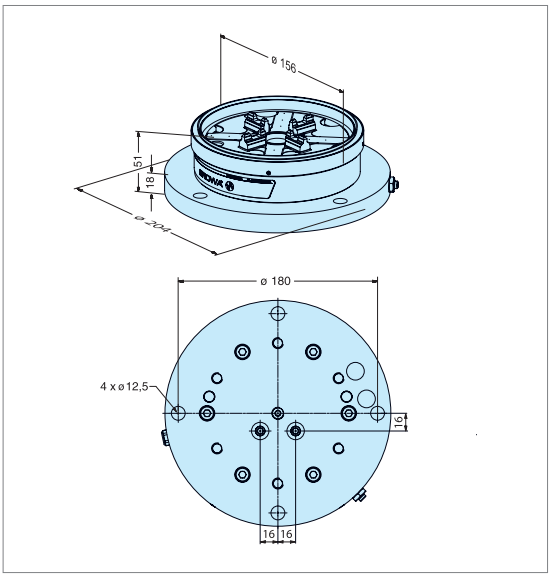

ER-115305 PowerChuck P 158 x 228

Version	Extra flat design. Height 51mm. Base plate 158x228 mm.
Connections	Laterally or at the rear with two tubes.
Operation	With air gun: laterally. With control unit: through the two connections laterally or at the rear.

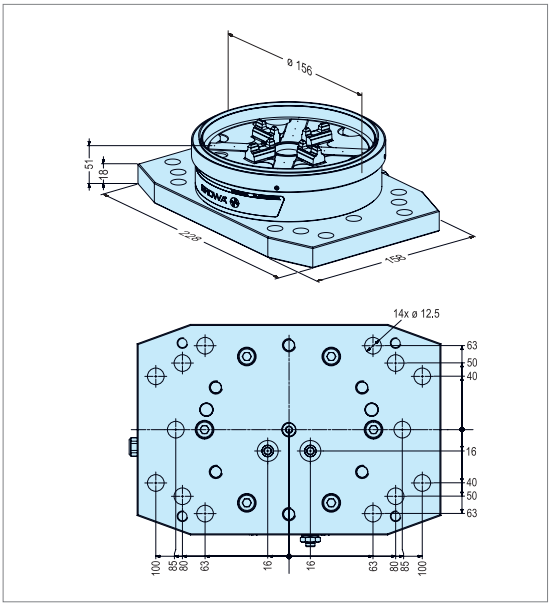

EROWA PowerChuck P

Chucks

ER-115290	PowerChuck P ø 150 with 2 air ducts



Version	PowerChuck P with 2 air ducts. Extra flat design. Height 51 mm. Base plate ø150 mm.
Connections	Laterally or at the rear with four tubes.
Operation	With air gun: laterally. With control unit: through the two connections laterally or at the rear.
Please note	The air ducts must only be used for compressed air and vacuum.

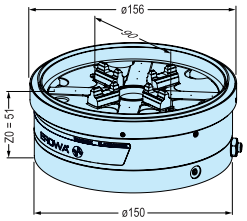

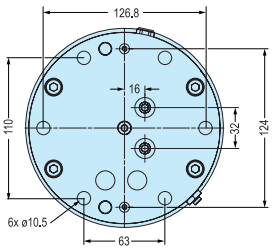

EROWA PowerChuck P

Pallets

ER-115657 Pallet ø 115 MS



Version	Steel, rust-resistant. With centering plate 100 (punched).
Application	To accommodate electrodes, workpieces and fixtures for chip-cutting production.
Fitting a blank	Through the pallet with M8 bolts or through the blank with M10 bolts.

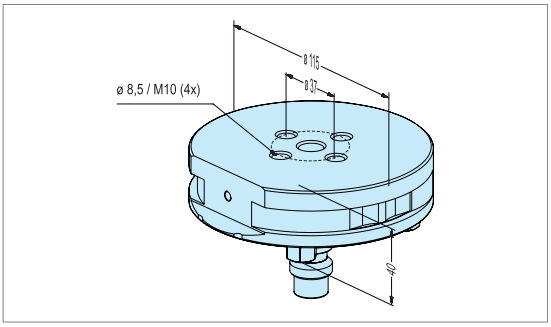

ER-115660 Pallet ø 115 G



Version	Steel, rust-resistant. With centering plate G (ground).
Application	To accommodate electrodes, workpieces and fixtures for chip-cutting production.
Fitting a blank	Through the pallet with M8 bolts or through the blank with M10 bolts.

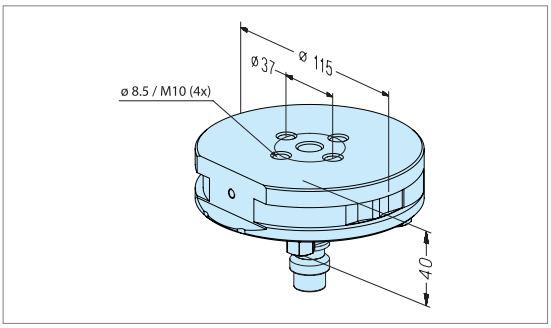

ER-115379 Pallet ø 148 G blank



Version	Steel, rust-resistant. Without mounting hole pattern. With centering plate G (ground). With optimized center of mass.
Application	To accommodate electrodes, workpieces and fixtures for chip-cutting production.
Fitting a blank	In any suitable manner.

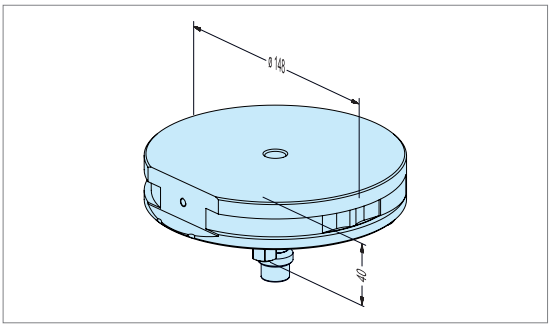

ER-133250 Pallet ø 148 G blank ALU



Version	Aluminum pallet without mounting hole pattern. With centering plate G (ground). With optimized center of mass.
Application	To accommodate workpieces and fixtures for chipcutting production.
Fitting a blank	In any suitable manner.

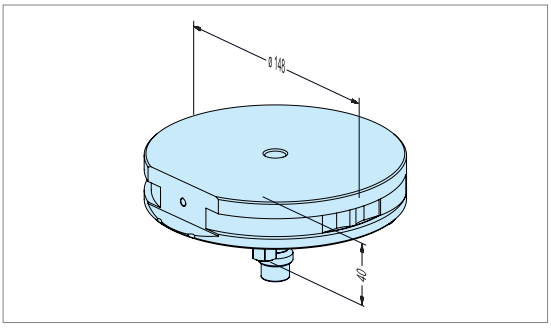

EROWA PowerChuck P

Pallets

ER-115308 Pallet ø 148 G

Version	Steel, rust-resistant. With centering plate G (ground). With optimized center of mass.
Application	To accommodate electrodes, workpieces and fixtures for chip-cutting production.
Fitting a blank	Through the pallet with M8 bolts or through the blank with M10 bolts.

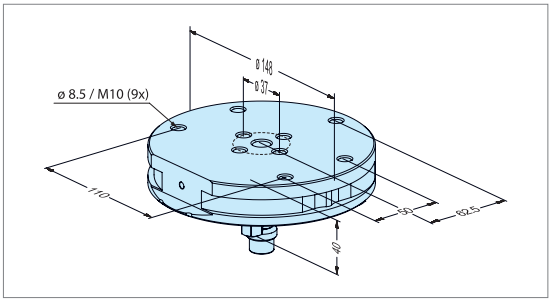

ER-115388 Pallet ø 148 G R25

Version	Steel pallet with hole pattern 25, ø10F7 and M10 thread. With centering plate G (ground). With optimized center of mass.
Application	To accommodate workpieces and electrodes. Construction of fixtures and ClampSet Base 220.
Fitting a blank	Through the pallet with M8 bolts or through the blank with M10 bolts.

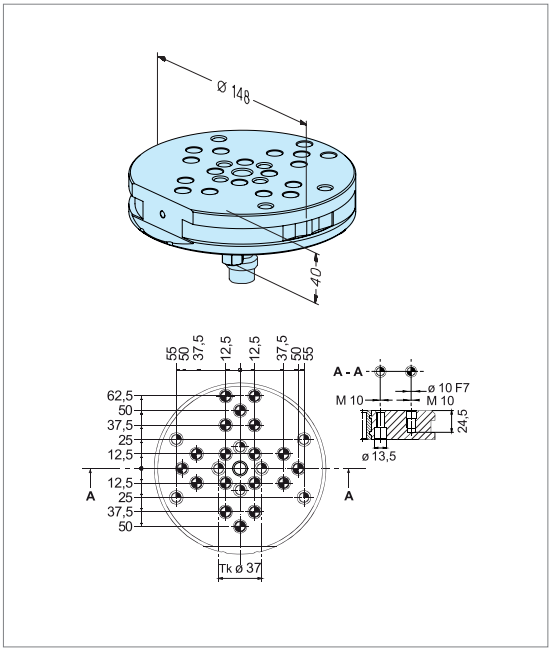

ER-115712 Pallet ø 148 G R25 ALU

Version	Aluminum pallet with hole pattern 25, ø10F7, M10 thread. With centering plate G (ground). With optimized center of mass.
Application	To accommodate workpieces and electrodes. Construction of fixtures and ClampSet Base 220.
Fitting a blank	Through the pallet with M8 bolts or through the blank with M10 bolts.

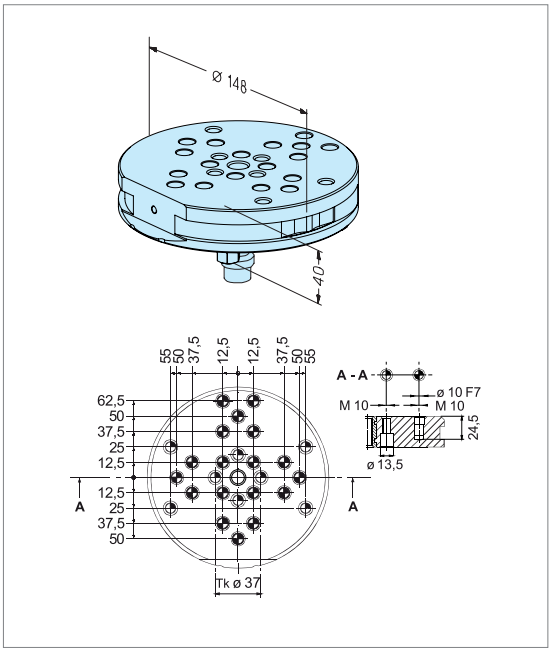

ER-115523 Pallet ø 148 P blank



Version	Steel, rust-resistant. Without mounting hole pattern. Centering integrated in the pallet. With optimized center of mass.
Application	To accommodate workpiece and fixtures for chip-cutting production.
Fitting a blank	In any suitable manner.
Please note	Compatible with EROWA ProductionChuck 210 Combi.

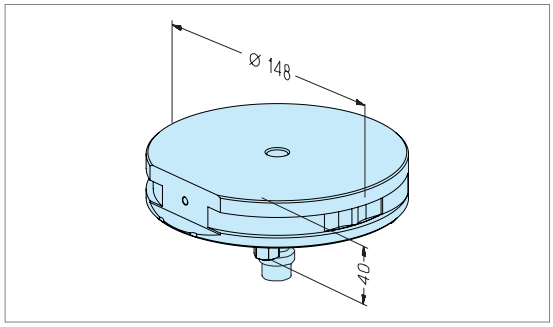

ER-115521 Pallet ø 148 P



Version	Steel, rust-resistant. Centering integrated in the pallet. With optimized center of mass.
Application	To accommodate workpieces and fixtures for chip-cutting production.
Fitting a blank	Through the pallet with M8 bolts or through the blank with M10 bolts.
Please note	Compatible with EROWA ProductionChuck 210 Combi.

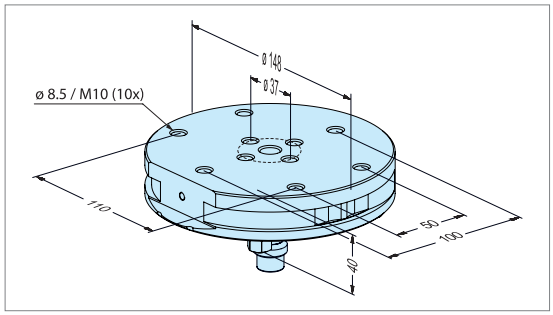

ER-115628 Pallet ø 148 P with 2 air ducts



Version	Steel, rust-resistant. With two air ducts. Centering integrated in the pallet. With optimized center of mass.
Application	For use on the EROWA PowerChuck P with two air ducts. To accommodate pneumatically operated tooling systems and fixtures.
Fitting a blank	Through the pallet with M8 bolts or through the blank with M10 bolts.

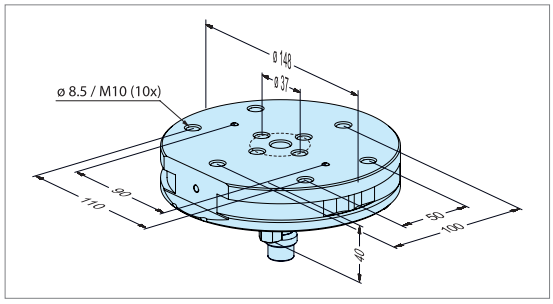

ER-115721 Angle pallet ø 148 P with ITS Chuck 100 P

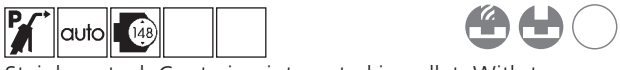

Version	Stainless steel. Centering integrated in pallet. With two nipples (ER-087788) for the air duct.
Clamping power	ITS chuck 100 P: 5,000N
Connections	On the side and at the rear with two lines.
Operation	With control unit or with compressed-air pistol.
Application	Chuck adaptation with a 90° angle. Ideal with the PowerChuck P ø150 with 2 air ducts (ER-115290).
Please note	To accommodate electrode holders and ø115, 148, PM56, PM60 and PM85 Precise pallets.

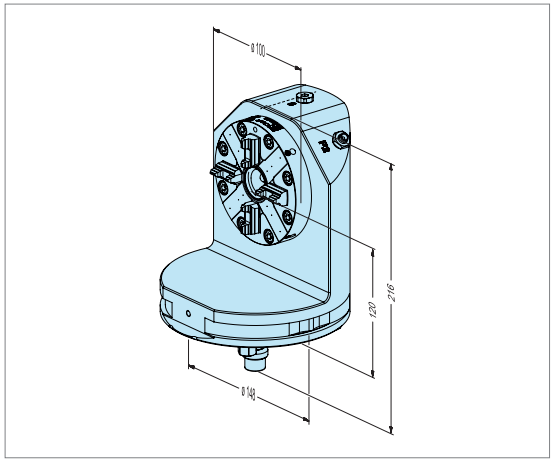

EROWA PowerChuck P

Pallets

ER-090744	Magnetic clamping plate Neospark 250 x 150 x 46

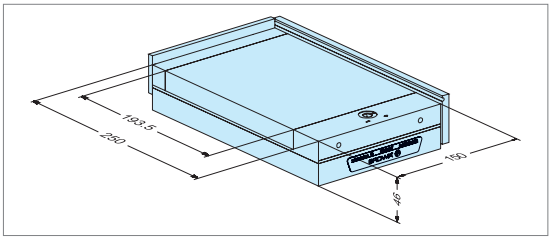

Version	Magnetic clamping plate made of steel, with two lateral stop bars. Clamping power of the magnet: 100N/cm2. Prepared with 4xM8 boreholes to be fitted to pallet ø148.
Application	Clamping workpieces magnetically for surface and profile grinding, EDM and high-frequency milling. Recommended minimum workpiece size: 4x4xmm.

ER-022250	Adapter pallet ITS 50 / ø 148

INOX auto 148

Version	ITS system size 100. Lock with central M10 locking bolt.
Application	To accommodate ITS Electrode holders system 50. Lock with central M10 locking bolt. For automatic handling.

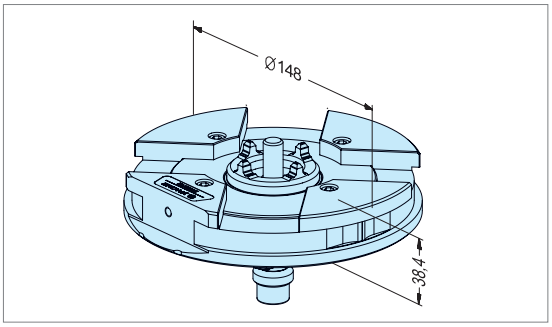

ER-050195	Centering plate 100 M8 1 unit
ER-011599	Centering plate 100 M8 10 pieces

INOX

Version	Corrosion-resistant, including 4 supporting feet M8 and 4 x M5 screws per plate.
Application	Workpieces and electrodes.
Mounting	Mounted directly on plane surface of blank.

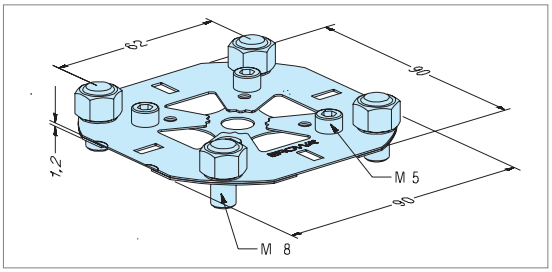

ER-147223	Centering plate G, 1 pieces with supporting feet 10.2 mm
ER-153058	Centering plate G, 5 pieces with supporting feet 10.2 mm

INOX

Version	Centering plate G (ground), rust-resistant, including 8 supporting feet SW13, height 10.2 mm.
Application	For workpieces, fixtures and gauges in chip-cutting production.
Please note	Can also be used to repair new pallet types ø 148 G, for instance ER-115308, ER-115379, ER-115388, etc.
To fit a blank	According to the fitting instructions supplied.

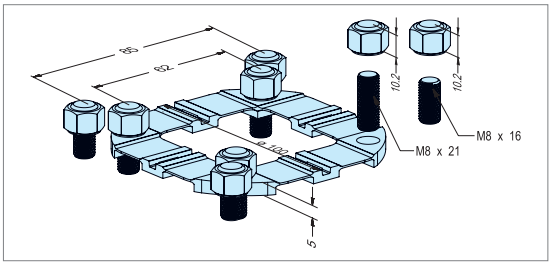

ER-068585 Manual 3-jaw concentric chuck ø 125 mm on pallet ø 148 G

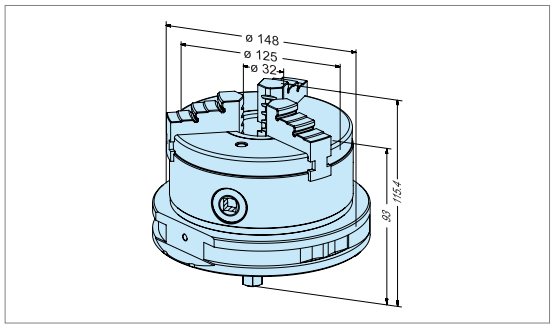

Version	Manual 3-jaw concentric chuck ø 125 mm. Central clamping range 3-53 mm. Body made of cast metal. High degree of concentricity according to DIN 6386. Fitted to pallet ø 148 G. Includes 3 hardened drilling jaws (stepped on the outside), 3 hardened turning jaws (stepped on the inside) 1 spanner.
Note	Max. speed 4,000 min-¹.
Application	In combination with EROWA chucks on lathes, indexing tables, dividing heads, etc.
Spare parts	Block jaws, soft, for 3-jaw chuck, set of 3, size 125 mm.

ER-068586 Manual 4-jaw concentric chuck ø 125 mm on pallet ø 148 G

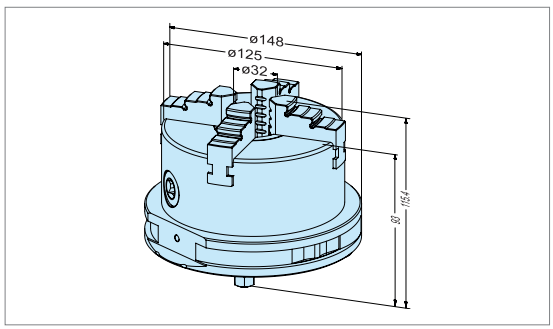

Version	Manual 4-jaw concentric chuck ø 125 mm. Central clamping range 3-53 mm. Body made of cast metal. High degree of concentricity according to DIN 6386. Fitted to pallet ø 148 G. Includes 4 hardened drilling jaws (stepped on the outside), 4 hardened turning jaws (stepped on the inside), 1 wrench.
Note	Max. speed 4,000 min-¹.
Application	In combination with EROWA chucks on lathes, indexing tables, dividing heads, etc.
Spare parts	Block jaws, soft, for 4-jaw chuck, set of 4, size 125 mm.

ER-068697 Manual 3-jaw concentric chuck ø 140 mm on pallet ø 148 G

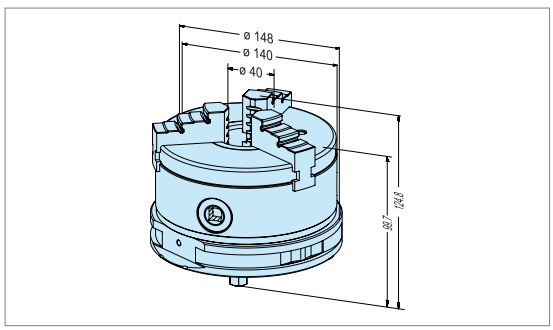

Version	Manually operated three-jaw chuck ø140 mm. Central clamping range 3-53 mm. Body made of steel. High concentric accuracy according to DIN 6386. Fitted to pallet ø 148 G. Including 3 hardened drilling jaws (outward stepped), 3 hardened turning jaws (inward stepped) and 1 wrench.
Please note	Max. speed 5,000 min-¹.
Application	In combination with EROWA chucks on lathes, round tables, dividing heads, etc.
Spare parts	Block jaws, soft, for three-jaw chuck, set of 3, size 140 mm.

EROWA PowerChuck P

Measuring equipment

ER-115699 Alignment pallet ø 115 MS



Version: Pallet ø 115 mm, alignment length 110mm, center borehole ø 12 mm.

Application: Alignment of radial, axial and angular position of ITS chucks, PowerChuck P and PC 210 Combi chucks.

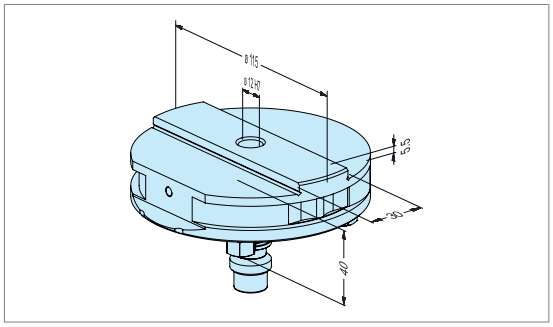

ER-138950 Alignment pallet ø 148 P



Version: Pallet P ø 148 with ground alignment rail and four Z-measuring surfaces, including chucking spigot F/M Production.

Application: Alignment of the angle position and determination of the Z-values of ITS Chucks 100 P, PowerChucks P and PC 210 Combi chucks.

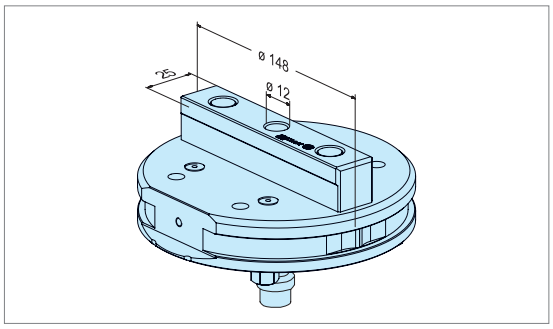

EROWA PowerChuck P

Sealing rings

ER-115722 Sealing ring PowerChuck P / ø 148 manual

Version Aluminum, anodized.
Application Prevents the penetration of dirt and chips into the Power-Chuck P in combination with EROWA pallets ø148.

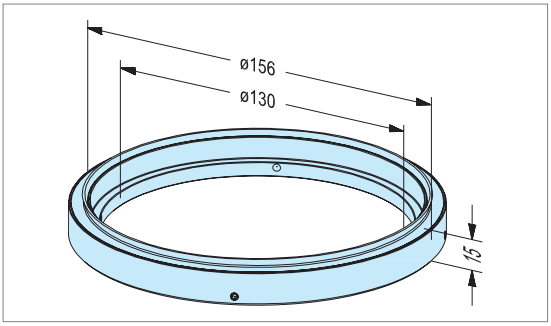

ER-124305 Sealing ring PowerChuck P / ø 148 automatically

INOX auto 148

Version Rust-resistant steel.
Application Prevents penetration of chips and dirt into the Power-Chuck P by application of EROWA ITS pallets ø 148. With venting.

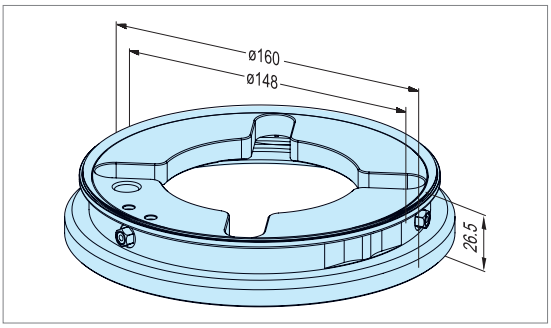

ER-016142 Sealing ring holder PC P / ø 115 manual

Version Aluminum anodized.
Application Prevents penetration of chips and dirt into the Power-Chuck P by application of EROWA ITS pallets ø 115.

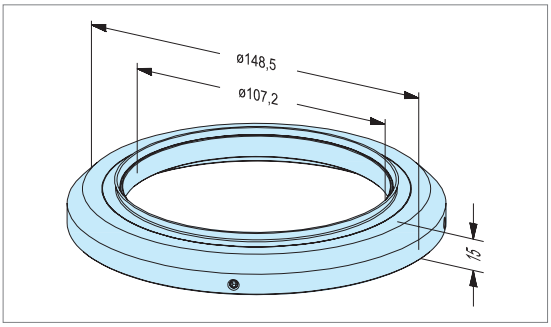

ER-124370 Sealing ring PowerChuck P / ø115 automatically

INOX auto 148

Version Rust-resistant steel.
Application Prevents penetration of chips and dirt into the Power-Chuck P by application of EROWA ITS pallets ø 115. With venting.

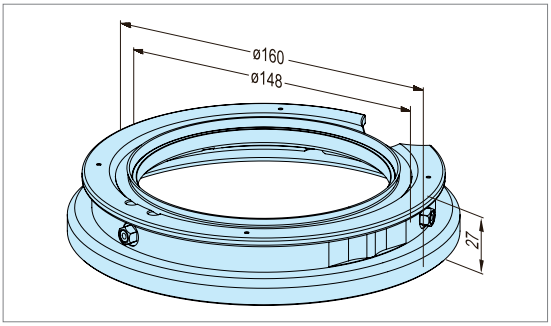

EROWA PowerChuck P

Sealing rings

ER-038918 Sealing ring PC P / PM 85 manual

Version Aluminum anodized.
Application Prevents penetration of chips and dirt into the PowerChuck P by application of EROWA pallets PM85.

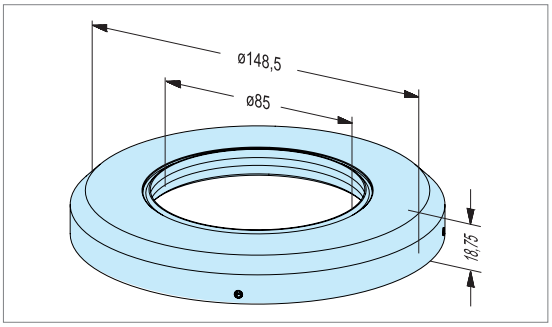

ER-055755 Sealing ring PC P / PM 85 automatic

INOX auto 148

Version Rust-resistant steel.
Application Prevents penetration of chips and dirt into the PowerChuck P by application of EROWA pallets PM85.

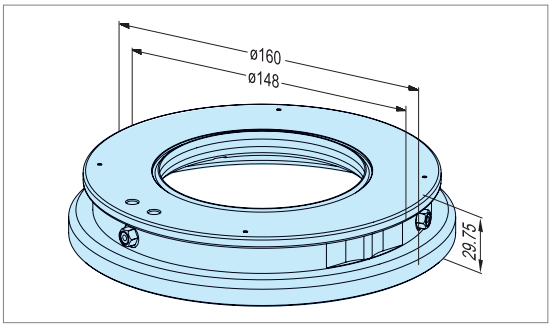

ER-035365 Sealing ring PC P / ø 72 manual

Version Aluminum anodized.
Application Prevents penetration of chips and dirt into the PowerChuck P by application of EROWA Holders ø 72.

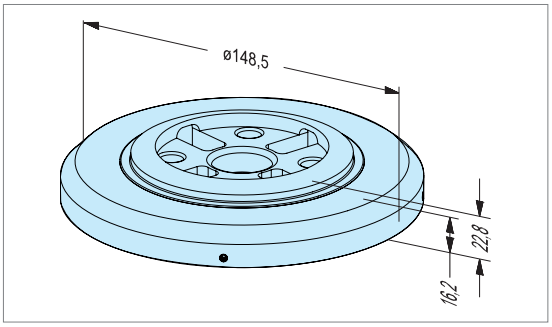

ER-124304 PowerChuck P sealing ring / ø 72 automatically

INOX auto 148

Version Rust-resistant steel
Application Prevents penetration of chips and dirt into the PowerChuck P by application of EROWA Holders 72. With venting.

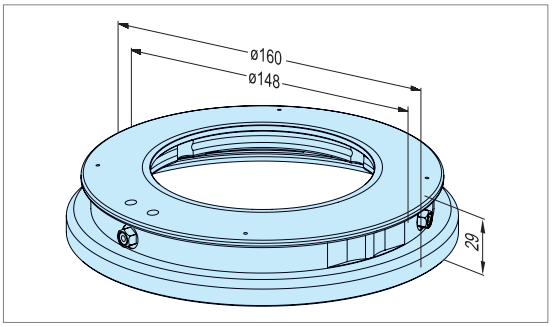

ER-092203 Sealing ring PC P / ITS 50 C manual

Version Aluminum anodized.
Application Prevents penetration of chips and dirt into the Power-Chuck P when clamping EROWA electrode holders C.

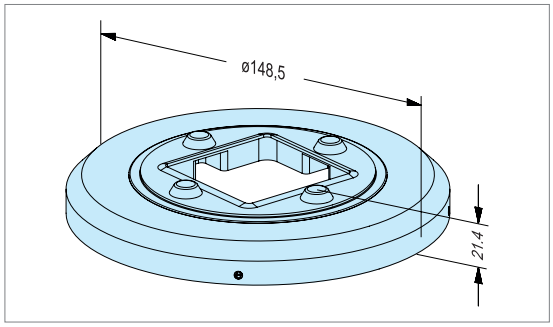

ER-124371 Sealing ring PowerChuck P / ITS 50 C automatically

INOX auto 148

Version Rust-resistant steel
Application Prevents penetration of chips and dirt into the Power-Chuck P during machining with EROWA electrode holders C. With venting.

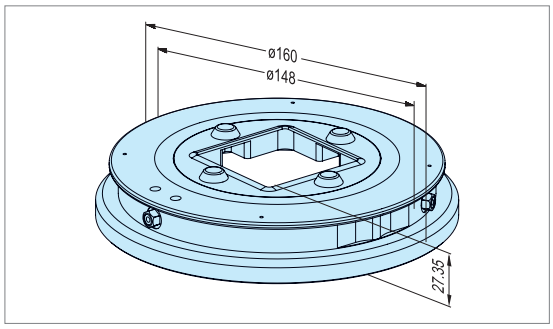

ER-008972 Cover for PowerChuck P

Version Aluminum. Without centering plate and supports.
Application Protects the PowerChuck P from chips and cooling water when not in use.

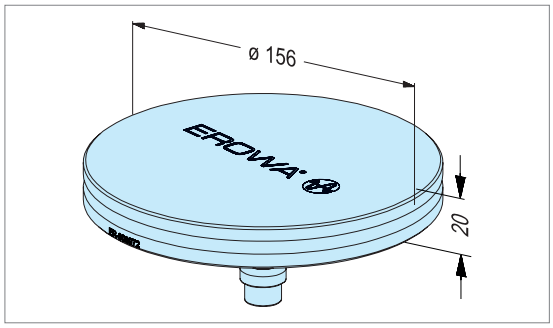

ER-055763 Cover to PowerChuck P

INOX auto 148

Version Rust-resistant steel.
Application Prevents penetration of chips and dirt into the PowerChuck P. For automatic handling.

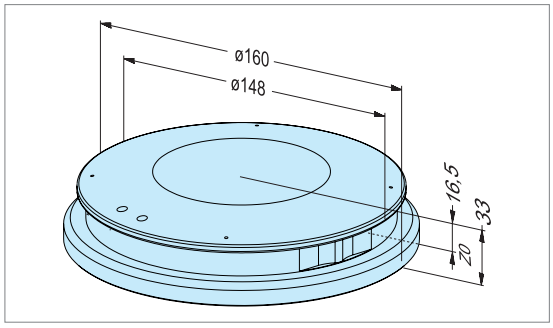

EROWA PowerChuck P

Operation

ER-001846 Air jet

Version	Plastic, smooth regulation of air flow, connection 1/4'', inside thread.
Application	Operation of manual chucks.
Note	Not suitable for operating MTS+ and MTS81.
Option	Volume and pressure reduction to air jet (ER-087668). Pressure build up is reduced if Air Jet is not pushed against an air valve.

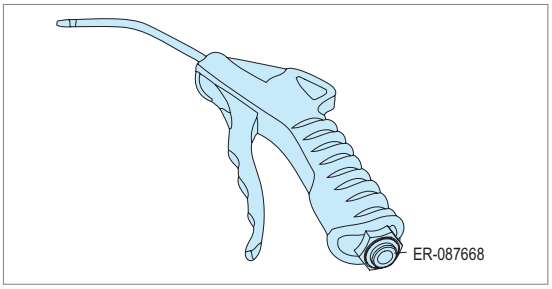

ER-157411 Control box 2-fold

Version	Manual control box for a maximum of 2 chucks. To control the opening / reclamping / cleaning functions. Pressure adjustable. Includes a set of tubes.
Connections	1 input (P IN) and 4 outputs (P2 Open / P2.2 Open P3 Clean / P4 Reclamp).
Application	To operate chuck types ITS, ITS Compact, CombiChuck, PowerChuck P, VPC, UPC or PM Tooling.

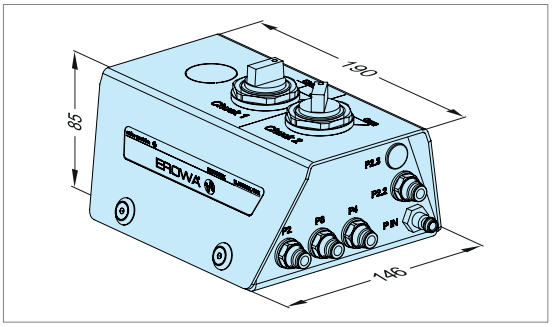

ER-070445 Control unit with monitoring

Version	Electropneumatic valve. Outputs for chucks: opening/cleaning/reclamping. 24 V, incl. mounting accessories and 3 m connection hose.
Application	Operation and monitoring of machine-integrated chucks, for instance through the CNC M-function.

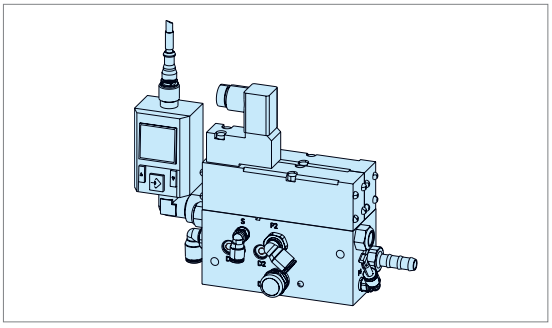

EROWA PowerChuck P

Accessories

ER-094168 EWIS™ rapid chip with holder SW14 Length 8mm (grey)

Version	Sleeve fitting with built-in data carrier. EWIS Rapid chip: read only.
Application	In any EROWA electrode holder and pallet which has been prepared for it.

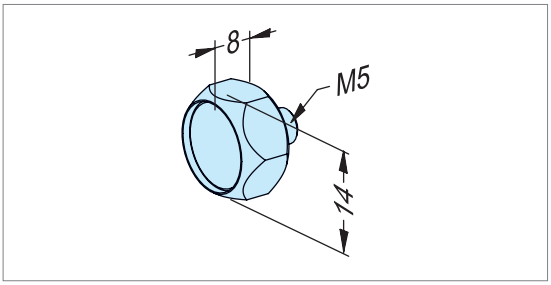

ER-046221 Reference bolt ø 7.7, M10x30 10 pieces

Version	Set of 10 bolts. Bolts have been reworked.
Application	On pallets ø 148 mm: for positional orientation in PowerChuck P and Robot magazines.

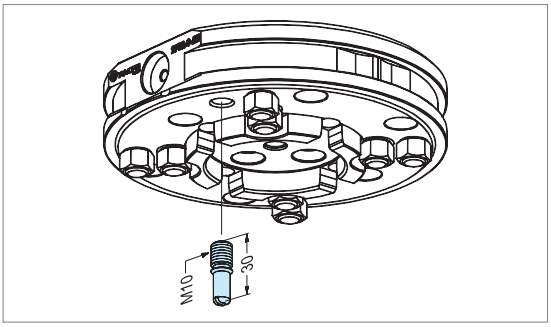

ER-115749 Repair kit PowerChuck P

Version	All the wearing parts for the PowerChuck P.
Application	Dismantle chuck according to enclosed instructions, replace parts.

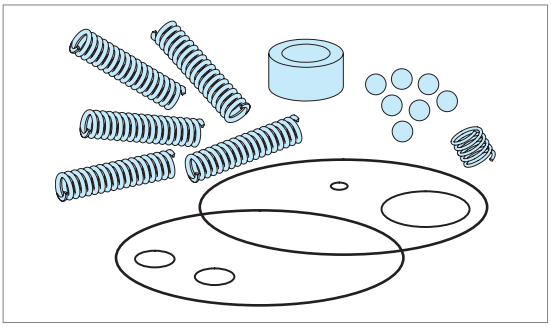

ER-115844 Repair kit PowerChuck P with locking ring

Version	All the wearing parts, including locking ring, for the PowerChuck P.
Application	Dismantle chuck according to enclosed instructions, replace parts.

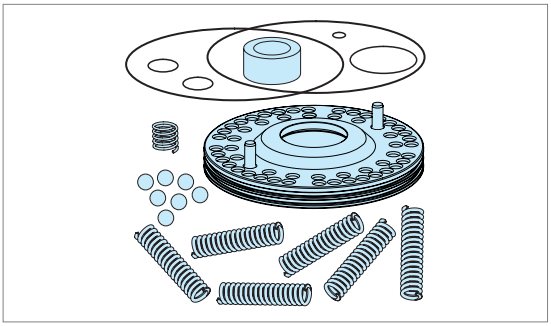

EROWA VPC

Process-reliable automation of vises

The Vise Power Clamp system delivers what it promises: powerful, precise, and process-reliable clamping of vises, fixtures and workpieces with pitch dimensions 52 & 96 mm.
The two VPC chuck sizes with the matching VPC clamping spigots form the core. The universal application possibilities open up the greatest flexibility in workpiece production.

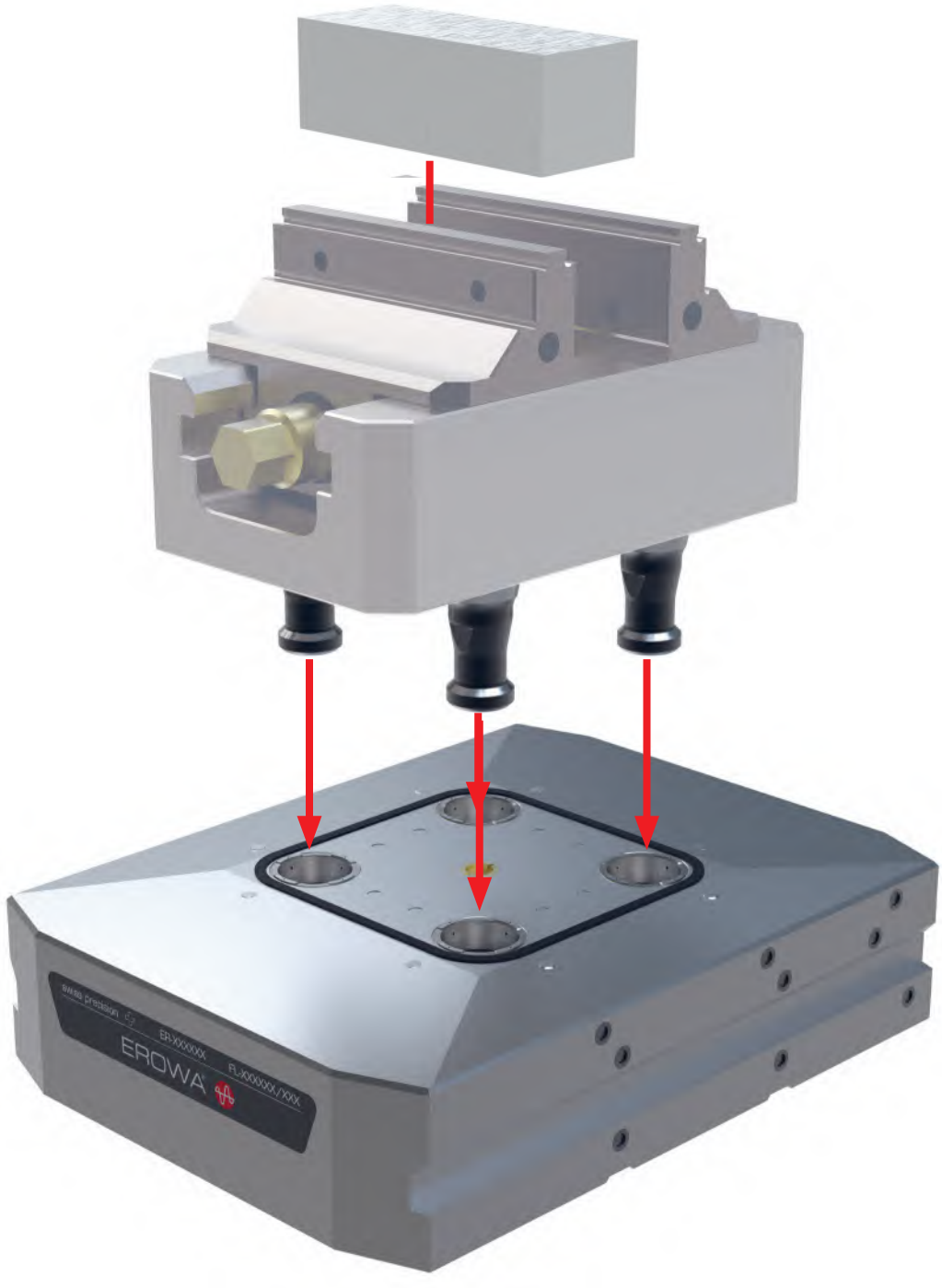

Applications

Handling

Manual / Loading facility / Robot

Function

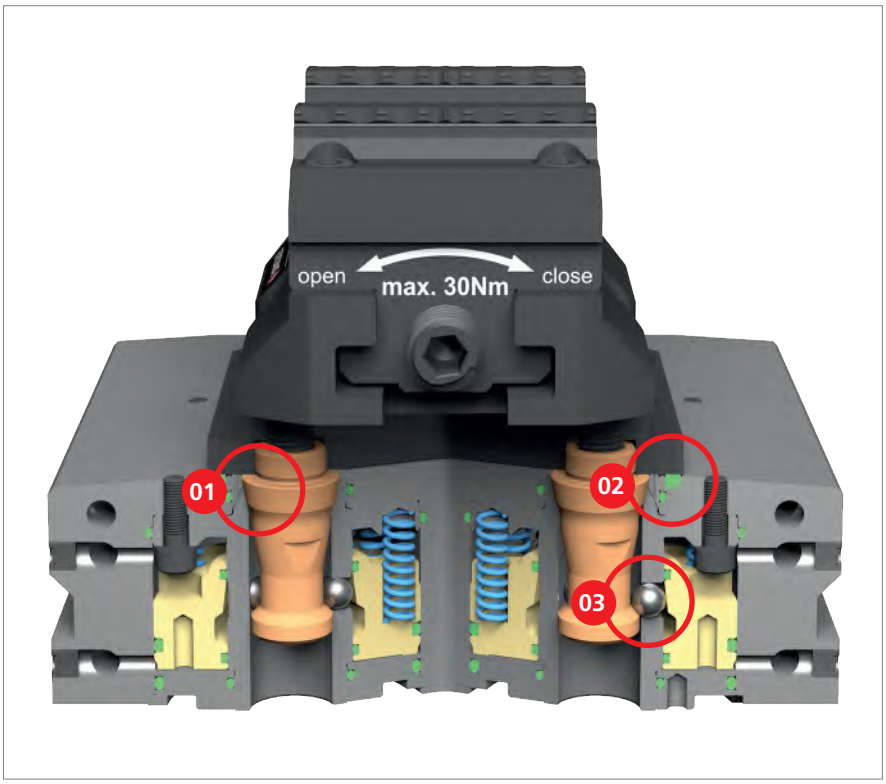

01 | **Precise**
Play-free, conical centering.
Repeatability: < 0.003 mm.
Easy insertion of the pallets without any jamming.

02 | **100% tight**
Various sealing rings prevent chips and coolant from penetrating into the chuck.

03 | **Power pack**
The self-locking ball-lock with the low-maintenance ceramic balls generates a clamping power of 18,000 N. The clamping power will persist even when the pressure has dropped.

VPC

Technical data - VPC Chuck

	VPC chuck
Repeatability with chucking spigot	< 0,003 mm
Indexing	4 x 90°
Clamping power (with reclamping)	18'000 N
Clamping	with spring tension (clamped without pressure)
Opening with dry compressed air	min. 6 bar
Number of air ducts:	min. 2 (opening & reclamping)
	Optional: + 1 (for cleaning / presence control)

EROWA VPC in use

Integrate and profit

All vises, fixtures, and workpieces available on the market with prepared pitch dimensions 52 and 96 mm are quickly and easily accommodated in the EROWA VPC tooling system.This way they are integrated into the highly flexible EROWA manufacturing philosophy.



THE FACTS

- Accommodates all vises with pitch 52/96 mm
- Direct clamping of fixtures and workpieces
- Maximizing manufacturing flexibility through the use of adapter pallets
- Manual or automated handling
- Process-safe work-holding for trouble-free automation



The VPC clamping system consists of two system sizes:
- VPC 52 chuck & clamping spigot for pitch 52 mm.
- VPC 96 chuck & clamping spigot for pitch 96 mm.



The proven, functional and sophisticated clamping technology of the VPC chucks includes integrated Z-support cleaning, status monitoring, and a circumferential seal.

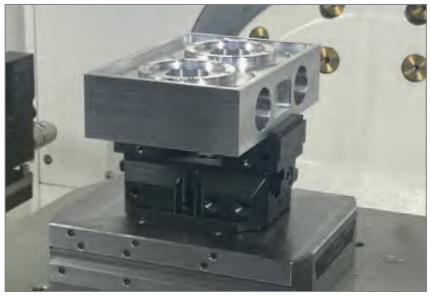

With a clamping force of 18 kN (reclamped), the workpiece clamps or workpieces are clamped powerfully and precisely in the VPC chuck. The workpiece carrier is changed in seconds with a repetition accuracy <0.003 mm.



The preparation of workpiece clamps, fixtures and workpieces is simple: Screw in VPC clamping spigot 52 or 96 and tighten - done!



The VPC chucking spigots are made of high-quality and hardened steel and offer a long service life.
The ground functional surfaces ensure optimum running-in behavior into the VPC chuck. This ensures process-reliable clamping and trouble-free automation.



By adapting different system sizes, flexibility is significantly maximized. With adapter pallets, the VPC clamping system can be flexibly integrated into the EROWA UPC (Fig.) and MTS system.

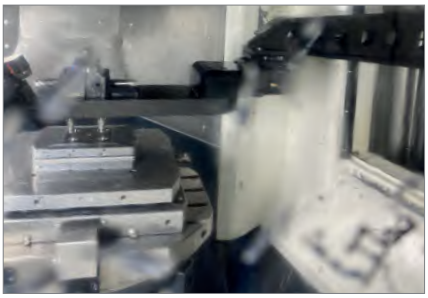

Automated loading significantly increases the productive hours on your processing machine. EROWA offers the right automation option depending on your needs.
We will be happy to advise you on your individual VPC automation solution!

EROWA VPC

The components

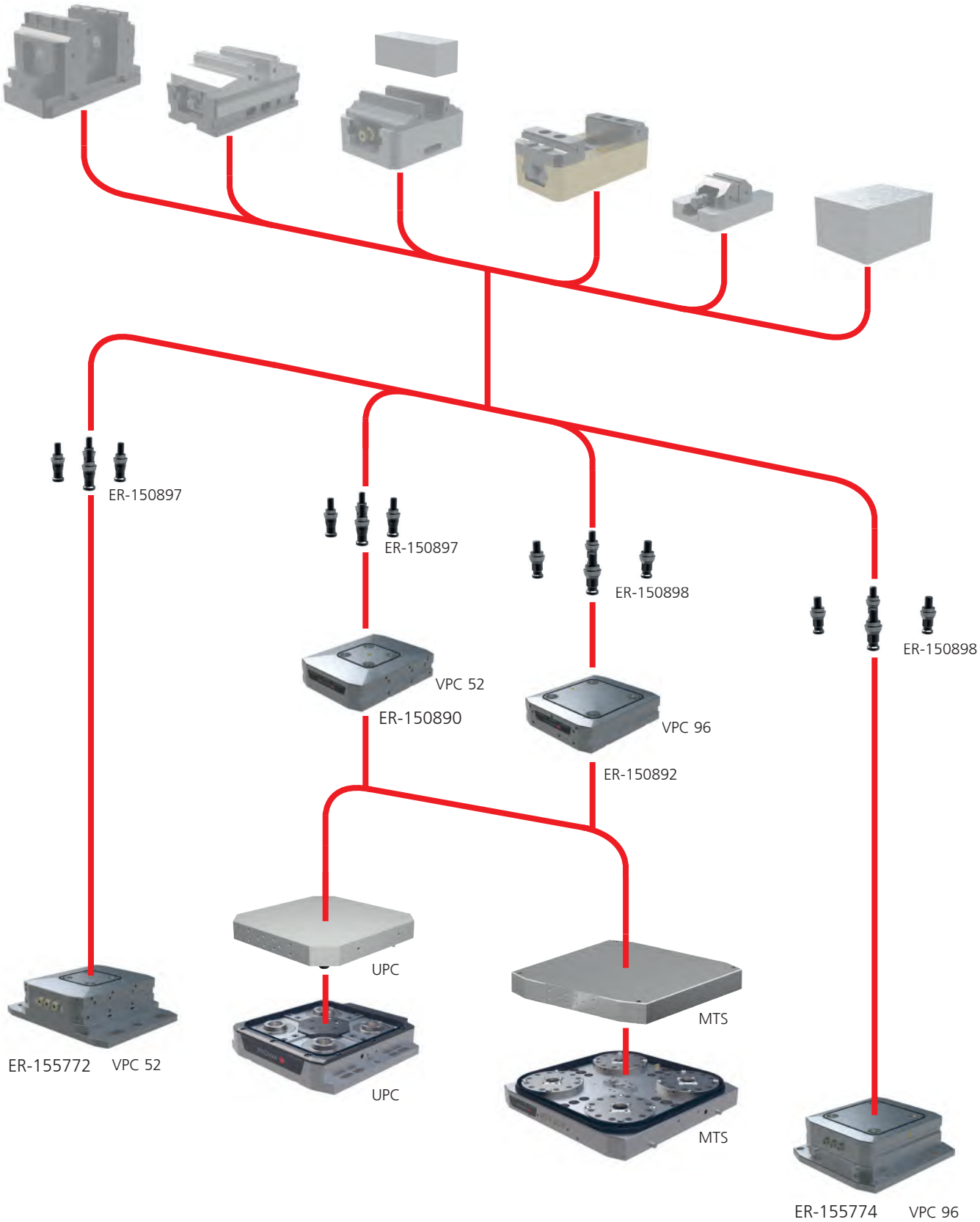

To make it easier for you to find your way about the fields of application for EROWA products, we use the following symbols in all our documents:

1. Manual operation
2. Operate with compressed air jet
3. Operate with manual valve
4. Operate with manual control unit
5. Operate with electro-pneumatic control unit
6. With central flushing clearance
7. Suited for submerged operation
8. Corrosion-resistant material
9. Suited for automatic operation
10. Handling with EROWA Robot gripper S
11. Handling with EROWA Robot gripper Combi
12. Handling with EROWA Robot gripper C
13. Handling with EROWA Robot gripper 72
14. Handling with EROWA Robot gripper 115
15. Handling with EROWA Robot gripper 148
16. Handling with EROWA Robot gripper RN PC 210
17. Handling with EROWA Robot gripper RCS
18. Handling with EROWA Robot gripper WGS-500

EROWA VPC

VPC	Chucks	158
VPC	Chucking spigots	159
VPC	Auxiliary equipment	160

For chip-removing processes

For EDM sinking

For WEDM

EROWA VPC

Chucks

Technical data	VPC chuck
Repeatability with chucking spigot	< 0,003 mm
Indexing	4 x 90°
Clamping power (with reclamping)	18'000 N
Clamping	with spring tension (clamped without pressure)
Opening with dry compressed air	min. 6 bar
Number of air ducts:	min. 2 (opening & reclamping) Optional: + 1 (for cleaning / presence control)

ER-150890 VPC Chuck 52 without base plate

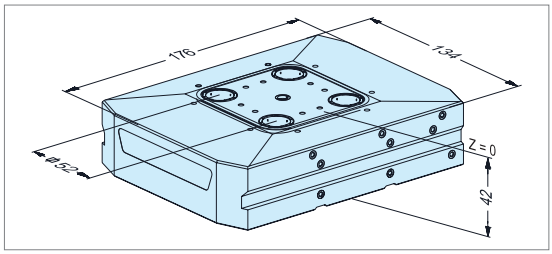

Version	Automatable chuck with a 52 mm pitch. Compact design of L 176 x W 134 x H 42 mm. Without base plate.
Connections	Laterally and from below: to open, reclamp and clean / presence check.
Application	To accommodate workpiece holders, pallets and fixtures which have been prepared with a pitch of 52mm and VPC chucking spigots 52.
To be fitted	Directly onto the machine table, base plates and pallets with lateral brackets, or to be fitted from below with 6xM8 bolts (attachment material not included in the package supplied).

ER-150892 VPC Chuck 96 without base plate

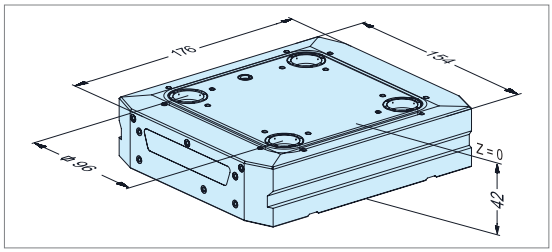

Version	Automatable chuck with a 96 mm pitch. Compact design of L 176 x W 154 x H 42 mm. Without base plate.
Connections	Laterally and from below: to open, reclamp and clean / presence check.
Application	To accommodate workpiece holders, pallets and fixtures which have been prepared with a pitch of 96mm and VPC chucking spigots 96.
To be fitted	Directly onto the machine table, base plates and pallets with lateral brackets, or to be fitted from below with 6xM8 bolts (attachment material not included in the package supplied).

ER-155772 VPC Chuck 52 with base plate 176 x 230 mm

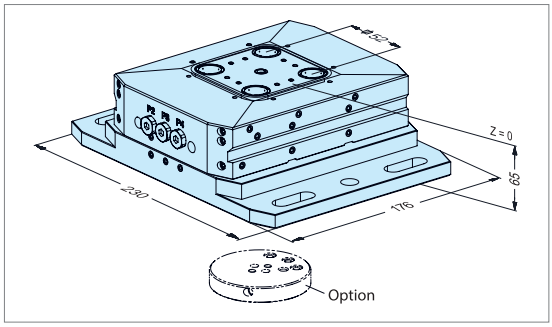

Version	Automatable chuck with a 52 mm pitch. Including base plate L 176 x W 230 x H 65 mm.
Connections	Laterally and from below (option): for opening, reclamping and cleaning/presence check.
Application	To accommodate workpiece holders, pallets and fixtures which have been prepared with a 52 mm pitch and VPC chucking spigots 52.
To be fitted	Mounting hole pattern for 50mm/M12 grid and for machine table with a T-slot distance of 50/63/80/100 mm (bolts and T-nuts are not included in the package supplied).
Option	Chuck control possible from below with a suitable adapter (on request).

ER-155774	VPC Chuck 96 with base plate 176 x 230 mm

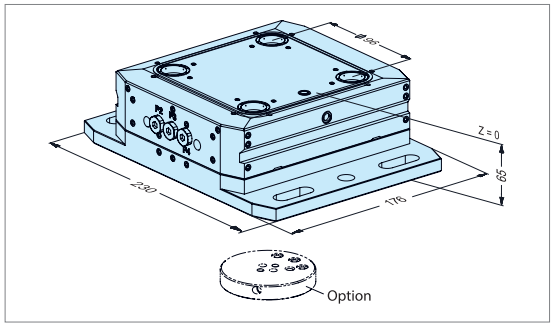

Version	Automatable chuck with a 96 mm pitch. Including base plate L 176 x W 230 x H 65 mm.
Connections	Laterally and from below (option): for opening, reclamping and cleaning/presence check.
Application	To accommodate workpiece holders, pallets and fixtures which have been prepared with a 96 mm pitch and VPC chucking spigots 96.
To be fitted	Mounting hole pattern for 50mm/M12 grid and for machine table with a T-slot distance of 50/63/80/100 mm (bolts and T-nuts are not included in the package supplied).
Option	Chuck control possible from below with a suitable adapter (on request).

EROWA VPC

Chucking spigots

ER-150897	VPC chucking spigot 52 4 pieces

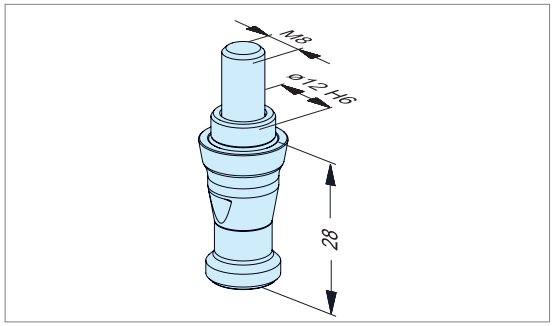

Version	4 centering spigots. Steel, hardened, ground.
Application	In combination with VPC Chuck 52. To be fitted to workpiece holders, pallets and fixtures that have been prepared with a 52 mm pitch.
To fit	With open-ended wrench, wrench width 11mm, 9Nm.

ER-150898	VPC chucking spigot 96 4 pieces

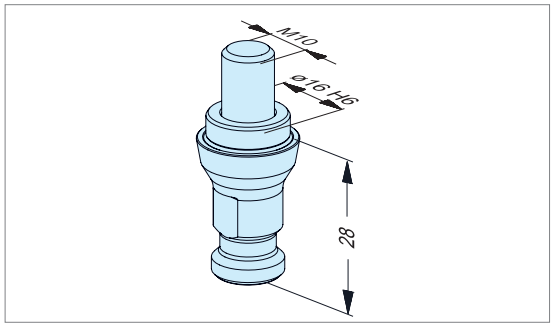

Version	4 centering spigots. Steel, hardened, ground.
Application	In combination with VPC Chuck 96. To be fitted to workpiece holders, pallets and fixtures that have been prepared with a 96 mm pitch.
To fit	With open-ended wrench, wrench width 11mm, 18Nm.

EROWA VPC

Auxiliary equipment

ER-155470 VPC alignment pallet 52

Version: VPC alignment pallet with ground alignment surface, four Z-measuring surfaces and a ø 12 mm center borehole.

Application: Alignment of the angle position and determination of the center and the Z-values of VPC Chuck 52.

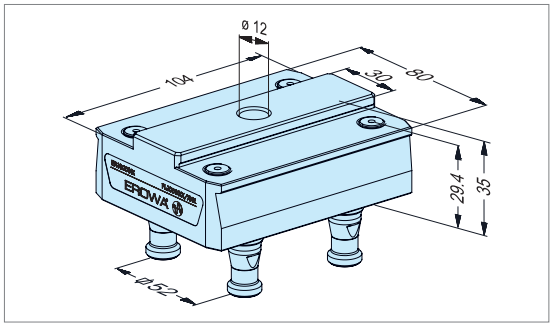

ER-155480 VPC alignment pallet 96

Version: VPC alignment pallet with ground alignment surface, four Z-measuring surfaces and a ø 12 mm center borehole.

Application: Alignment of the angle position and determination of the center and the Z-values of VPC Chuck 96.

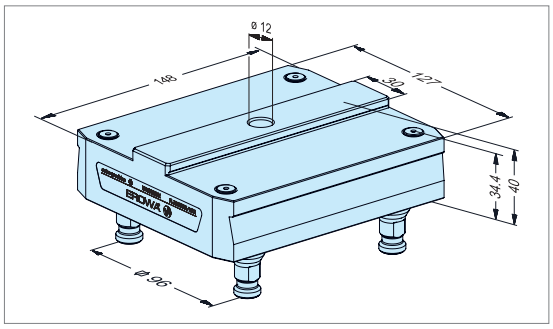

ER-155475 VPC cover 52

Version: Aluminum, anodized. Including 4 chucking spigots.

Application: Manual. Prevents the intrusion of dirt and chips into VPC Chuck 52.

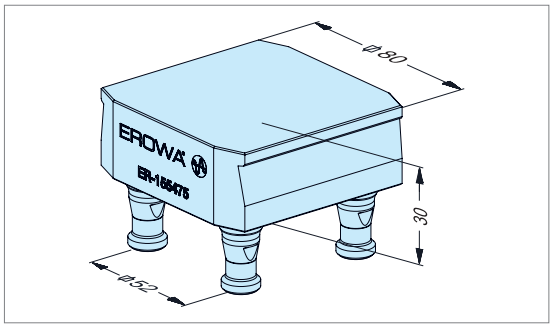

ER-155485 VPC cover 96

Version: Aluminum, anodized. Including 4 chucking spigots.

Application: Manual. Prevents the intrusion of dirt and chips into VPC Chuck 96.

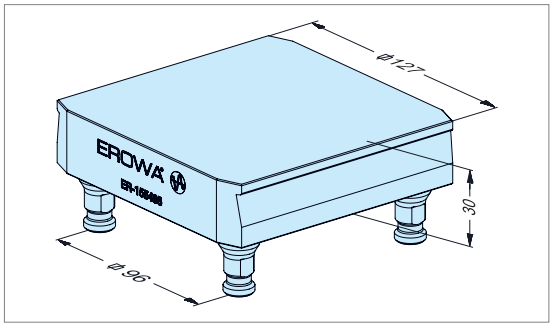

ER-155220 Base plate 176 x 230 mm universal for VPC Chuck 52 & 96

Version	Height 23 mm; steel, unhardened. Including attachment components for VPC Chuck.
Application	As interface between VPC Chucks 52 & 96 and the machine table.
To fit	Attachment bore pattern for 50 mm grid/M12 and for machine tables with T-slot distances of 50/63/80/100 mm (bolts and T-nuts are not included in the package).
Option	Chuck control possible from below with the corresponding adapter (on request).

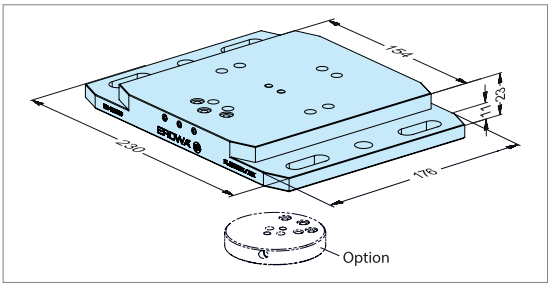

ER-155498 Spare seal for VPC chuck 52

Version	1 sealing ring suitable for VPC Chuck 52.
Application	Remove existing seal, prepare spare seal and glue in according to instructions supplied.

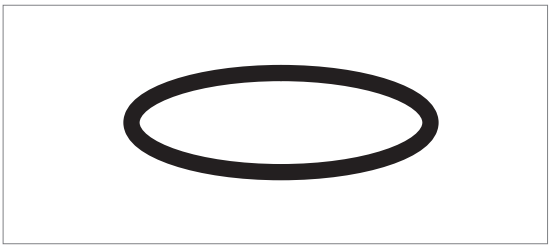

ER-155499 Repair kit to VPC chuck 52

Version	All the wearing parts for VPC Chuck 52.
Application	Dismantle chuck according to instructions supplied and replace parts.

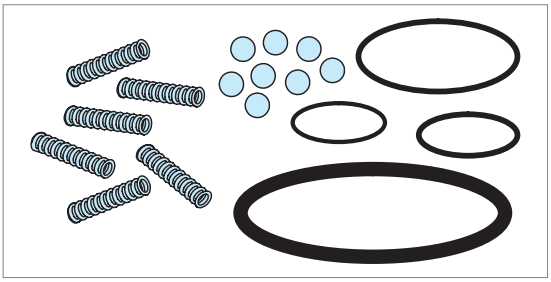

ER-167498 Spare Seal for VPC Chuck 96

Version	1 sealing ring suitable for VPC Chuck 96.
Application	Remove existing seal, prepare spare seal and glue in according to instructions supplied.

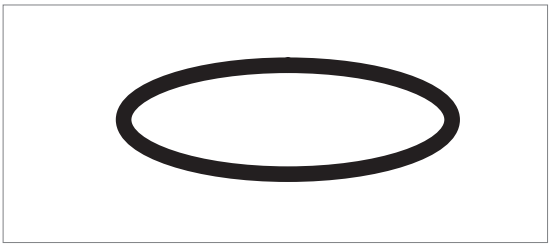

ER-167499 Repair kit to VPC Chuck 96

Version	All the wearing parts for VPC Chuck 96.
Application	Dismantle chuck according to instructions supplied and replace parts.

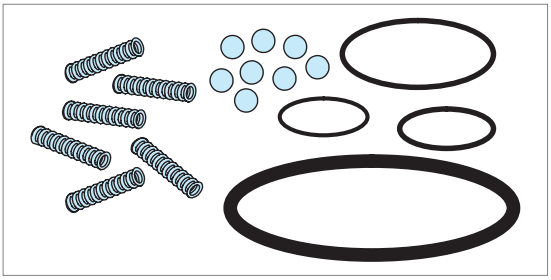

EROWA Blank Vise

Robust quality and precision

For holding blanks, a strong connection between clamping elements and workpiece is the decisive factor.

With the EROWA blank vise, workpieces are securely clamped with high clamping power at minimum height. The vise features a very compact and robust, but nevertheless light design.



Applications

Handling

Manual / Loading facility / Robot

Function



01 | Clamping jaws
In various versions, can be changed quickly.

02 | Mounting thread
For mounting the workpiece fixed stop.

03 | Base component
Compact and robust design with integrated gripper slot.

04 | Protection
For the spindle, maintenance-free and sealed.

05 | Key / keyway
For positioning the clamping jaws (20 mm grid).

06 | Stamp clamping jaws
Minimal clamping height (3 mm). Pre-stamping on the stamping station is not required.

07 | Spindle
Access from both sides for clamping and unclamping.

Blank Vise

Technical data - Blank vise

Blank vise	148 P	72 / 72 U
Clamping power at 90 Nm torque	35,000 N	
Clamping power at 30 Nm torque		10,000 N
Repeatability	0.02 mm	0.02 mm
Clamping range	0 - 165 mm	0 - 91.5 mm
Spindle/slide	wear-free and low maintenance	
Material	rust-resistant, hardened	
Options	various clamping jaws	
	Chucking spigots for ITS or MTS	
	Torque wrench	

EROWA Blank Vise in action

Flexible and versatile in use

Depending on requirements, the clamping jaws can be used individually, allowing a large range of different workpiece sizes to be clamped.

FACTS

- Powerful blank holding without pre-stamping
- Clamping power up to 35 kN
- Large clamping range 0 - 165 mm
- Repeatability 0.02 mm
- Flexible with exchangeable jaws
- Prepared for automation



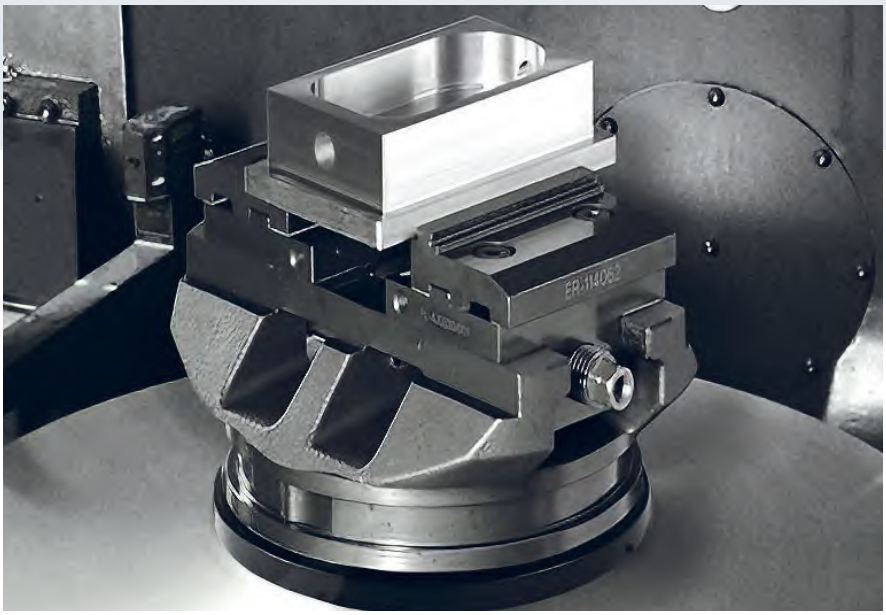

Thanks to the built-in interface, the blank vise can be clamped in the EROWA PowerChuck P, Production-Chuck 210 Combi, and MTS Single chucks.



The blank vise allows powerful and reliable clamping up to 35 kN.

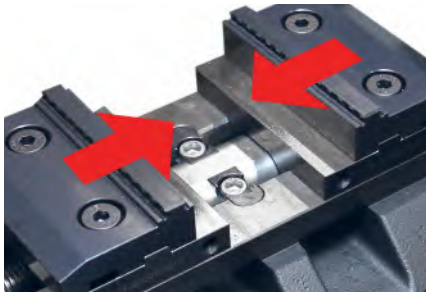

The blank vise features excellent centering accuracy and repeatability. The workpiece is centrically clamped by a clamping spindle that is accessible on both sides.



The clamping jaws can be exchanged and offer a flexible clamping range of up to 165 mm and can be mounted rotated 180°.

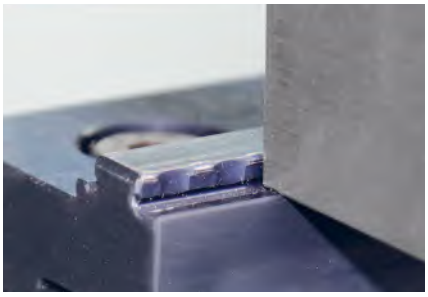

Thanks to the stamping technology, workpieces are held firmly and securely at a clamping height of only 3 mm.



Blank vises can be automated - the carrier pallet is prepared for EWIS chip and has a gripper slot. This allows it to be picked up with the appropriate robot gripper.

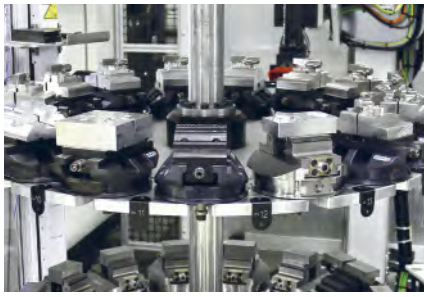

Equipped blank vises loaded in the robot magazine. The proportion of productive hours on the machine tool is significantly increased.

EROWA Blank Vise

The components

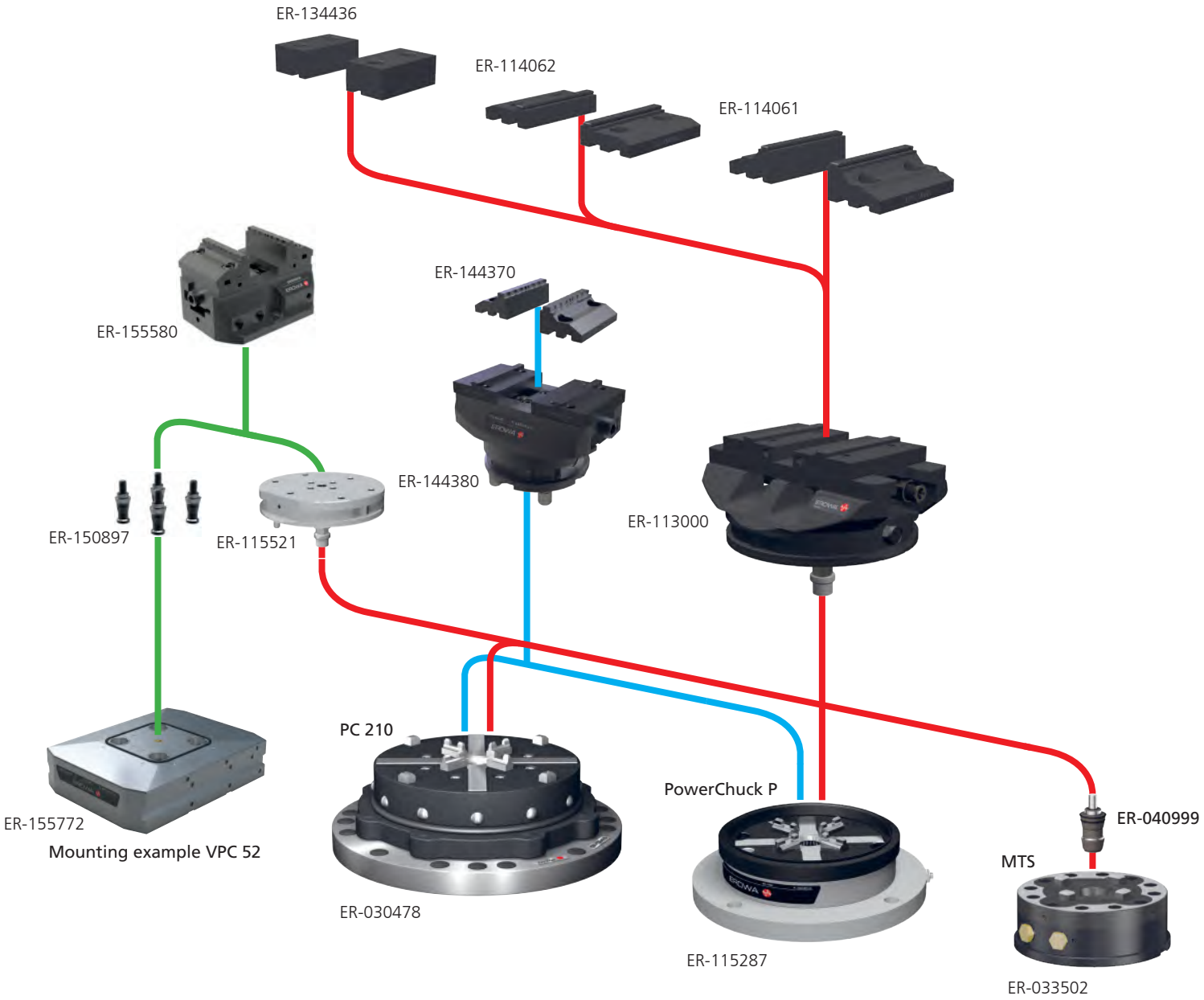

To make it easier for you to find your way about the fields of application for EROWA products, we use the following symbols in all our documents:

1. Manual operation
2. Operate with compressed air jet
3. Operate with manual valve
4. Operate with manual control unit
5. Operate with electro-pneumatic control unit
6. With central flushing clearance
7. Suited for submerged operation
8. Corrosion-resistant material
9. Suited for automatic operation
10. Handling with EROWA Robot gripper S
11. Handling with EROWA Robot gripper Combi
12. Handling with EROWA Robot gripper C
13. Handling with EROWA Robot gripper 72
14. Handling with EROWA Robot gripper 115
15. Handling with EROWA Robot gripper 148
16. Handling with EROWA Robot gripper RN PC 210
17. Handling with EROWA Robot gripper RCS
18. Handling with EROWA Robot gripper WGS-500

EROWA BLANK VISE

Blank vise		168
Blank vise	Clamping jaws	169
Blank vise	Accessories	170

For chip-removing processes

For EDM sinking

For WEDM

EROWA Blank vise

Blank vise

Technical data	Blank vise 148 P	Blank vise 72 and 72 U
Clamping power at 90 Nm torque	35,000 N	
Clamping power at 30 Nm torque		10,000 N
Repeating accuracy	0.02 mm	0.02 mm
Clamping range	0 - 165 mm	0 - 91.5 mm
Spindle/slide	wear-free and low maintenance	
Material	rust-resistant, hardened	

ER-144380 Blank vise 72





Version: Blank vise 72, excluding camping jaw and chucking spigots.

Application: To clamp workpieces. For use on ITS Chuck, PC 210 Combi and PowerChuck P.

Accessories: Stamp jaws ER-144370, chucking spigot F/M Production ER-010742, lateral stops, torque wrenches, etc.

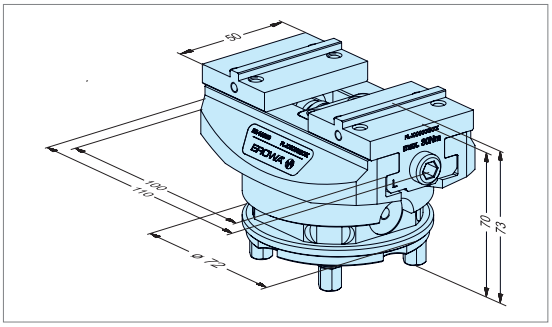

ER-155580 Blank vise 72 U





Version: Blank vise 72 U with universal fitting options. Excluding jaws.

Application: To clamp workpieces. Can be used on VPC Chuck 52, be fitted to pallet ø115 or ø148 via reference circle ø37mm, as well as directly onto the machine table, etc.

Accessories: Stamp jaws 15mm ER-144370, VPC chucking spigot 52 ER-150897, lateral stops, torque wrench, etc.

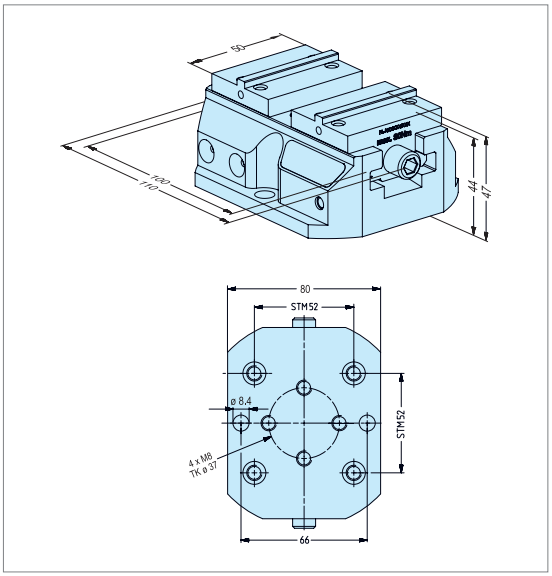

ER-113000 Blank vise 148 P





Version: Blank vise 148 P, excluding camping jaw and chucking spigots.

Application: To clamp workpieces. For use on PC 210 Combi, PowerChuck P and MTS/MTS2.0 SingleChuck.

Accessories: Clamping jaws ER-114061, ER-114062 and ER-134436, chucking spigot F/M Production ER-010742 or MTS chucking spigot P ER-040999, lateral stops, torque wrenches, etc.

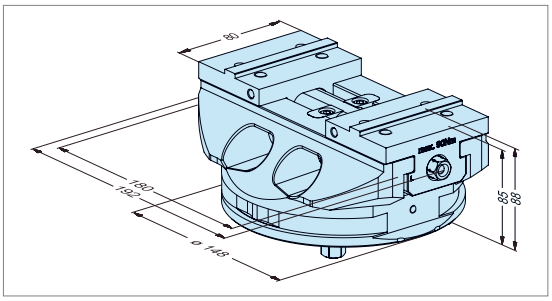

EROWA Blank Vise

Clamping jaws

ER-144370 Stamp jaws 15mm
1 pair for Blank vise 72 / 72 U

Version	Q & T steel, hardened and ground, clamping height: 15mm.
Application	To clamp workpieces on Blank Vise 72 (ER-144380), without pre-machined surfaces.
To fit	With M5x12 socket head bolts (supplied).
Note	Supplied in pairs, with 4 M5x12 socket head bolts (ER-000930).

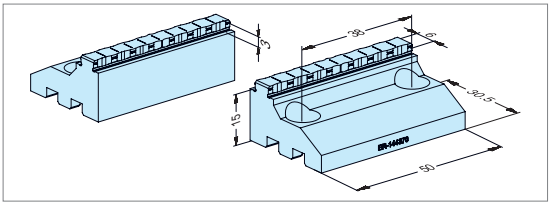

ER-114061 Stamp jaws 25 mm
1 pair for Blank Vise 148 P

Version	Q & T steel, hardened and ground, clamping height: 25mm.
Application	To clamp workpieces on blank vise 148 P (ER-113000) without prepared surfaces.
To fit	With M8 x 16 hexagon socket bolts (supplied).
Note	Supplied in pairs, with 4 M8 x 16 hexagon socket bolts (ER-000966).

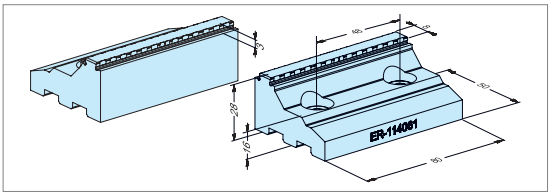

ER-114062 Stamp jaws 15 mm
1 pair for Blank Vise 148 P

Version	Q & T steel, hardened and groud, clamping height: 15mm.
Application	To clamp workpieces on Blank Vise 148 P (ER-113000), without pre-machined surfaces.
To fit	With M8x16 low-head socket bolts (supplied).
Note	Supplied in pairs, with 4 M8x16 socket head bolts (ER-088571).

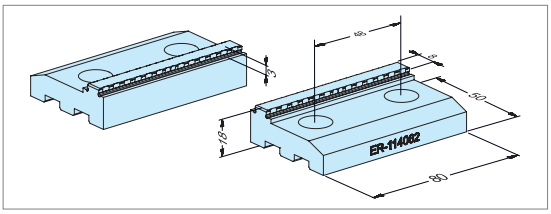

ER-134436 Clamping jaw soft
1 pair for Blank Vise 148 P

Version	Q & T steel, unhardened, dimension 80 x 48 x 30mm.
Application	For producing of jaws with contours of your choice.
To fit	With hexagon socket head bolts M8 x 16mm.
Note	Supplied in pairs, with 4 hexagon socket head bolts.

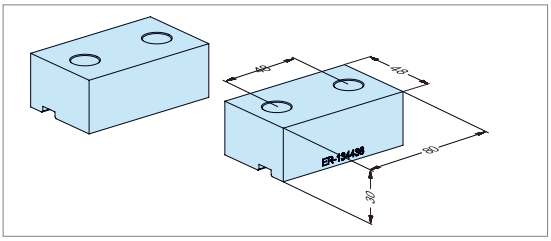

EROWA Blank Vise

Accessories

ER-040999 **MTS chucking spigot P**
1 piece

auto

Version	MTS chucking spigot, including attachment bolt and protective cap.
Application	To be mounted on pallets ø 148 P.
Note	In automatic operation additionally use MTS sealing ring ER-045969.

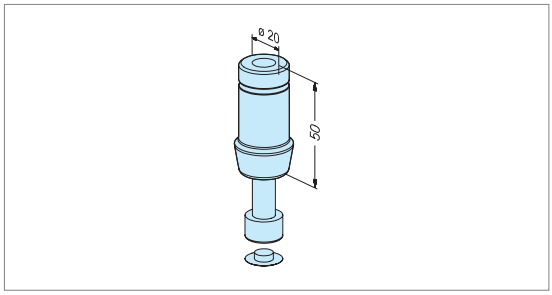

ER-010742 **Chucking spigot F/M production**
1 unit

Version	Manual. M10 x5 0mm bolt, 12.9 quality (without flushing hole).
Application	To mount on EROWA pallets for chip-cutting machining processes.

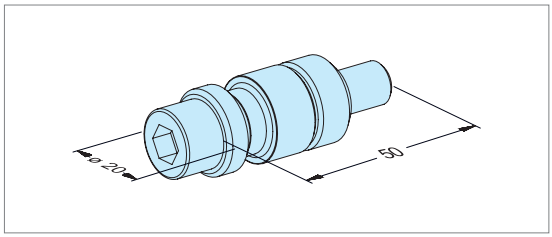

ER-015465 **Chucking spigot F/A EDM M10 x 45**
for flushing, 20 pieces

auto

Version	Automatic. M10x45mm bolt, with flushing hole.
Application	For ITS electrode holders that are changed automatically. For EDM and light chip cutting.

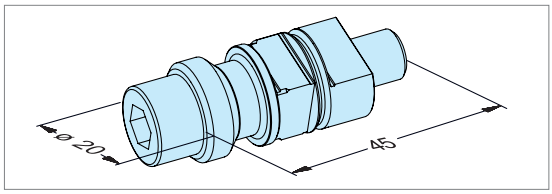

ER-165144 **Torque wrench 10 – 60 Nm**

Version	Torque wrench, 10-60 Nm.
Application	For blank vise 72 and centering vise 85.



ER-068026 **Torque wrench 20 - 120 Nm**
1/2“ Garant 65 6050

Version	Torque wrench, 20-120 Nm.
Application	For blank vise 148 P and centering vise 148.



ER-115644 Hexagon-Socket wrench, SW 12 mm 1/2“

Version	Hexago wrench socket, 12mm, with 1/2“ drive.
Application	For EROWA blank holder 148 P.



ER-105291 Hexagon socket screwdriver bit 3/8’ 6mm CleverClamp

Version	Allen bit, 6 mm, with 3/8“ drive.
Application	For CleverClamp and blank vise 72.



ER-082273 Magnetic stop

Version	Stop made of anodized aluminum.
Application	Magnetic stop used for positioning workpieces in vises.
Important	Remove the magnetic stop before machining the part.

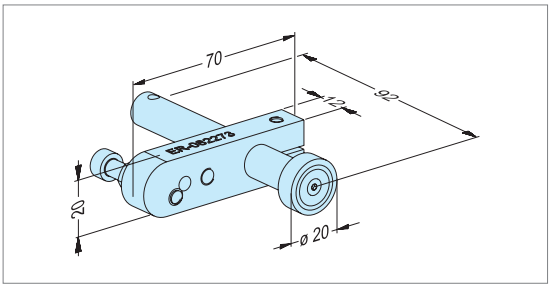

ER-099201 Milling stop M6 for CleverClamp, Raw part clamps 148 P

Version	Adjustable steel stop.
Application	Lateral stop for ClampSet and CleverClamp clamping or stop element, as well as for blank vise 148.
To fit	Use bolts supplied to fit it laterally to the desired clamping or stop elements

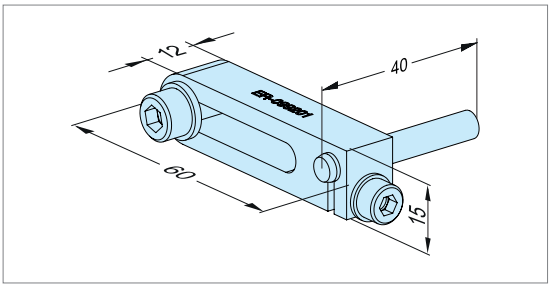

ER-159563 Milling stop M4 for Raw part clamps 72 & 72 U

Version	Adjustable steel stop.
Application	Lateral stop can be fitted to the slides on blank vises 72 and 72 U.
To fit	Used bolt supplied to fit it laterally in the desired position.

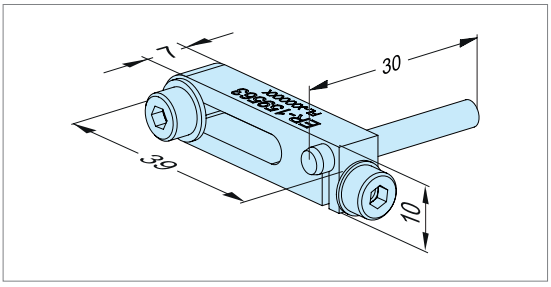

EROWA self-centering vise

High quality and precision

Is a high degree of precision and repeatability a must when it comes to clamping your workpieces?

The EROWA self-centering vise satisfies the highest standards. The self-centering vise combines precision, stability and flexibility in the machining of complex workpieces while simultaneously reducing set-up times.

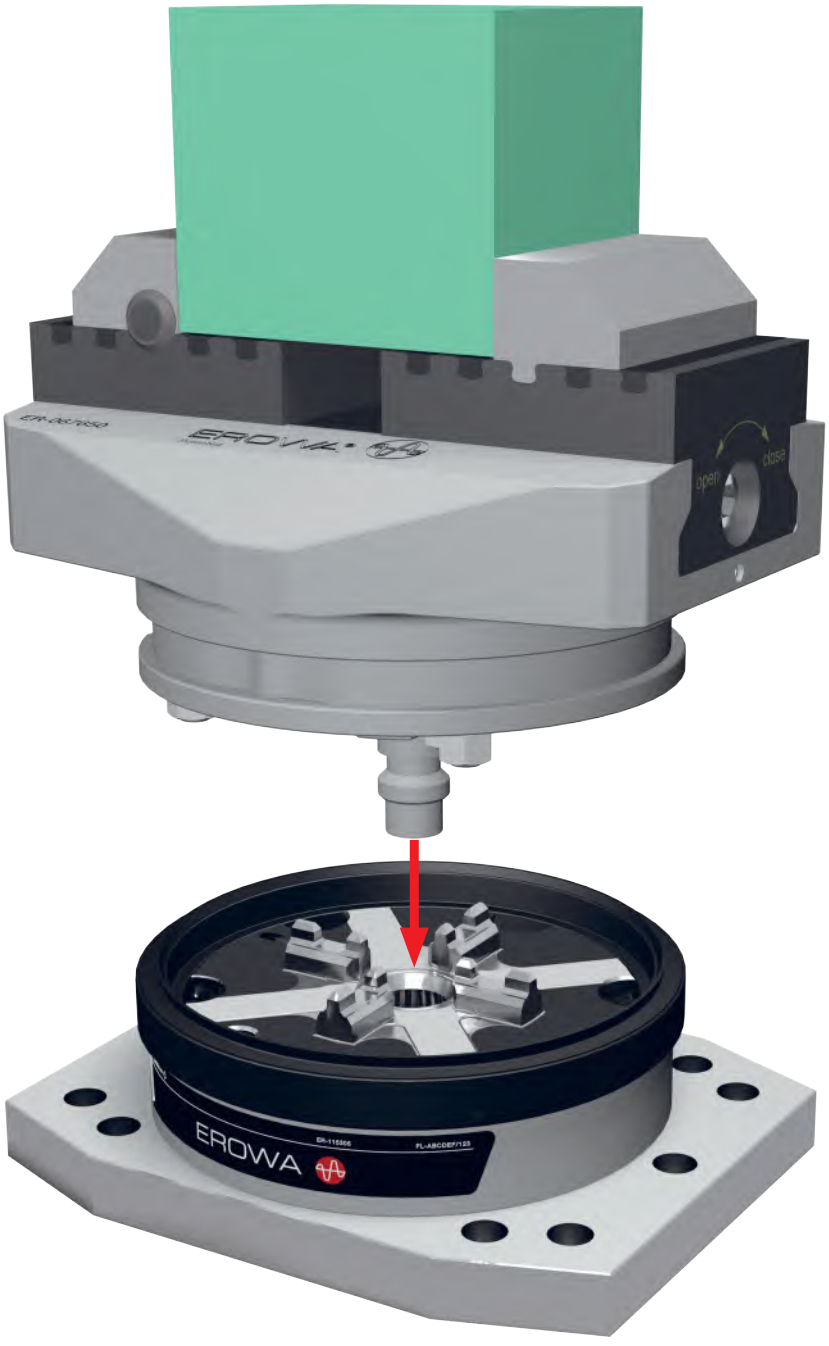

Applications

Handling

Manual / Loading facility / Robot

Function

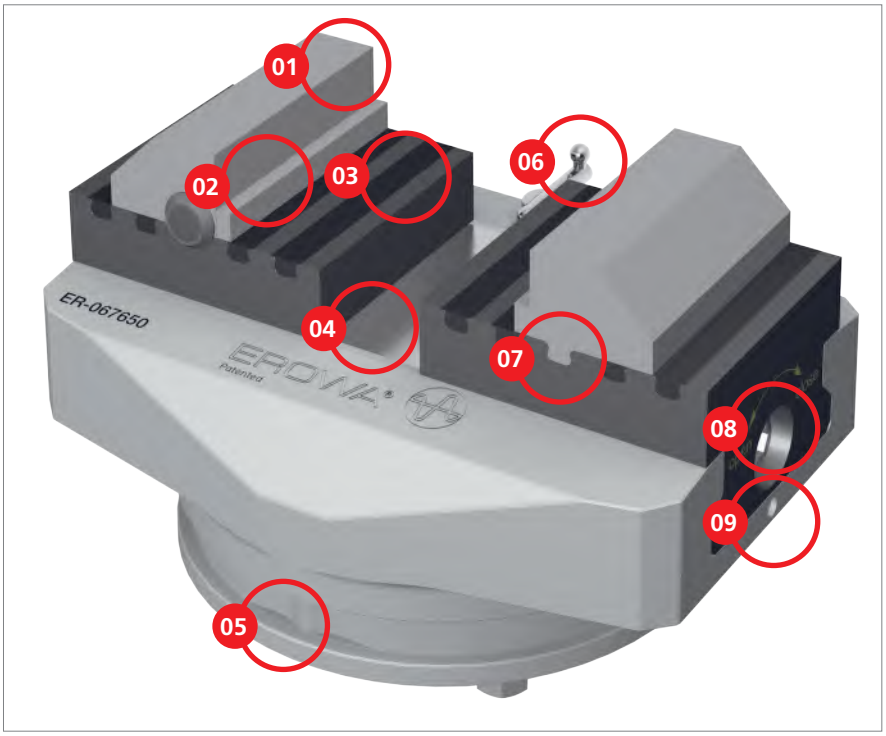

01 | Clamping jaw
Various versions; can be exchanged quickly without any tools.

02 | Workpiece support
Can be exchanged quickly.

03 | Dirt cover
Simple but effective.

04 | Protective cover
For the precision spindle, maintenance-free and well protected.

05 | Base component/pallet
Made from one piece; hardened and corrosion-resistant. Pallet with EROWA P (production) or G-centering.

06 | Stop
Adjustable workpiece stop.

07 | Key/keyslot
To position the clamping jaws (15mm grid).

08 | Spindle
Coated spindle with wrench flats on both sides for clamping and releasing the sliders.

09 | Setting screw
Adjustment option on both sides to correct the center position

Technical Data - Self Centering Vise

	Self Centering Vise 148	Self Centering Vise 85
Clamping force at 60 Nm	19,000 N	
Clamping force at 35 Nm		14,000 N
Repeatability	0.01 mm	0.01 mm
Clamping stroke of spindle	30 mm	30 mm
Opening width	5-155 mm	5-95 mm
Contact spacing of jaw positioning	15 mm	15 mm
Clamping mechanism	maintenance-free	maintenance-free
Material	hardened, rust-resistant	hardened, rust-proof
Compatibility with EROWA tooling (depending on model)	ITS, PowerChuck P, PC210 Combi, MTS Single Chuck	ITS, PowerChuck P, PM85
Options	- different jaws, - dust cover for profiles - pads in various heights - clamping pin for ITS or MTS - torque wrench	- different jaws, - dust cover for profiles - pads in various heights - clamping pin for ITS - torque wrench

EROWA self-centering vise in use

Clamps reliably and flexibly

The self-centering vise 148 P has been made from one piece and guarantees the highest degree of stability. The integrated pallet with P centering is the precise interface with the chuck and provides highest process reliability in automatic operation.

FACTS

- Pallet and vise base component made from one piece
- Slide and spindle are high-tech coated and are wear-free
- Two different sizes (85 +148)
- Great selection of clamping jaws
- Can be automated





The self-centering vises can be automated. EROWA provides a suitable handling facility for every field of application and for all technologies.



The entire body of the self-centering vise has been made of corrosion-resistant and hardened steel. The P-centering stands for power and precision.

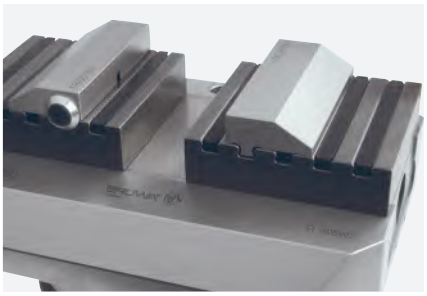

The slide and the spindle are high-tech coated and wear-free. The precision spindle and the guide rails are additionally protected against contamination.



The clamping jaws can be put on manually without the use of any tools.



The workpiece is powerfully clamped and easily accessible from all sides.



The SlipStop® surface prevents unhardened workpieces from slipping off. This more than doubles the holding power.

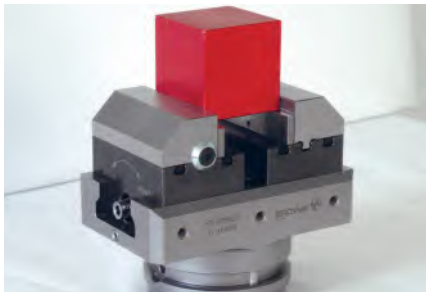

The smaller model 85 P self-centering vise is intended for use on smaller machines.

EROWA Self Centering Vise

The components

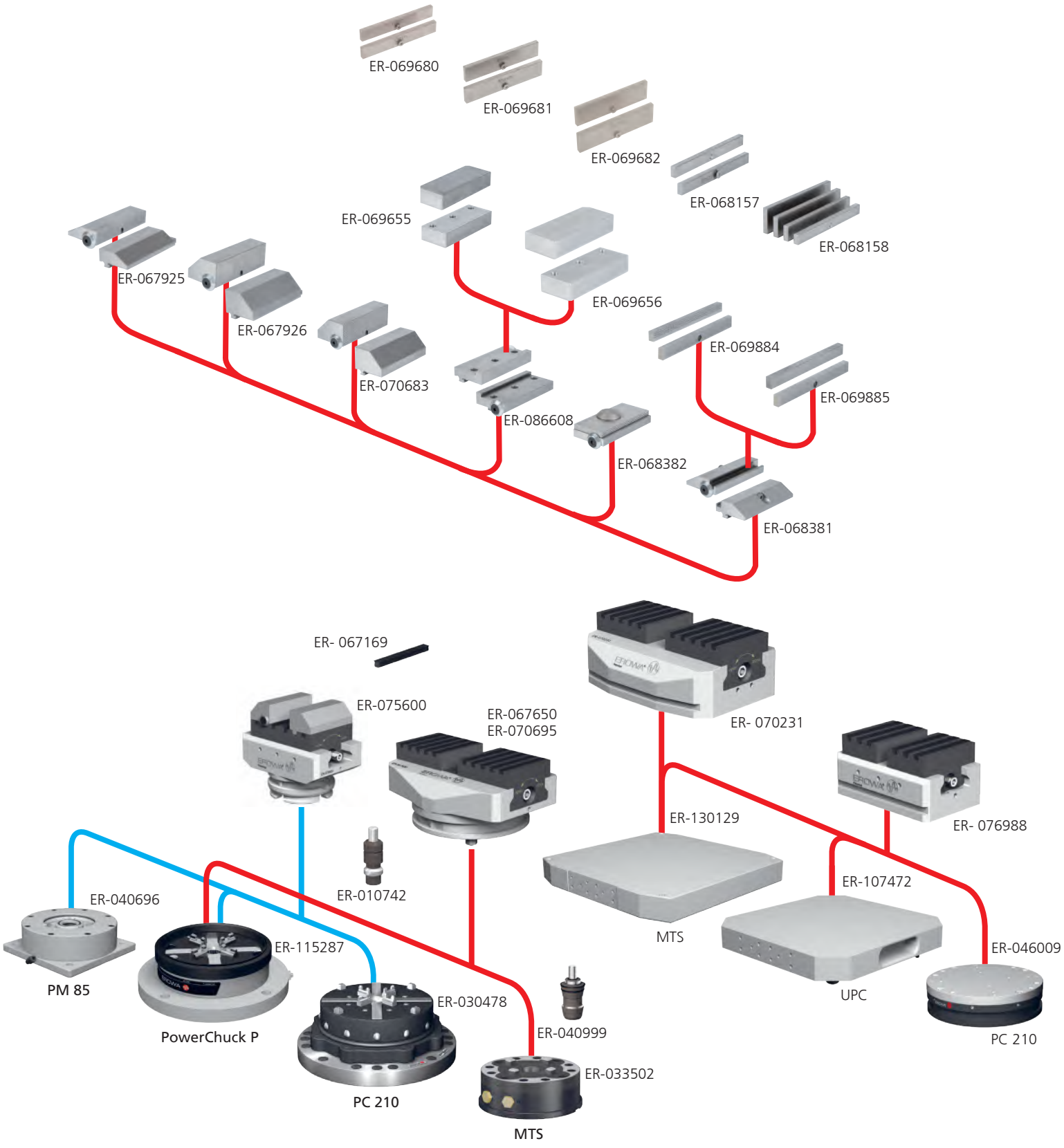

To make it easier for you to find your way about the fields of application for EROWA products, we use the following symbols in all our documents:

1. Manual operation
2. Operate with compressed air jet
3. Operate with manual valve
4. Operate with manual control unit
5. Operate with electro-pneumatic control unit
6. With central flushing clearance
7. Suited for submerged operation
8. Corrosion-resistant material
9. Suited for automatic operation
10. Handling with EROWA Robot gripper S
11. Handling with EROWA Robot gripper Combi
12. Handling with EROWA Robot gripper C
13. Handling with EROWA Robot gripper 72
14. Handling with EROWA Robot gripper 115
15. Handling with EROWA Robot gripper 148
16. Handling with EROWA Robot gripper RN PC 210
17. Handling with EROWA Robot gripper RCS
18. Handling with EROWA Robot gripper WGS-500

EROWA SELF CENTERING VISE

Self Centering Vise 85 178
Self Centering Vise 148 178
Self Centering Vise clamping jaws 179
Self Centering Vise auxiliary equipment 181

For chip-removing processes

For EDM sinking

For WEDM

Self Centering Vise

EROWA Self Centering Vise

Self Centering Vise

Technical data	Self Centering Vise 148	Self Centering Vise 85
Clamping force at 60 Nm (35 Nm by Typ 85)	19,000 N	14,000 N
Repeatability	0.01 mm	0.01 mm
Clamping stroke of spindle	30 mm	30 mm
Opening width	5-155 mm	5-95 mm
Contact spacing of jaw positioning	15 mm	15 mm

ER-076988 Self Centering Vise 85 without pallet

INOX

Version	Stainless material, hardened and ground.
Accessories	Various jaws, torque wrenches etc.
Application	To clamp workpieces. To be mounted on pallets or directly on the machine table.

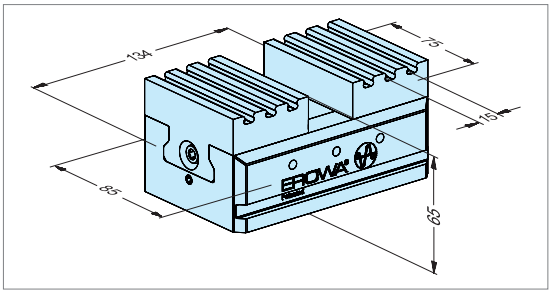

ER-075600 Self Centering Vise 85 P

INOX auto

Version	Rust-resistant material, hardened and ground. Pallet fully integrated.
Optional Accessories	Chucking spigot F/M Production ER-010742.
	Various clamping jaws, torque wrenches, etc.
Application	Clamping of workpieces. Operation possible on ITS, PM85 and PowerChuck P.

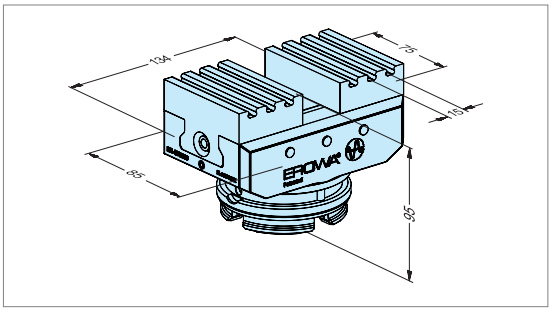

ER-070231 Self Centering Vise 148 without pallet

INOX

Version	Self-Centering Vise 148, including lateral stop.
Accessories	Various jaws, torque wrenches etc.
Application	To clamp workpieces. Mounting on pallets. Mounting directly on the machine table.

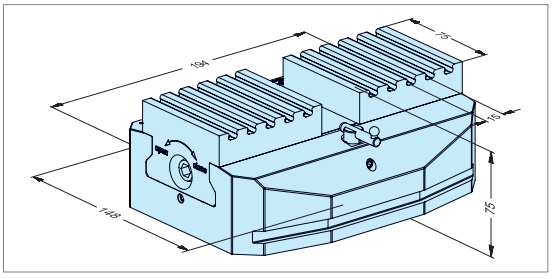

ER-070695 Self Centering Vise 148 G

INOX auto 148

Version	Self-Centering Vise 148 G, including lateral stop.
Optional Accessories	Chucking spigot F/M Production ER-010742.
	Various jaws, torque wrenches etc.
Application	To clamp workpieces. For use on PC 210 Combi, Power-Chuck P & F, UPC with ITS.

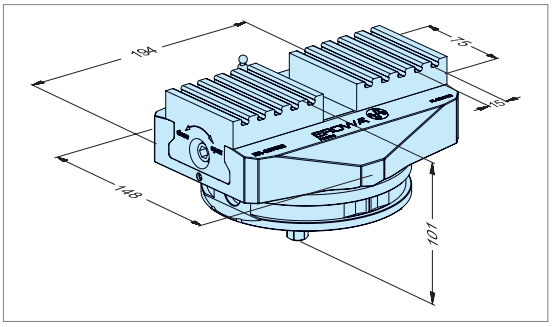

EROWA Self Centering Vise

Jaws

ER-067650 Self Centering Vise 148 P

INOX | auto | 148

Version	Self-Centering Vise 148 P, including lateral stop.
Optional	Chucking spigot F/M Production ER-010742 or MTS chucking spigot P ER-040999.
Accessories	Various jaws, torque wrenches etc.
Application	To clamp workpieces. For use on PC 210 Combi, Power-Chuck P, MTS SingleChuck.

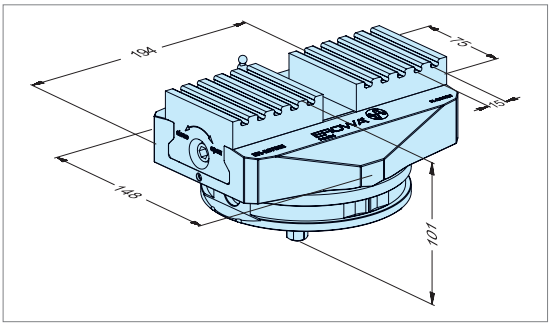

ER-067925 Jaws 13 mm for self centering vise, 1 pair

INOX

Version	Steel, hardened and ground; height: 13mm.
Note	Supplied in pairs.
Application	To clamp workpieces with machined surfaces.

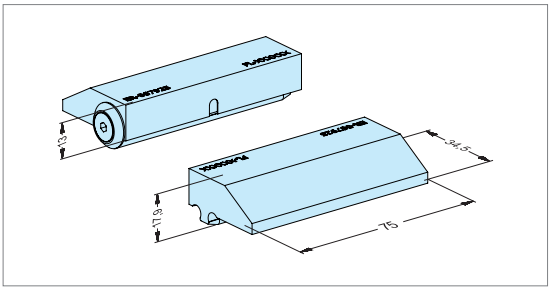

ER-067926 Jaws 24 mm for self centering vise, 1 pair

INOX

Version	Steel, hardened and ground; height: 24mm.
Note	Supplied in pairs.
Application	To clamp workpieces with machined surfaces.

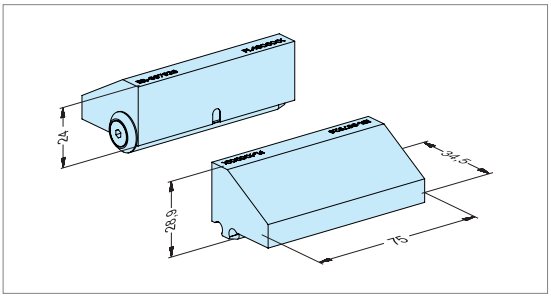

ER-070683 Jaws 24 mm grip for self centering vise, 1 pair

INOX

Version	Steel, hardened and ground; height: 24mm; with grip contours.
Note	Supplied in pairs.
Application	Ideal to clamp unhardened workpieces.

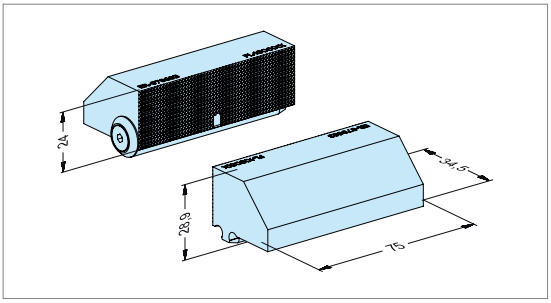

ER-086608 Adapters for interchangeable jaws for self centering vise, 1 pair

INOX

Application	Steel, hardened and ground, with attachment bolts.
Note	Supplied in pairs.
Application	To accommodate customized interchangeable jaws of your choice.

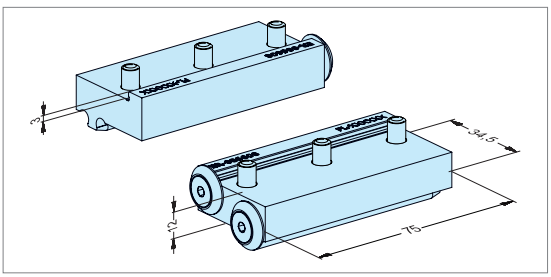

EROWA Self Centering Vise

Jaws

ER-104530 Stamp jaws 24 mm universal (1 pair) for self centering vise

INOX

Version	Steel, hardened and ground; height: 24mm.
Note	Supplied in pairs.
Application	Ideal for clamping blanks at a Minimum clamping height of 3mm and for machining the second clamping with the smooth jaw surface.

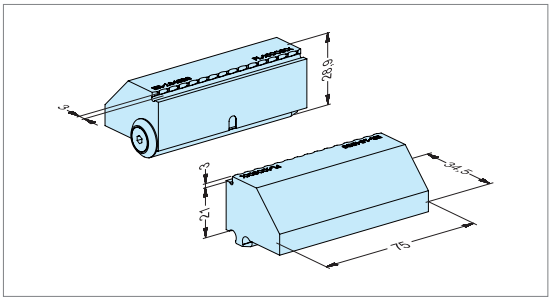

ER-069655 Interchangeable jaws steel unhardened 1 pair, to fit adapter ER-086608

Version	Steel, unhardened, dimensions: 75 x 30 x 15 mm, including attachment boreholes, fully prepared.
Note	To fit adapter ER-086608.
Application	To produce jaws with contours of your choice.

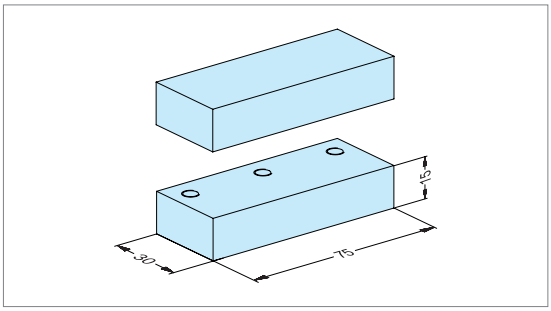

ER-069656 Interchangeable jaws Alu 1 pair, to adapter ER-086608

Version	Aluminum, dimensions: 75 x 30 x 15 mm, including attachment boreholes, fully prepared.
Note	To fit adapter ER-086608.
Application	To produce jaws with contours of your choice.

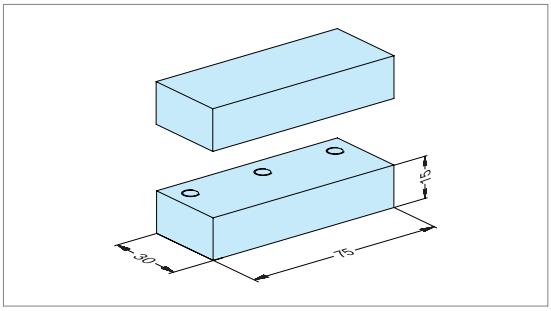

ER-068382 Pendulum jaw 1 piece, for self centering vise

INOX

Version	Hardened ground jaw with pendulum compensation for oblique workpieces.
Application	To clamp workpieces with oblique outer surfaces.
To fit	Insert.

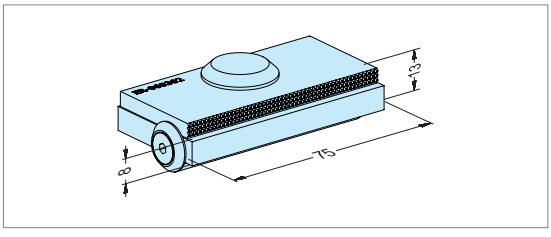

ER-068381 Adapter 5 mm for SlipStop® jaw inserts 1 pair, for self centering vise

INOX

Version	Steel, hardened and ground. With fixing screw for inserts, clamping height 5 mm.
Note	Delivered in pairs.
Application	To accomodate SlipStop® inserts ER-069884 and ER-069885.

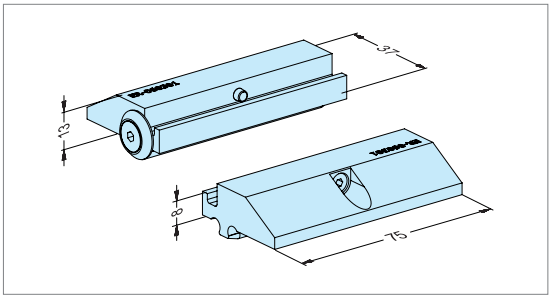

EROWA Self Centering Vise

Auxiliary equipment

ER-069884 SlipStop® insert, riffled 1 pair, for adapter ER-068381

INOX

Version	Steel, hardened and ground, height: 24mm, with riffled contour.
Note	Supplied in pairs.
Application	To clamp workpieces with machined surfaces.

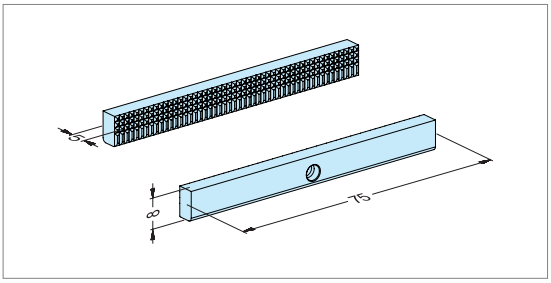

ER-069885 SlipStop® insert, ground 1 pair, for adapter ER-068381

INOX

Version	Steel hardened and ground.
Note	Delivered in pairs.
Application	Suitable for Adapter ER-068381. Ideal for the clamping of ground workpieces.

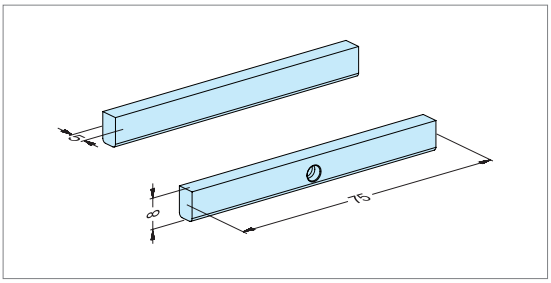

ER-068157 Spacers 8 mm, 1 pair for self Centering vise

INOX

Version	1 pair of hardened, ground supports.
Application	For the optimal positioning of workpieces at the correct height on the self-centering vise.
To fit	Insert in the jaws, the insert jaws with the supports into the profile.

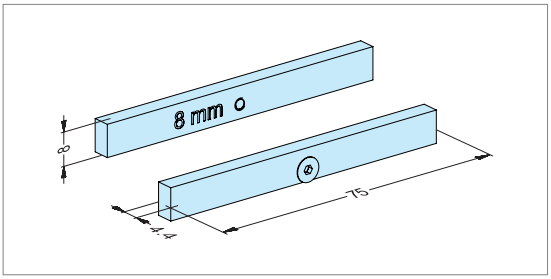

ER-069680 Support 12 mm mounted self centering vise

INOX

Version	1 pair of hardened, ground supports.
Application	For the optimal positioning of workpieces at the correct height on the self-centering vise.
To fit	Insert in the jaws, the insert jaws with the supports into the profile.

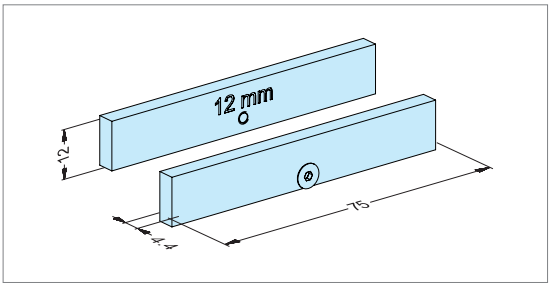

ER-069681 Support 16 mm mounted self centering vise

INOX

Version	1 pair of hardened, ground supports.
Application	For the optimal positioning of workpieces at the correct height on the self-centering vise.
To fit	Insert in the jaws, the insert jaws with the supports into the profile.

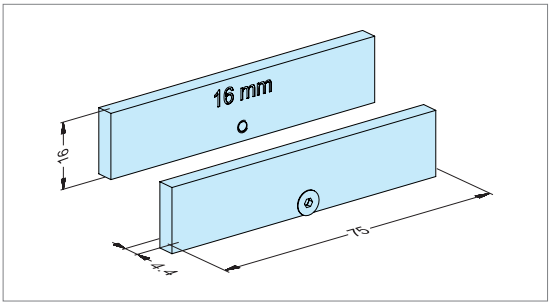

EROWA Self Centering Vise

Auxiliary equipment

ER-069682 Support 20 mm mounted Self Centering vise

INOX

Version	1 pair of hardened, ground supports.
Application	For the optimal positioning of workpieces at the correct height on the self-centering vise.
To fit	Insert in the jaws, the insert jaws with the supports into the profile.

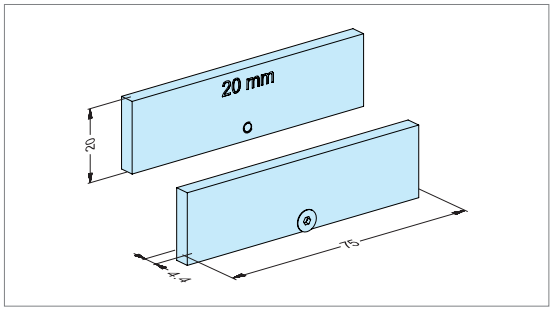

ER-068158 Spacer set (4 pairs) for self centering vise

Version	Set of ground supports, heights 8, 12, 16 and 20 mm.
Application	Support for the height positioning of workpieces.
Mounting	Insert the support into the groove of the jaw with the help of the holding device.

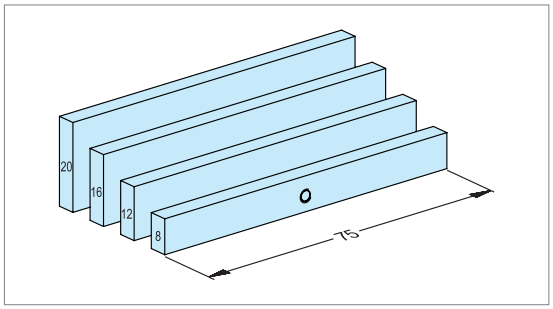

ER-067169 Chip cover for self centering vise

Version	1 plastic cover.
Application	To protect the empty profile inserts at the base of the self-centering vise.
To fit	Insert.

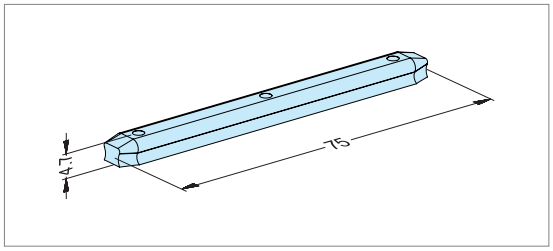

ER-165144 Torque wrench 10 – 60 Nm

Version	Torque wrench, 10-60 Nm.
Application	For blank vise 72 and centering vise 85.



ER-068026 Torque wrench 20 - 120 Nm 1/2" Garant 65 6050

Version	Torque wrench, 20-120 Nm.
Application	For blank vise 148 P and centering vise 148.



ER-068025 Hexagon-Socket wrench 14 mm 1/2“ Garant 642130



Version	Hexagon wrench socket, 14mm, with 1/2“ drive.
Application	For centering vise 148.

ER-078521 Hexagon-Socket wrench, SW 10, 3/8“



Version	Hexagon wrench socket, 10mm, with 3/8“ drive.
Application	For EROWA centering vise 85.

ER-040999 MTS chucking spigot P 1 piece

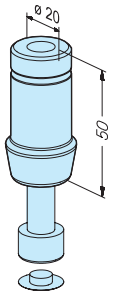

Version	MTS chucking spigot, including attachment bolt and protective cap.
Application	To be mounted on pallets ø 148 P.
Note	In automatic operation additionally use MTS sealing ring ER-045969.

ER-010742 Chucking spigot F/M production 1 unit

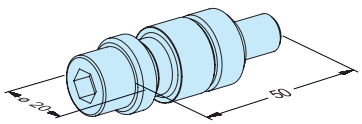

Version	Manual. M10 x5 0mm bolt, 12.9 quality (without flushing hole).
Application	To mount on EROWA pallets for chip-cutting machining processes.

ER-082273 Magnetic stop

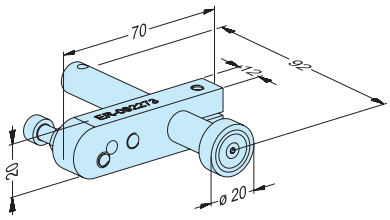

Version	Stop made of anodized aluminum.
Application	Magnetic stop used for positioning workpieces in vises.
Important	Remove the magnetic stop before machining the part.

EROWA ClampSet

For universal use and high precision

EROWA ClampSet is the modular system for the precise clamping of workpieces. It can be universally used throughout the EROWA manufacturing concept.

The base rails and clamping elements have been produced in accordance with the highest standards and enable operators to position workpieces with a high degree of precision. ClampSet is optimally suited for the high precision requirements in tool- and mold-making.

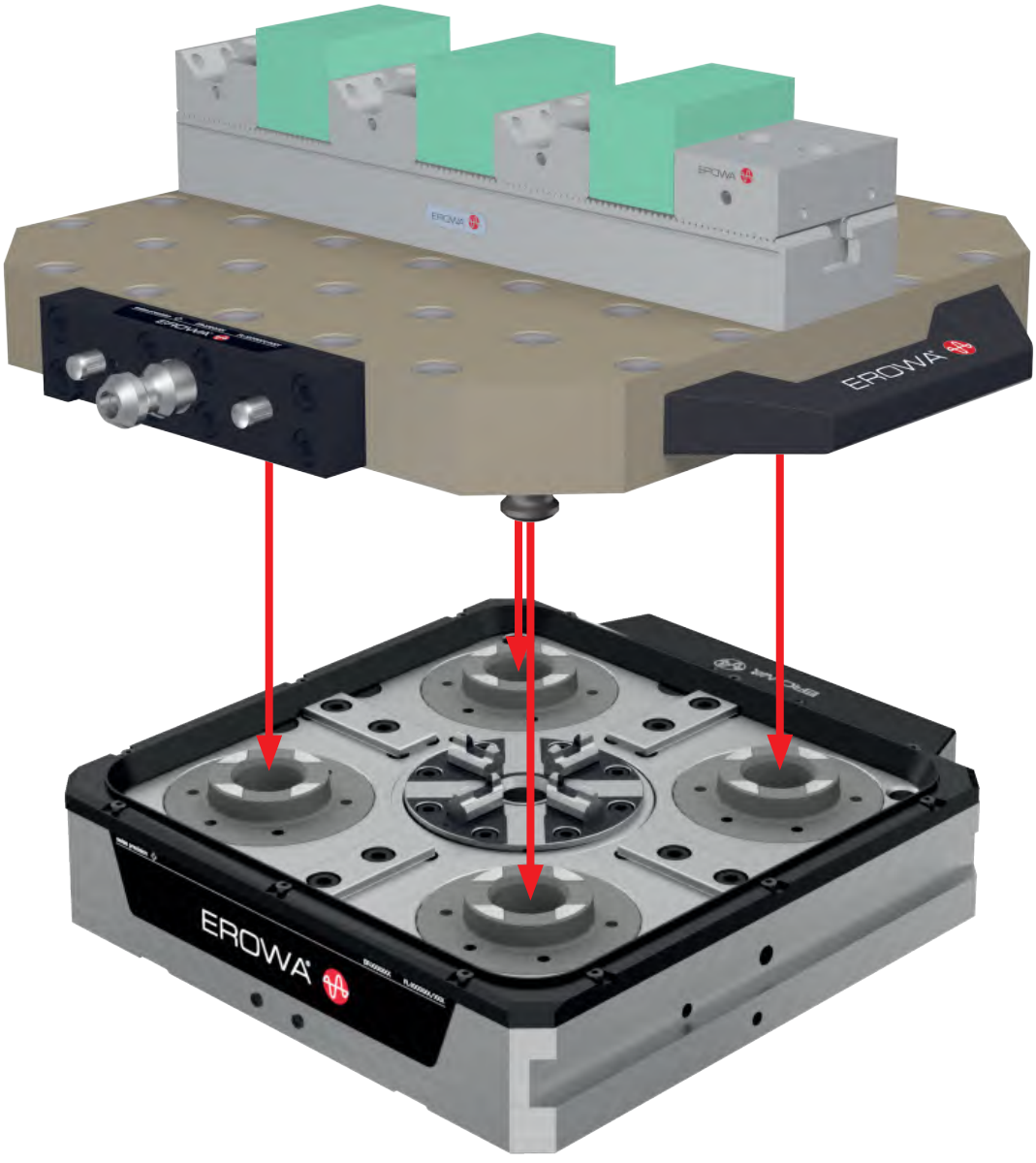

Applications

Handling

Manual / Loading facility / Robot

Function

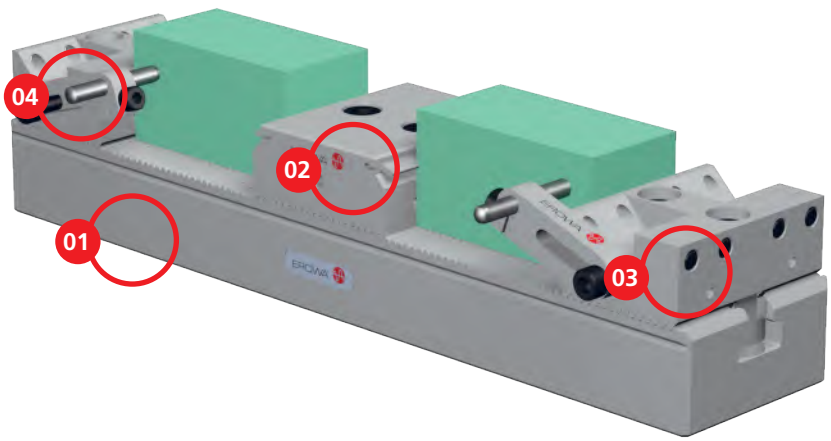

01 | ClampSet Block Base
Can be fitted to all EROWA grid pallets or directly onto the machine table with a T-slot distance of R50.

02 | ClampSet Block N
The pull-down jaw in combination with the ClampSet standard block results in the ideal pull-down effect.

03 | ClampSet Stop
The lateral stop can be attached to every ClampSet jaw.

04 | ClampSet Block Stop
Adjustable lateral stop made of steel.

Technical data - ClampSet

	ClampSet Base 220	ClampSet Base 320
Clamping range	max. 126 mm	max. 225 mm
Material	steel, hardened, ground	

EROWA ClampSet in action

Modular, flexible, precise

Whether it´s drilling, milling, grinding or EDM, ClampSet will reduce set-up times.

FACTS

- High clamping force
- Precise clamping of workpieces.
- Clamping range up to 225 mm.
- Wide selection of clamping elements
- Base rails in two different lengths (220 mm & 320 mm)



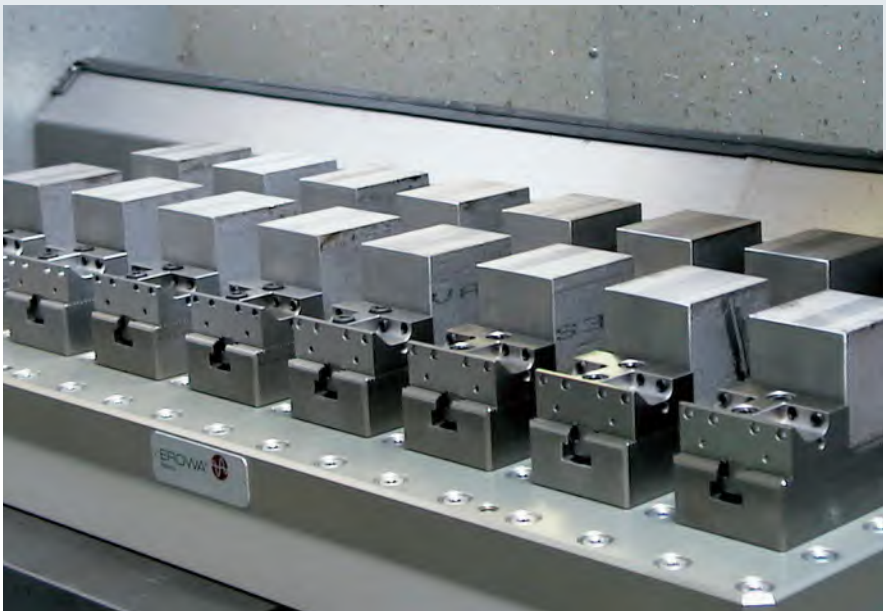

Base 220, ClampSet Standard Block and ClampSet Block F (hard jaw) to clamp blanks.

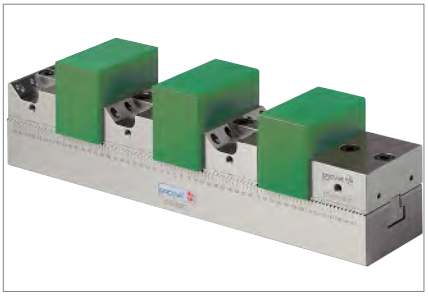

Base 320 with 3 ClampSet Standard Blocks and Block F for multiple fixtures.

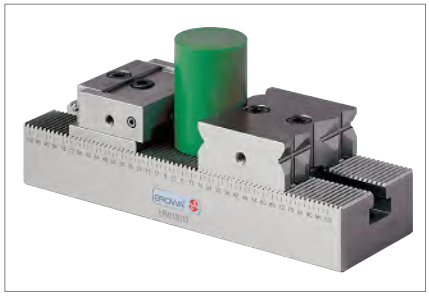

Base 220, ClampSet Slide and prismatic jaw to clamp various cylindrical parts, both horizontally and vertically.

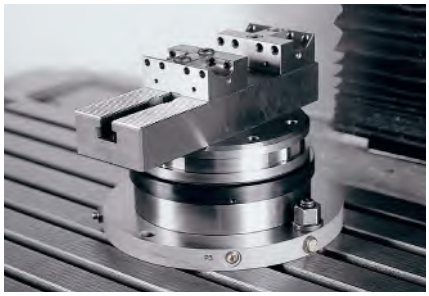

ClampSet vise on ITS pallet. Positioning to µ-accuracy and ready for use within seconds.



Short set-up times with flexible clamping elements: Two EROWA ClampSet vises on UPC grid pallet.



ClampSet also for long and big workpieces.



EROWA ClampSet

The components

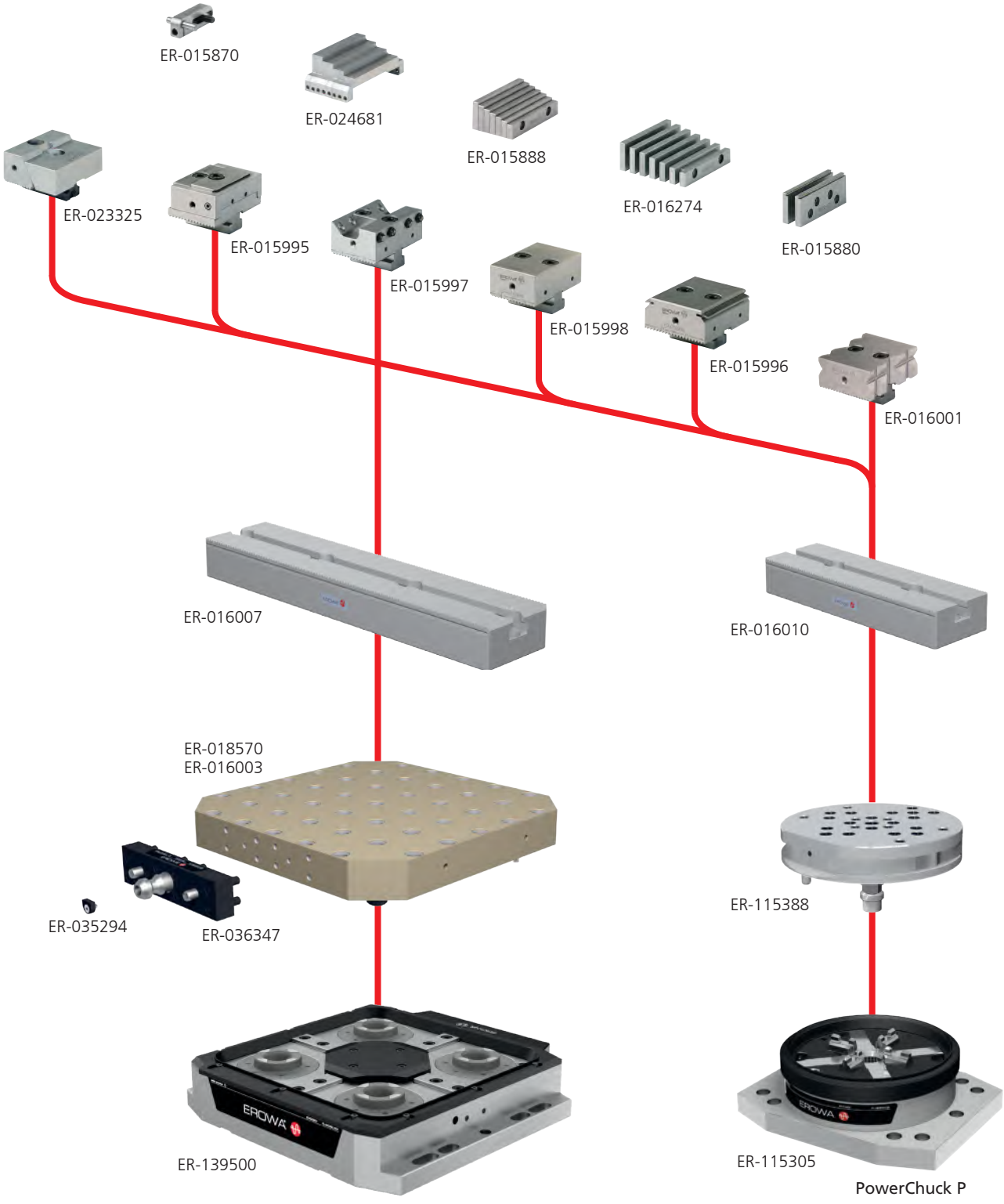

To make it easier for you to find your way about the fields of application for EROWA products, we use the following symbols in all our documents:

1. Manual operation
2. Operate with compressed air jet
3. Operate with manual valve
4. Operate with manual control unit
5. Operate with electro-pneumatic control unit
6. With central flushing clearance
7. Suited for submerged operation
8. Corrosion-resistant material
9. Suited for automatic operation
10. Handling with EROWA Robot gripper S
11. Handling with EROWA Robot gripper Combi
12. Handling with EROWA Robot gripper C
13. Handling with EROWA Robot gripper 72
14. Handling with EROWA Robot gripper 115
15. Handling with EROWA Robot gripper 148
16. Handling with EROWA Robot gripper RN PC 210
17. Handling with EROWA Robot gripper RCS
18. Handling with EROWA Robot gripper WGS-500

EROWA CLAMPSET

ClampSet	Technical data	190
ClampSet	Base	192
ClampSet	Clamping elements	193
ClampSet	Auxiliary equipment	195

For chip-removing processes

For EDM sinking

For WEDM

EROWA ClampSet

clamping elements

Application ClampSet Standard block	
ER-015997	ClampSet Standard block
ER-015998	ClampSet Block F
ER-016010	ClampSet Base 220
ER-016007	ClampSet Base 320

ClampSet Standardblock Number of	Clamping power in kg ±10% at a torque of		
ball-pressure bolts	5 Nm	10 Nm	15 Nm
2	900	1750	2500
4	1450	2750	3900

For the sake of clamping precision and safety, it is very important to tighten the bolts with a torque wrench.

Data given are guideline values, which may be impaired by dirt and other environmental influences.

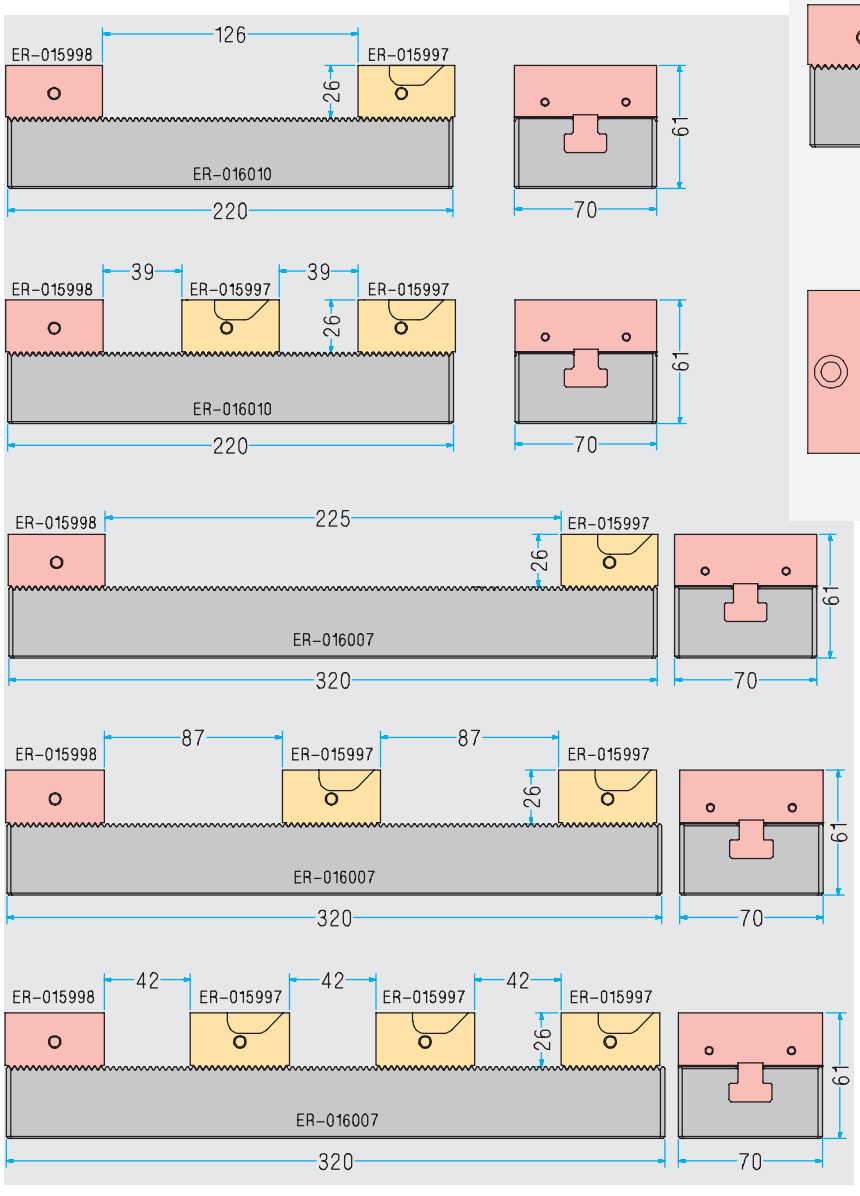

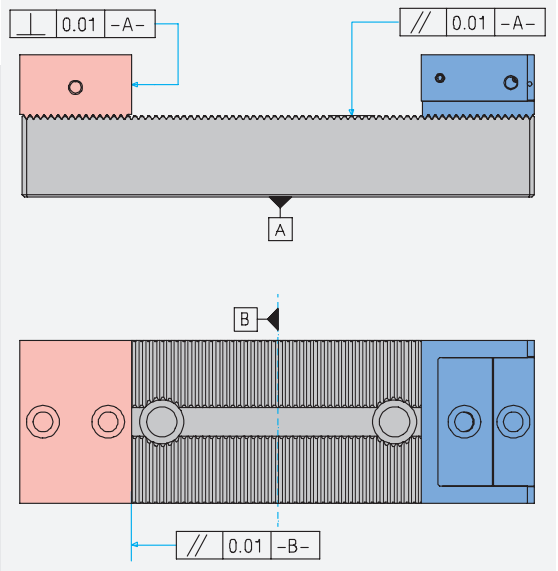

Position tolerances

Application ClampSet Slide / Jaw

ER-015995	ClampSet Slide
ER-023325	ClampSet Jaw
ER-015998	ClampSet Block F
ER-016010	ClampSet Base 220
ER-016007	ClampSet Base 320

	Clamping power in kg ±10% at a torque of			
	5 Nm	10 Nm	15 Nm	20 Nm
ClampSet Slide	250	500	750	1000
ClampSet Jaw	300	600	900	1200

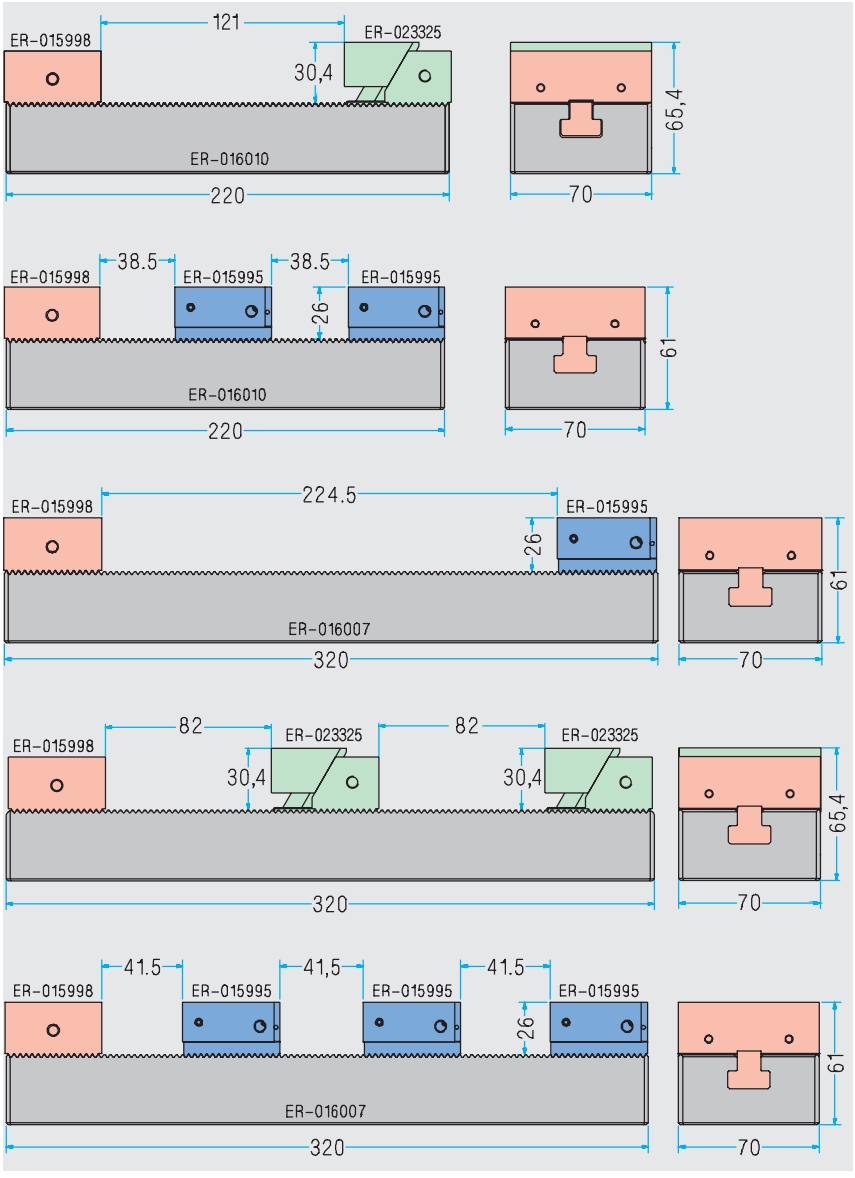

EROWA ClampSet

Base

ER-016010 ClampSet base 220

Version	Steel, hardened, ground. Clamping element carrier with 3 mm positioning grid.
Application	On ITS pallets 148 with 25 mm grid and on UPC pallets with 50 mm grid, as a base for the various ClampSet clamping jaws.
Mounting	On all EROWA grid pallets.
Note	R40 subject to consultation.

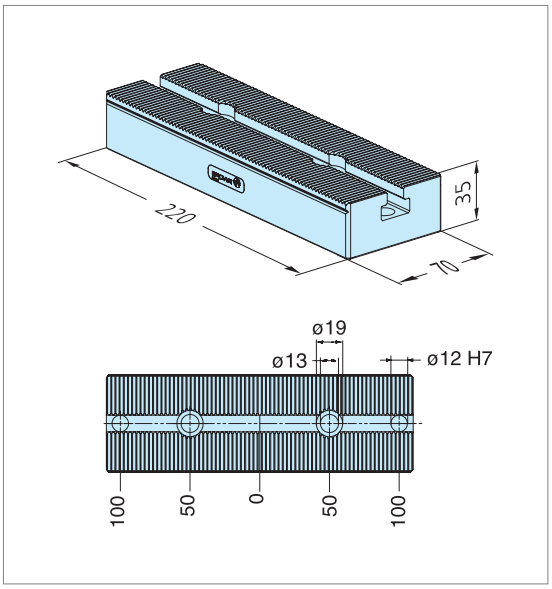

ER-016007 ClampSet base 320

Version	Steel, hardened, ground. Clamping element carrier with 3 mm positioning grid.
Application	On UPC grid pallets R50 or Cube R50, as a base for the various ClampSet clamping jaws.
Mounting	On EROWA UPC and MTS grid pallets R50 or Cube R50.
Note	R40 subject to consultation.

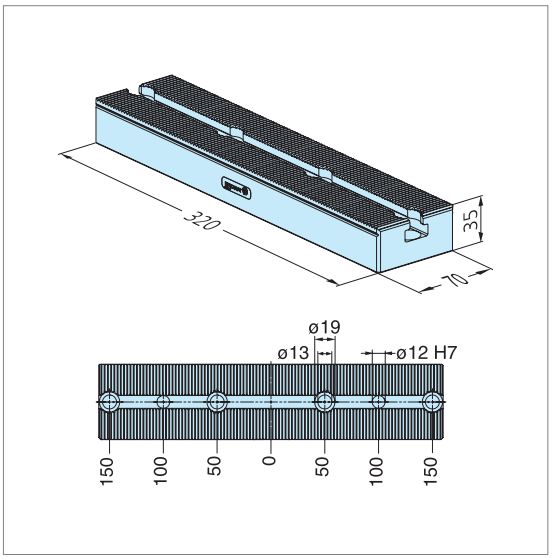

EROWA ClampSet

Clamping elements

ER-023325 ClampSet Jaw

Version	Steel, hardened, including tenon block for attachment.
Application	To clamp workpieces with machined surfaces.
Mounting	On ClampSet Base 320 or 220 with tenon block supplied.
Note	Favorably priced alternative to the Clamp Set Slide. The fixed stop side enables multiple fixtures.

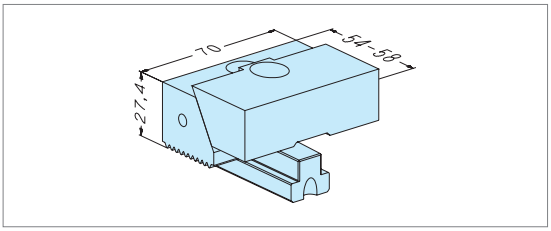

ER-015995 ClampSet Slide

Version	Steel, hardened, incl. T-nut for fixation.
Application	To clamp workpieces with machined sides.
Mounting	On ClampSet Base 320 or 220 with the T-nut supplied.
Note	Fixed stop side for the multiple fixture of machined workpieces. The precision clamping jaw in the ClampSet system.

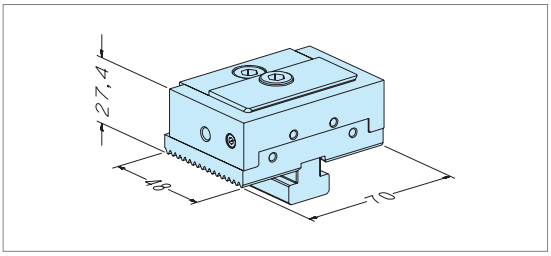

ER-015997 ClampSet standard block M8

Version	Steel, hardened, incl. T-nut for attachment.
Application	The blanks are clamped with the M8 stud bolts. A clamping jaw in EROWA´s modular vise system.
Mounting	On ClampSet Base 320 or 220 with the T-nut supplied.
Note	The fixed stop side allows for multiple fixtures.

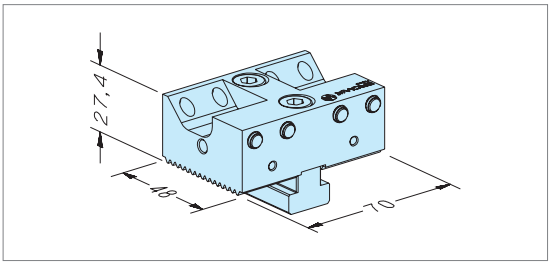

ER-015998 ClampSet block F

Version	Steel, hardened, incl. T-nut for attachment.
Application	Hard jaw in EROWA´s modular vise system.
Mounting	On ClampSet 320 or 220 with the T-nut supplied.

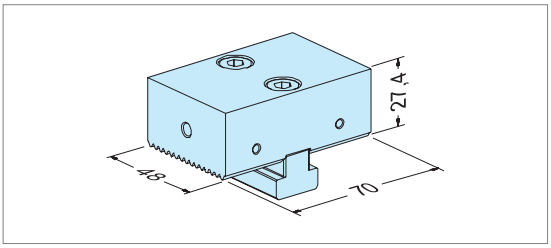

EROWA ClampSet

Clamping elements

ER-015999 ClampSet block S steel soft

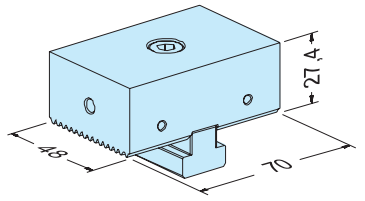

Version	Steel, soft, incl. T-nut for attachment.
Application	The soft block serves to produce a workpiece-specific hard jaw.
Mounting	On ClampSet 320 or 220 with the T-nut supplied.

ER-015996 ClampSet block N pull-down jaw

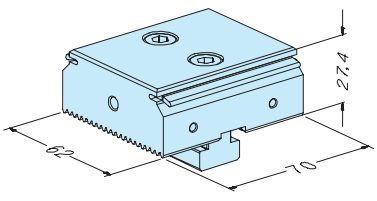

Version	Steel, hardened, incl. T-nut for attachment.
Application	To clamp blanks. Hard jaw in EROWA´s modular vise system.
Mounting	On ClampSet 320 or 220 with the T-nut supplied.
Note	Pull-down function when clamping.

ER-016001 ClampSet block Prisma

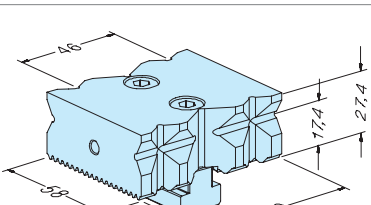

Version	Steel, hardened, incl. T-nut for attachment.
Application	To clamp round parts. Hard jaw in EROWA´s modular vise system.
Mounting	On ClampSet 320 or 220 with the T-nut supplied.

EROWA ClampSet

Auxiliary equipment

ER-099201 MillStop

Version	Adjustable steel stop.
Application	Lateral stop for ClampSet and CleverClamp clamping or stop element, as well as for blank vise 148.
To fit	Use bolts supplied to fit it laterally to the desired clamping or stop elements

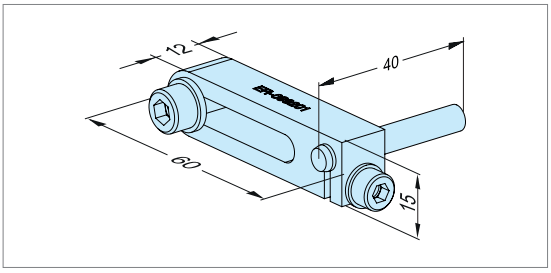

ER-015880 ClampSet Support N 1 pair

Version	Steel, hardened, ground, with bolts.
Application	Pull-down element for ClampSet Slide and ClampSet Block. To clamp workpieces of aluminum and non-ferrous heavy metal.
Mounting	To ClampSet Slide and ClampSet Block with the bolts supplied.
Note	Also suitable for clamping workpieces of low height.

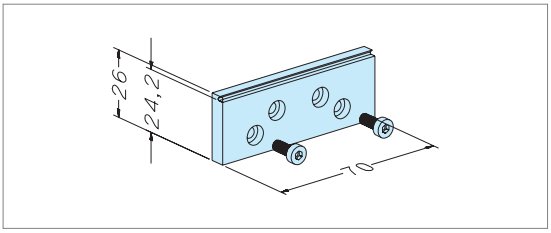

ER-015888 ClampSet Support Kit 7 parts, grinded supports

Version	Set of 7 ground supports; 12, 14, 16, 18, 20, 22 and 24 mm high; with bolts.
Application	Supports for the height positioning of workpieces.
Mounting	To the various ClampSet Blocks with the bolts supplied.

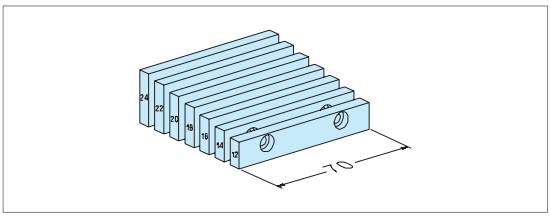

ER-016274 ClampSet support kit 7 parts, stepped

Version	Set of 7 ground, offset supports, with bolts.
Application	Supports for the height positioning of workpieces.
Mounting	To ClampSet Slide with the bolts supplied.

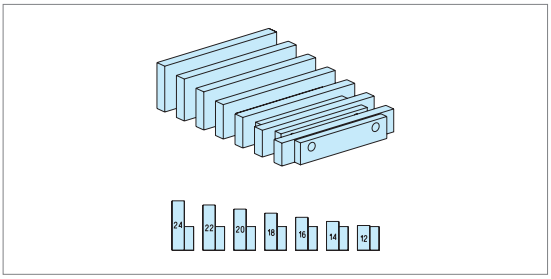

ER-024681 ClampSet support kit set grinded supports

Version	Set of 8 ground supports, heights 10, 14, 18 and 22 mm.
Application	Support for the height positioning of workpieces.
Mounting	The supports are clamped on the base from above.

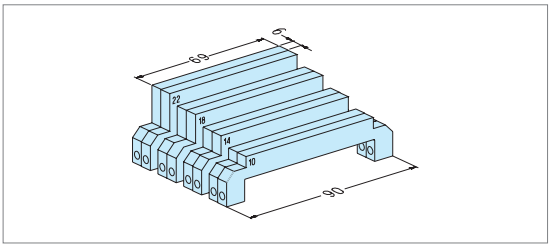

EROWA ITS chuck

The versatile tooling system for the entire production chain

EROWA's ITS chuck operates on a principle that is as simple as it is ingenious. It holds both tools and workpieces with equal precision and with a high degree of repeatability. Its applications are so numerous that it forms the basis for a well thought-out modular tooling system.

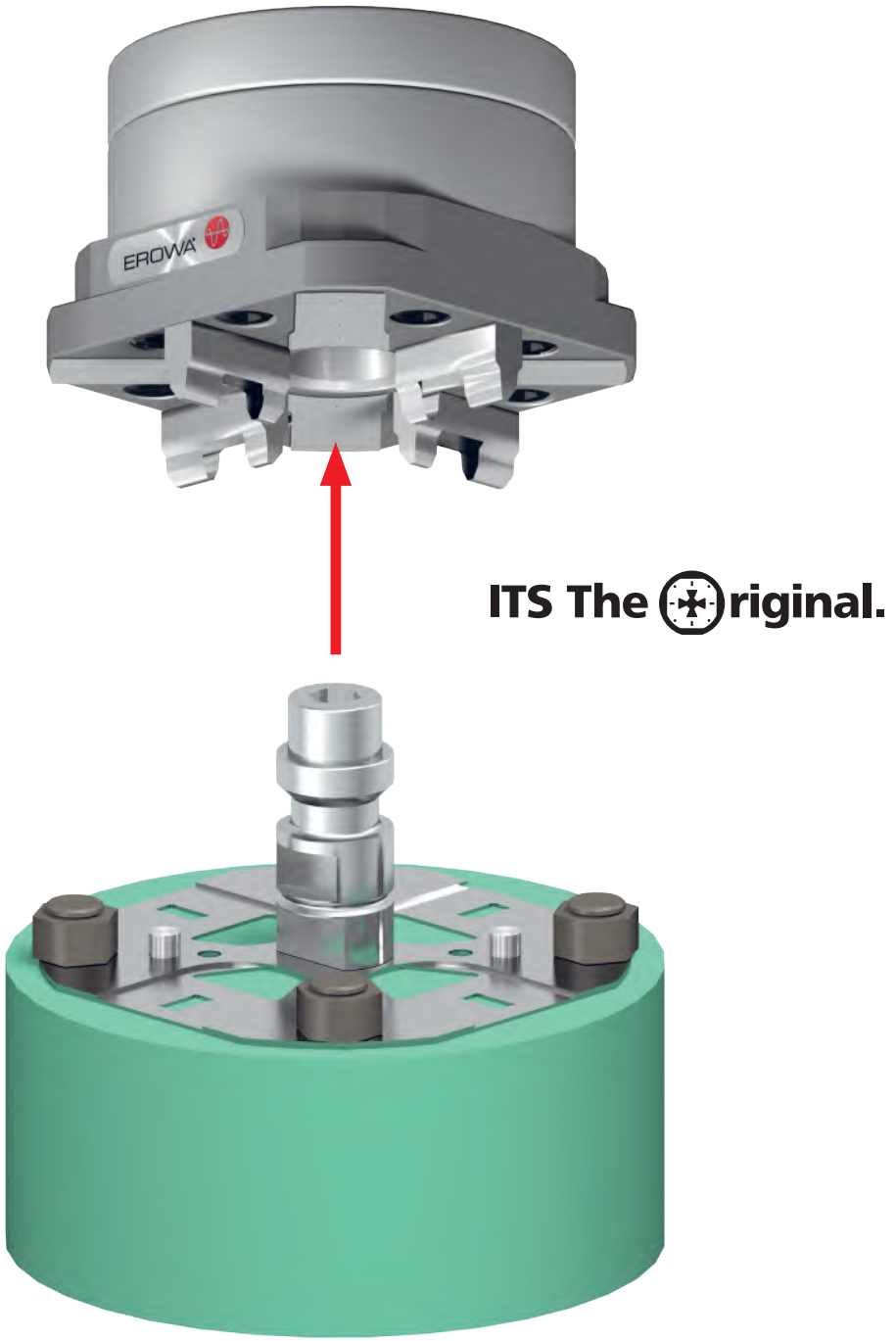

Applications

Handling

Manual / Loading facility / Robot

Function

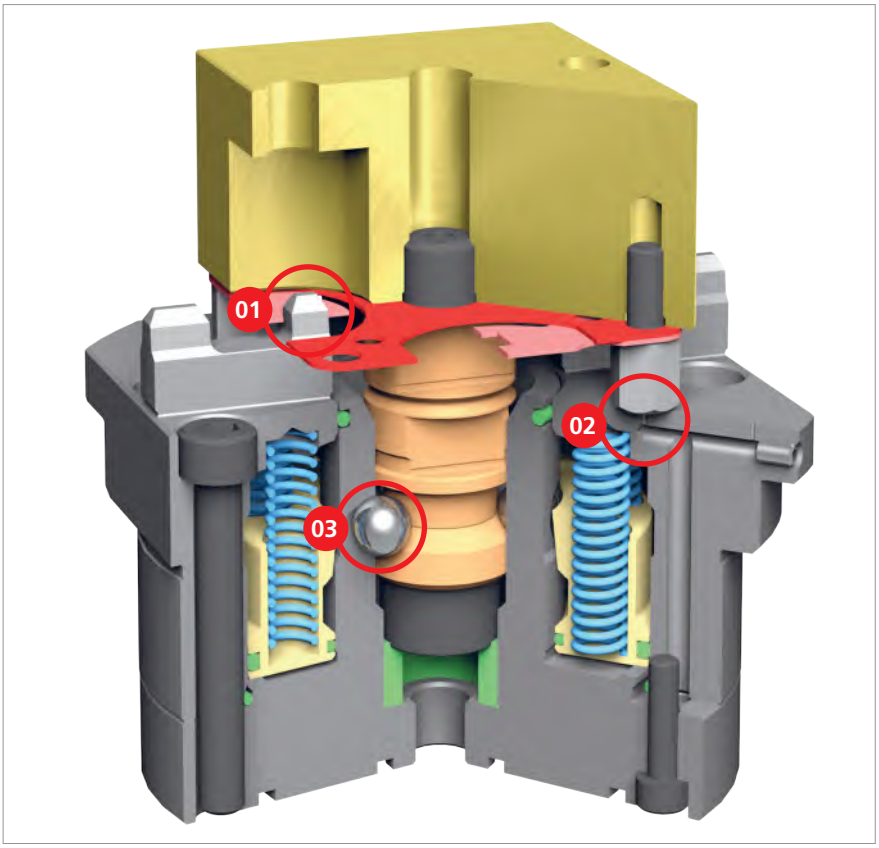

01 | Precision
The important effect: the deflecting plate wipes off the dirt. The centering plate and the prism only touch on one line. In this way, a wide variety of EROWA workpiece carriers are clamped with the highest degree of precision and positioning.

02 | Cleaning
The support surfaces of the supporting feet are cleaned during the clamping process. This also works when the chuck is submerged in liquid.

03 | Ball-lock
The reliable clamping mechanism with self-locking ball lock: it generates a clamping power of up to 7,000N and does not unlock in the event of a pressure failure.

Technical data - ITS chuck

	ITS chuck, pneumatic
System sizes	50 and 100
Repeatability	< 0.002 mm
Indexing	4 x 90°
Clamping power	2,500 N - 7,000 N
Recommended workpiece sizes	up to 140 x 140 x 140 mm
Clamping	with spring tension (clamped without pressure)
Opening pressure	min. 6 bar (pneumatic)
Operation	with control unit or compressed-air gun

EROWA ITS chuck in action

A suitable version for each job

The applications of ITS chucks are as numerous as the jobs to be done in precision mechanics and in tool and mold manufacturing. This is why we offer such a diverse variety of chucks.

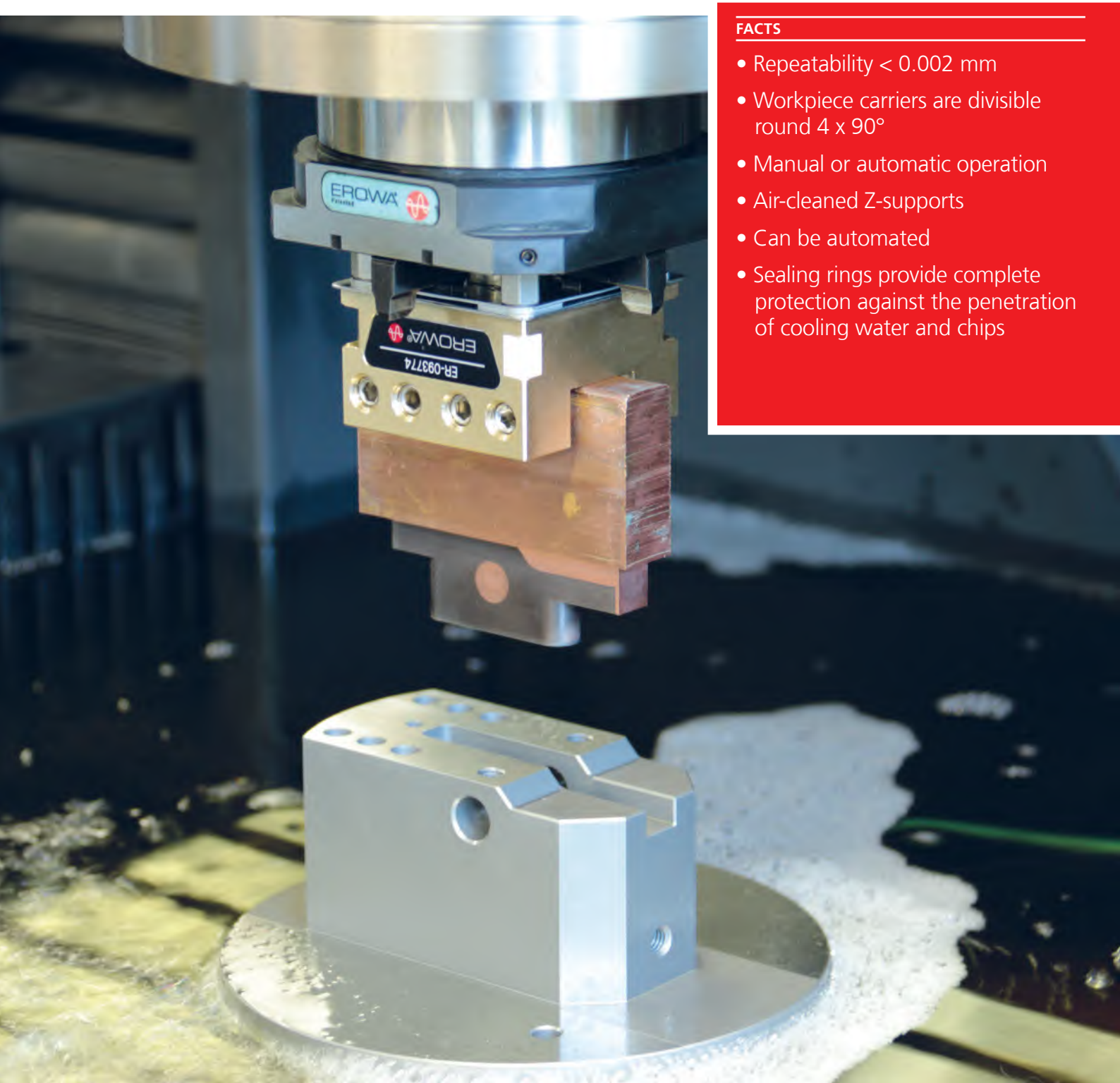

FACTS

- Repeatability < 0.002 mm
- Workpiece carriers are divisible round 4 x 90°
- Manual or automatic operation
- Air-cleaned Z-supports
- Can be automated
- Sealing rings provide complete protection against the penetration of cooling water and chips

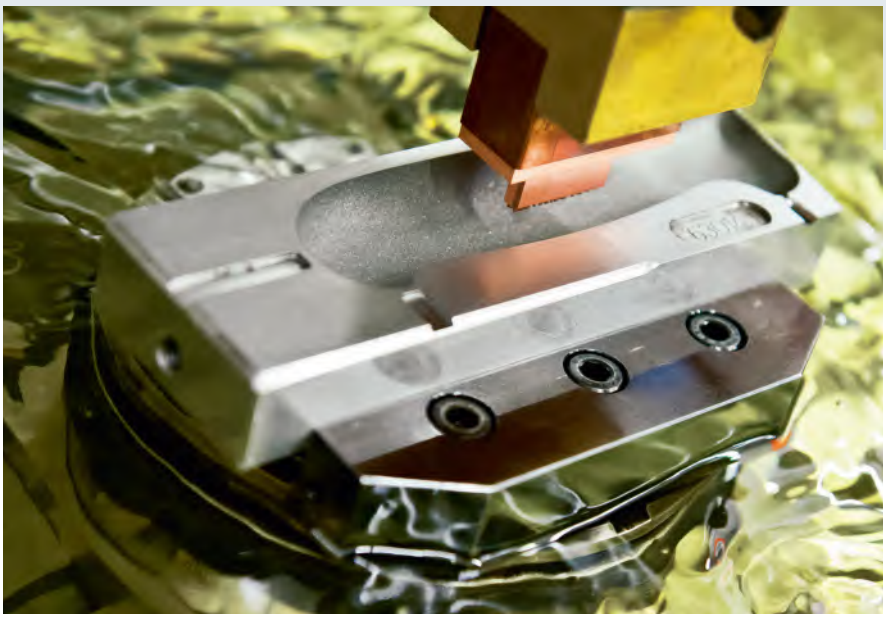

Precision and reliability in the machine tank and at the quill of the EDM center. The workpiece holders are divisible 4 x 90°. The repeatability of 0.002 mm guarantees universal and precise positioning.



EROWA's ITS chucks can be universally employed on all machines.

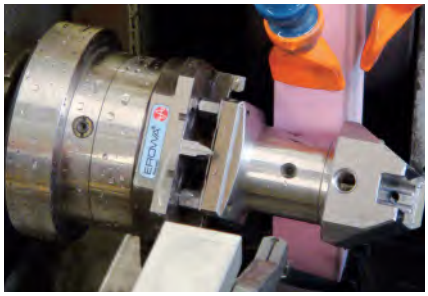

The workpieces/electrodes are palletized on the same system carrier throughout their progress through the entire production chain (turning, milling, grinding, EDM, WEDM and measuring and presetting stations).



EROWA set-up and presetting station with integrated ITS chuck.



Resetting without any loss of time thanks to a fixed reference position: the chucking spigot and the centering plate guarantee precise positioning and powerful clamping of the electrode holder.



The sealing plate of the EROWA ITS 50 holder C and the sealing ring provide a form-fit seal. This ensures that the chuck is optimally protected against contamination and the penetration of liquids.

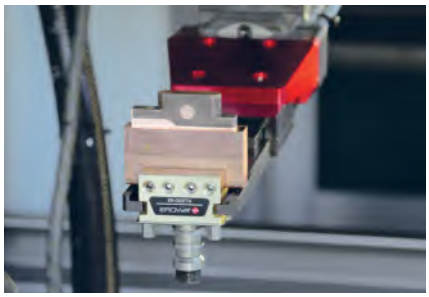

Use marginal and night hours by loading/unloading the EDM center automatically. The entire EDM tooling system can be automated. A wide range of EROWA loading stations provides a suitable solution for every application.

EROWA ITS

The components

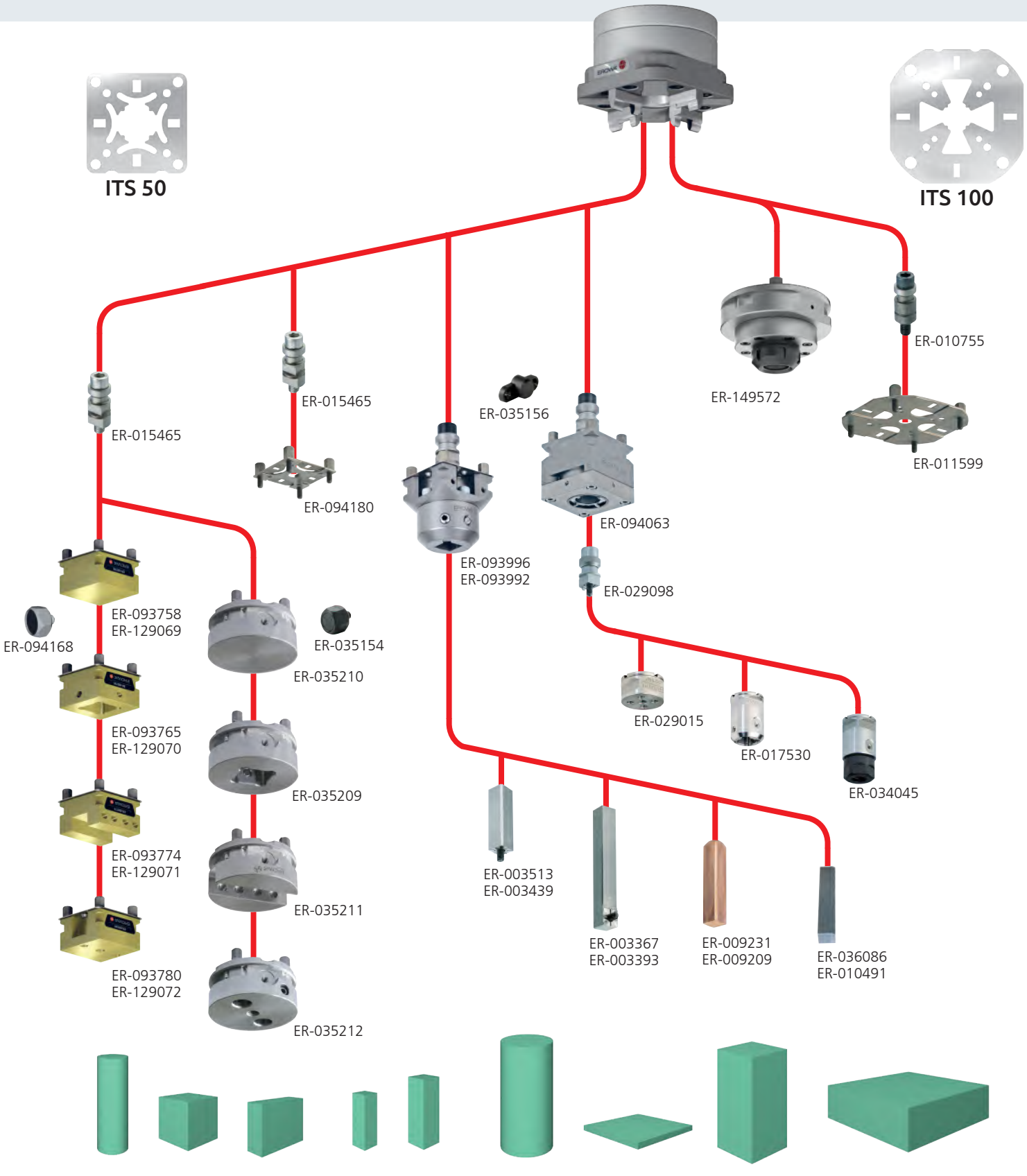

To make it easier for you to find your way about the fields of application for EROWA products, we use the following symbols in all our documents:

1. Manual operation
2. Operate with compressed air jet
3. Operate with manual valve
4. Operate with manual control unit
5. Operate with electro-pneumatic control unit
6. With central flushing clearance
7. Suited for submerged operation
8. Corrosion-resistant material
9. Suited for automatic operation
10. Handling with EROWA Robot gripper S
11. Handling with EROWA Robot gripper Combi
12. Handling with EROWA Robot gripper C
13. Handling with EROWA Robot gripper 72
14. Handling with EROWA Robot gripper 115
15. Handling with EROWA Robot gripper 148
16. Handling with EROWA Robot gripper RN PC 210
17. Handling with EROWA Robot gripper RCS
18. Handling with EROWA Robot gripper WGS-500

EROWA ITS

EROWA ITS chucks	
ITS chucks - a survey	202
ITS chuck, pneumatic, quill, able to automate	204
ITS chuck, pneumatic, quill, manual / quill, mechanical	205
ITS chuck, pneumatic, table, able to automate	206
ITS chuck, pneumatic, table, manual	207
ITS chuck, pneumatic, table, able to automate, INOX	209
ITS chuck, manual, table, INOX	211
ITS screw chuck, manual	211
ITS chuck accessories	212
EROWA ITS workpiece carriers	216
ITS centering plates	218
ITS holder C / standard electrode holders	220
ITS Holder ø 72	224
EROWA ITS chucking spigots	226
EROWA ITS square electrode system and System Plus	228
Square electrode clamping system 15/System Plus	230
Square electrode clamping system 25/System Plus	234
EROWA ITS special electrode holders	238
EROWA ITS measuring and controlling components	244
EROWA ITS element set	248
EROWA ITS auxiliary equipment	278
Chuck operation	278
Toolroom accessories	280
Spare parts	283

For chip-removing processes

For EDM sinking

For WEDM

EROWA ITS

Chucks

ITS Chucks: Pneumatically activated


ER-001846


ER-070445


ER-157411

Quill chucks




ER-007523


ER-007521


ER-007580

Table chucks




ER-155100


ER-155102

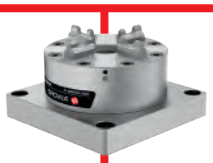
ER-155118


ER-007604

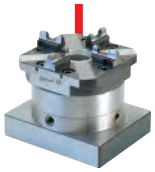
ER-012299


ER-155250


ER-012297


ER-007612

Corrosion-resistant table chucks




ER-155200


ER-155202


ER-155885


ER-155218


ER-048519

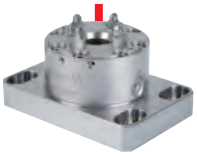
ER-055294


ER-011803


ER-008186

ITS Chucks: Mechanically activated

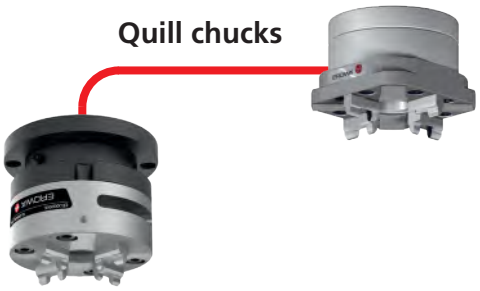

ER-154473

ITS - THE ORIGINAL

Tens of thousands in successful operation and patented worldwide since 1984.

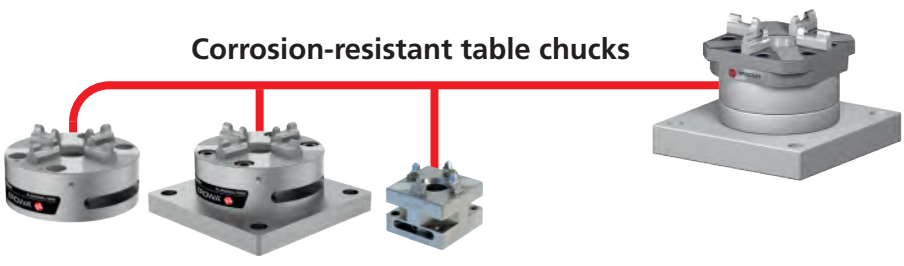

ER-150800 ER-154100 ER-034387

EROWA ITS chucks

pneumatic, quill, able to automate

Technical data	Chuck	Chuck «NSF» (with reclamping)
Repeatability	< 0.002 mm	< 0.002 mm
Indexing	4 x 90°	4 x 90°
Clamping	with spring tension (clamped without pressure)	
Opening pressure (pneumatic)	min. 6 bar	min. 6 bar
Reclamping pressure (pneumatic)		min. 6 bar

ER-007521 Rapid-action chuck automatic





Version	Standard type. Clamping power up to 2500 N.
Connections	On back.
Application	EDM sinking machines with automatic electrode change, machine tools with automatic loading, production lines.

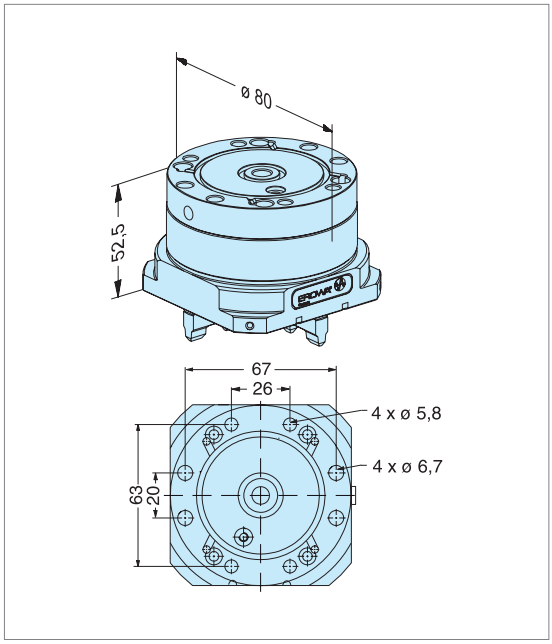

ER-007523 Rapid-action chuck automatic with shoulder for flushing





Version	Shoulder for flushing connection. Clamping power up to 2500 N.
Connections	On back.
Application	EDM sinking machines with automatic electrode change.

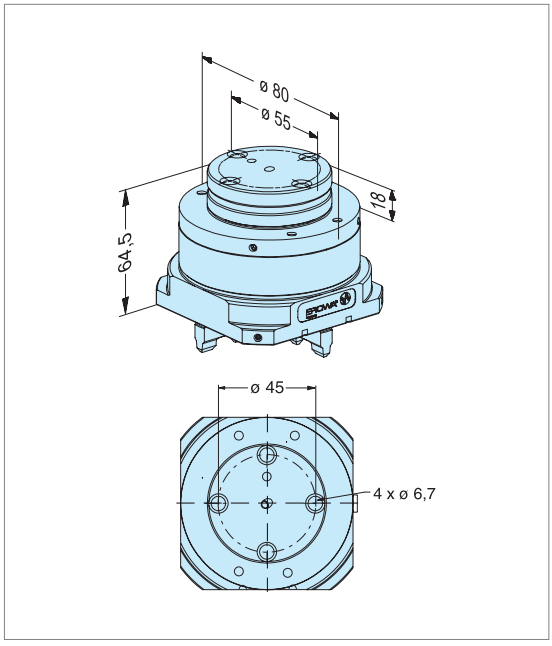

EROWA ITS chucks

pneumatic, quill, manual

ER-007580 Manual rapid-action chuck

Version	With flange ø 110 mm. Clamping power up to 2500 N.
Connections	Hose coupling fitting on side.
Application	Retrofitting on EDM sinking machines.

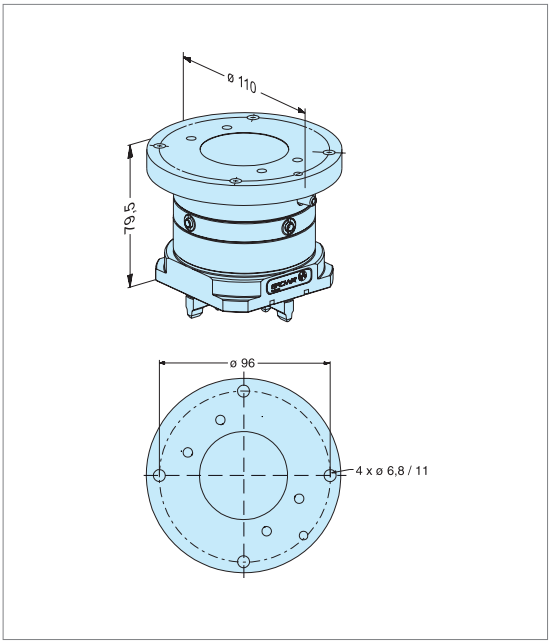

EROWA ITS chucks

mechanical, quill

Technical data	ITS chuck, mechanical
Repeatability	< 0.002 mm
Indexation	4 x 90°
Operation	manually with clamping lever

ER-154473 QuickChuck 100 P / R

Version	Manual operation. With base plate ø 110 mm and rotatable flushing connection.
Clamping power	Up to 10,000N.
Application	To accommodate electrode holders and pallets ø 115 / ø 148 / PM56 / PM60 und PM85 Precise. For machining processes on EDM centers with quill rotation.
Please note	Max. speed 70min-¹.

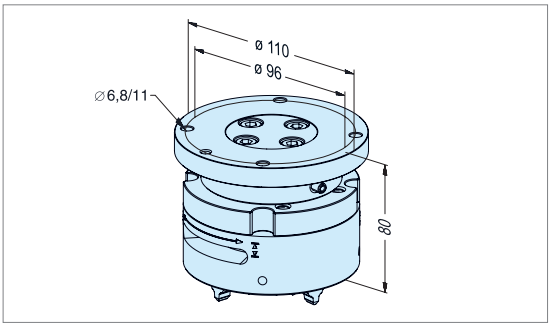

EROWA ITS chucks

pneumatic, table, able to automate

ER-155100 ITS Chuck 100 P without Base plate

Version	ITS chuck with P-profile. Clamping power: 6,000N.
Connections	At the rear through the interfaces according to the operating manual.
Operation	With control unit.
Application	For use on milling, turning, grinding and EDM machines. To clamp ITS electrode holders, ø115 / ø148 / PM56 / PM60 / PM85 Precise pallets.

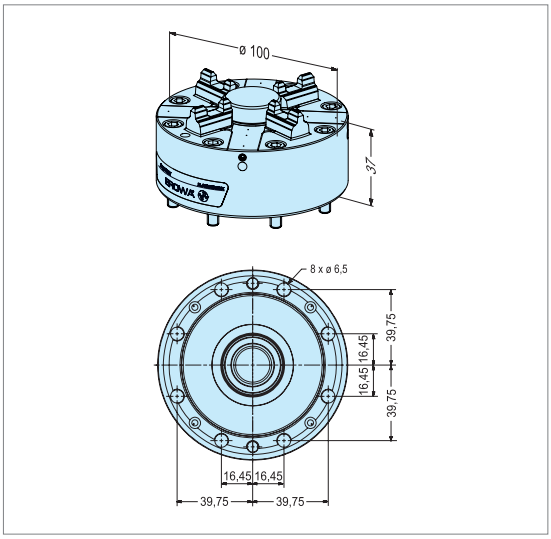

ER-155102 ITS Chuck 100 P 102 x 102

Version	ITS chuck with P-profile, including 102x102mm base plate. Clamping power: 6,000N.
Connections	Laterally or at the rear with two lines.
Operation	Laterally with air gun. With a control unit, through the two connections laterally or at the rear.
Application	For use on milliing, grinding and EMD machines. To clamp ITS electrode holders, ø 115 / ø 148 / PM56 / PM60 / PM85 Precise pallets.

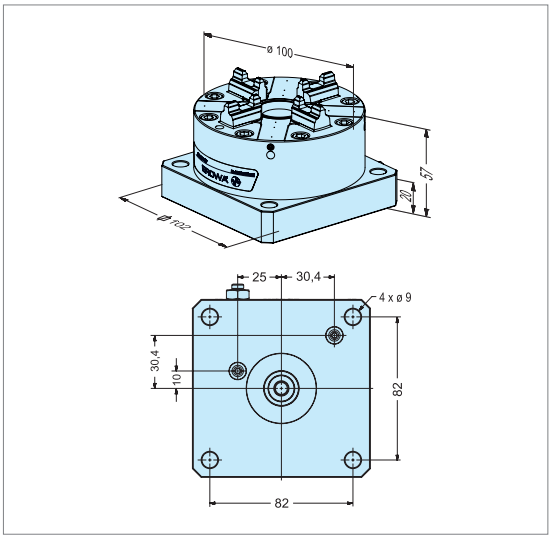

ER-155118 ITS Chuck 100 P 118 x 118

Version	ITS chuck with P-profile, including 118x118mm base plate. Clamping power: 6,000N.
Connections	Laterally or at the rear with two lines.
Operation	Laterally with air gun. With a control unit through the two connections laterally or at the reare.
Application	For use on milling, grinding and EDM machines. To clamp ITS electrode holders, ø 115 / ø 148 / PM56 / PM60 / PM85 Precise pallets.

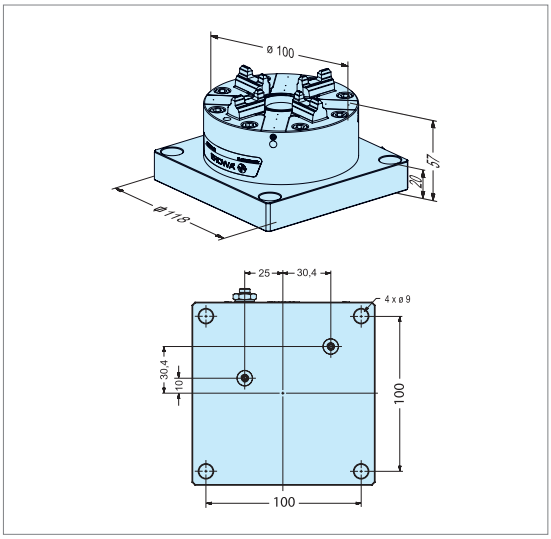

EROWA ITS chucks

pneumatic, table, manual

ER-155250 ITS Chuck 100 P ø 100

Version	ITS chuck with P-profile, including ø100mm base plate. Clamping power; 6,000N.
Connections	Laterally with one line.
Operation	Laterally with air gun.
Application	For use on milling, turning, grinding and EDM machines. To clamp ITS electrode holders, ø 115 / ø 148 / PM56 / PM60 / PM85 Precise pallets.

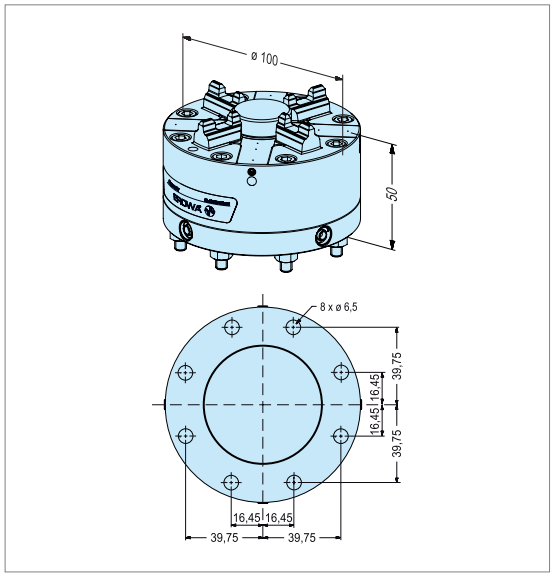

ER-155885 ITS Chuck 100 P Inox ø 100

Version	ITS chuck with P-profile, including ø100mm base plate. Inox version with 5,000N clamping power.
Connections	Laterally through one line.
Operation	Laterally with air gun.
Application	Fore use on turning, milling, grinding, EDM and WEDM machines. To accommodate electrode holderes, ø 115 / ø 148 / PM56 / PM60 / PM85 Precise pallets.

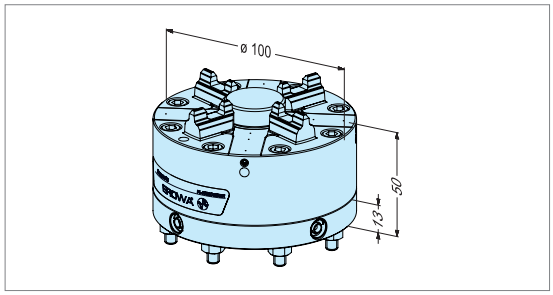

ER-007604 Manual rapid-action chuck NSF

Version	NSF = increased clamping power up to 7000 N.
Connections	Pneumatic valves on side, flushing on back.
Application	Electrode fabrication general.
Note	To clamp pallets of ø 115 / ø 148, ø 72 and electrode holder 50. Pallets with P centering system are excluded.

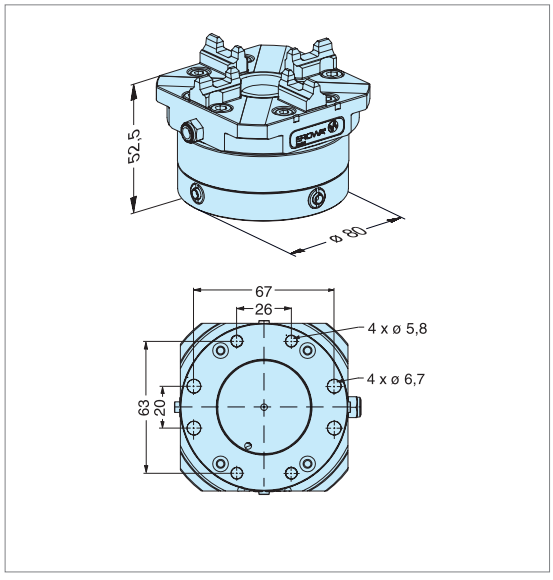

EROWA ITS chucks

pneumatic, table, manual

ER-012299 Rapid-action chuck NSF on plate

Version	NSF = increased clamping power up to 7000 N.
Connections	Pneumatic valves on side.
Application	Electrode fabrication, e.g. on magnetic plate.
Note	To hold pallets ø 115 / ø 148, electrode holders, with the exception of pallets with a P-profile.

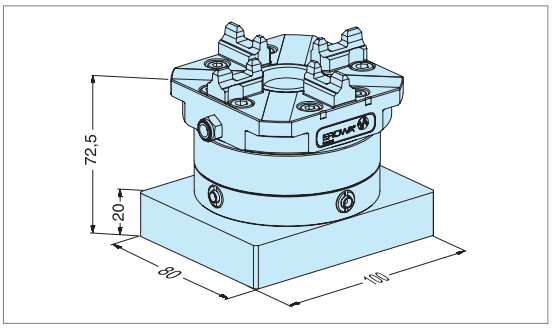

ER-012297 Rapid-action chuck NSF on block

Version	NSF = increased clamping power up to 7000 N.
Connections	Pneumatic valves on side.
Application	Electrode fabrication. For use in horizontal and vertical positions.
Note	To hold pallets ø 115 / ø 148, electrode holders, with the exception of pallets with a P-profile.

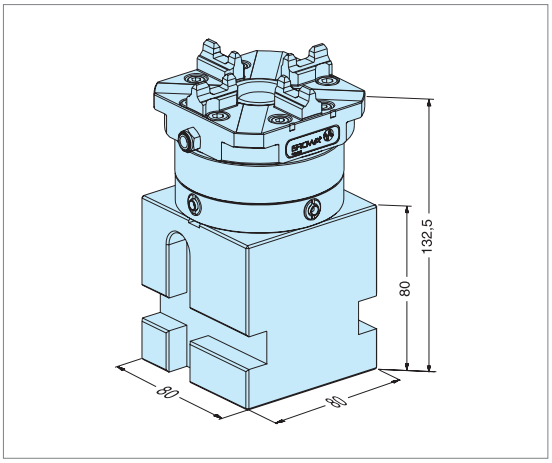

ER-007612 Rapid-action chuck NSF on angle plate

Version	Standard type on type G angle plate. NFS = increased clamping power up to 7000 N.
Connections	Pneumatic valves on the side, flushing through chucking spigot.
Application	To produce electrodes, and on EDM quill.
Note	To hold pallets ø 115 / ø 148, electrode holders, with the exception of pallets with a P-profile.

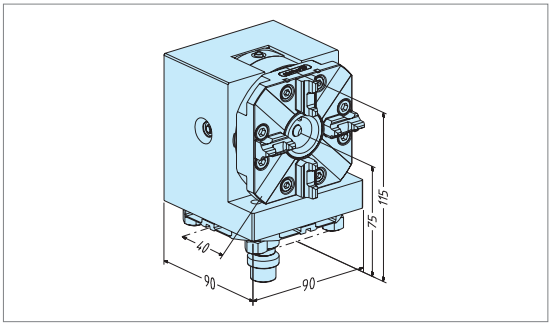

EROWA ITS chucks

pneumatic, table, able to automate, INOX

ER-155200 ITS Chuck 100 P Inox without Base plate

Application	ITS chuck with P-profile. Inox version with 5,000N clamping power.
Connections	At the rear through the interfaces according to the operating manual.
Operation	With control unit.
Application	For use on milling, turning, grinding, EDM and WEDM machines. To clamp ITS electrode holders, ø 115 / ø 148 / PM56 / PM60 / PM85 Precise pallets.

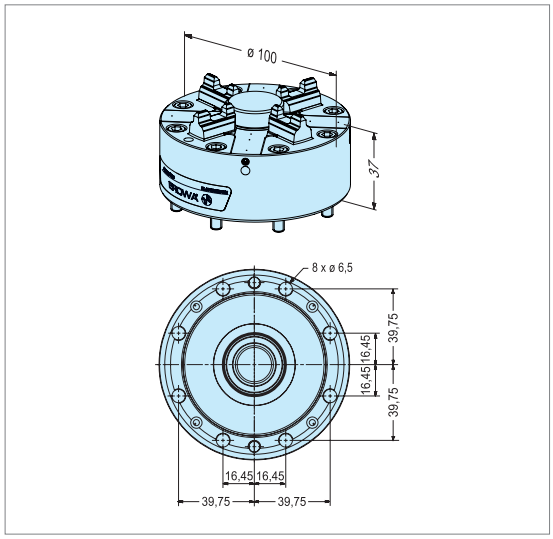

ER-155202 ITS Chuck 100 P Inox 102 x 102

Version	ITS chuck with P-profile, including 102x102mm base plate. Inox version witeh 5,000N clamping power.
Connections	Laterally or at the rear with two lines.
Operation	Laterally with air gun. With a control unit through the two connections laterally or at the rear.
Application	For use on milling, grinding, EDM and WEDM machines. To accommodate electrode holders, ø 115 / ø 148 / PM56 / PM60 / PM85 Precise palleets.

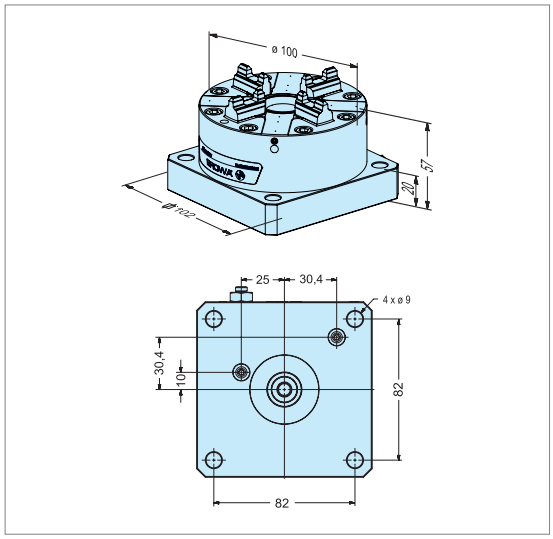

ER-155218 ITS Chuck 100 P Inox 118 x 118

Version	ITS chuck with P-profile, including 118x118mm base plate. Inox version with 5,000N clamping power.
Connections	Laterally or at the rear with two lines.
Operation	Laterally with air gun. With a control unit through the two connections laterally or at the rear.
Application	For use on milling, gdrinding, EDM and WEDM machines. To accommodate electrode holders, ø 115 / ø 148 / PM56 / PM60 / PM85 Precise pallets.

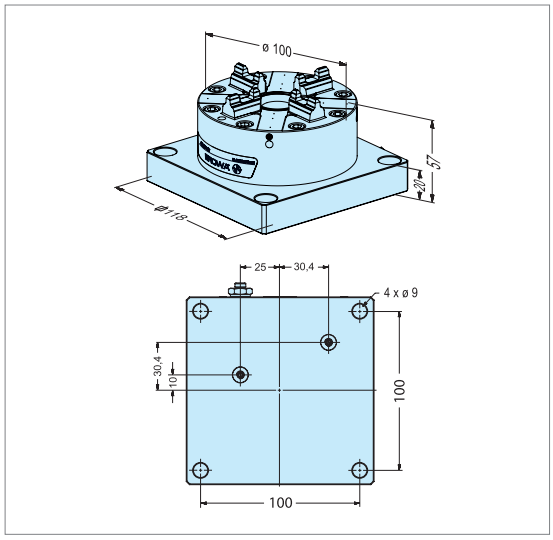

EROWA ITS chucks

pneumatic, table, able to automate, INOX

ER-048519 ITS chuck 50 Inox

Version	System size 50, corrosion-resistant.
Clamping power	2800 N.
To be fitted	With 8 M5 bolts from the front.
Application	For fixtures produced by users themselves.
Note	Chuck can be operated manually or automatically. Air connections laterally or at the rear.

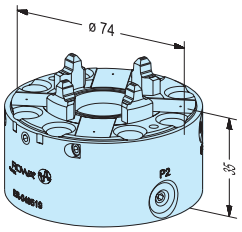

ER-055294 ITS Chuck 50 Inox with base plate 80 x 120

Version	System size 50, corrosion-resistant.
Clamping power	2800 N.
Attachment	With 4xM8 bolts from the front.
Application	On milling and grinding machines and on EDM/WEDM centers.
Note	Chuck can be operated manually or automatically. Pneumatic connections on the side of the chuck.

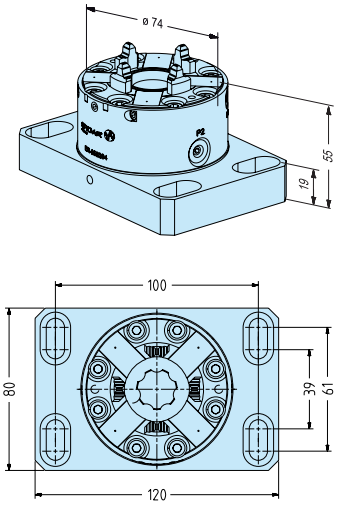

ER-011803 Chuck 50 RSA without base plate

Version	Chuck 50 RSA, automatic with pneumatic valve.
Clamping power	2800 N.
Attachment	With 4 M6 bolts from the rear.
Application	ITS basis for the manual loading of ITS elements or for automatic operation.

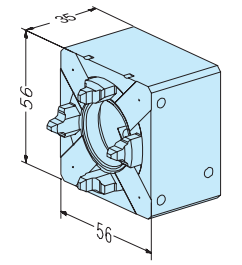

ER-008186 Chuck 50 RSA with base plate 10 x 55.5 x 85

Version	Chuck 50 RSA, automatic, with pneumatic connection.
Clamping power	2800 N.
Application	ITS basis for the manual loading of ITS elements or for automatic operation.

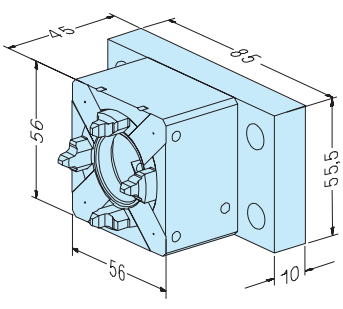

EROWA ITS chucks

manual, table, INOX

ER-034387 QuickChuck 50

INOX

Version	System size 50, manual, rust-resistant.
Attachment	4 x M8 from the rear or 4 x M6 stud bolts with nuts.
Application	On EDM/WEDM centers for light milling and grinding work. Max. revolutions on rotating axes 2000 rpm.
Note	Clamping power up to 4000 N.

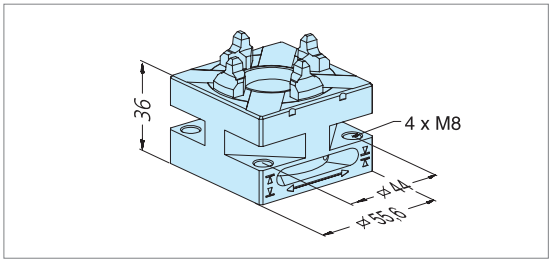

ER-150800 QuickChuck 100 P without base plate

INOX

Version	Manual operation. Steel, rust-resistant. Without base plate.
Clamping power	Up to 10,000N.
Application	To accommodate electrode holders and pallets ø115 / ø148 / PM56 / PM60 und PM85 Precise. For machining processes on lathes, milling and grinding machines and EDM/WEDM centers.
Please note	Max. speed 3,000min-¹.

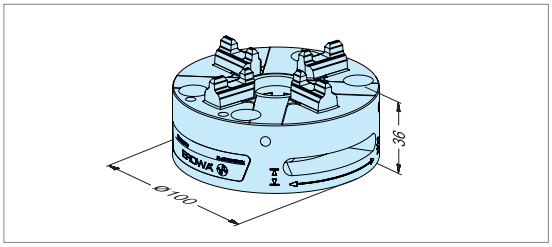

ER-154100 QuickChuck 100 P 125 x 125

INOX

Version	Manual operation. Steel, rust-resistant. With base plate 125x125mm.
Clamping power	Up to 10,000N.
Application	To accommodate electrode holders and pallets ø115 / ø148 / PM56 / PM60 und PM85 Precise. For machining processes on milling and grinding machines and EDM/WEDM centers.

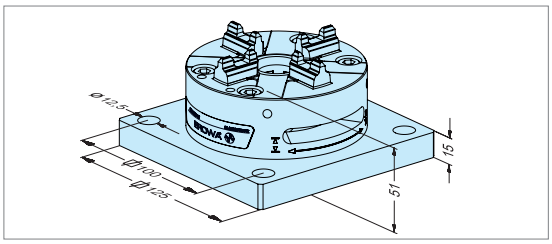

ITS

EROWA ITS chucks

ITS screw chucks, manual

Technical data	ITS screw chuck, manual
Repeatability	0.002 mm
Indexing	4 x 90°
Operation/clamping	manually with locking bolt

ER-007697 Screw chuck 50 D

Version	Only 20 mm overall height. For holders of system size 50.
Connections	Central flushing possible.
Application	Small lathes, on tapers, flanges, jigs and fixtures.

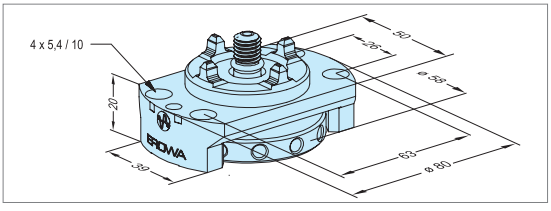

EROWA ITS chucks

Accessories

ER-019424 Universal square block

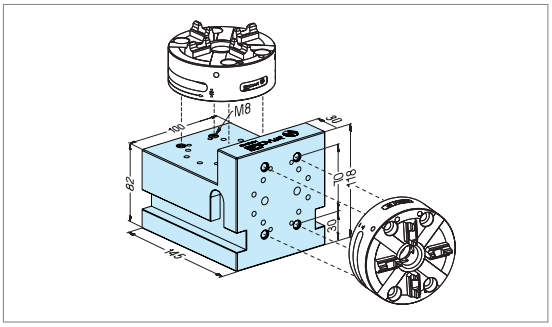

Version Steel, hardened, corrosion-resistant.
Application For attaching 1 or 2 chucks in horizontal and/or vertical position. Fits ITS chucks, QuickChuck 50, QuickChuck 100.
Note Delivery without chucks.

ER-032832 Sealing ring ITS chuck 50

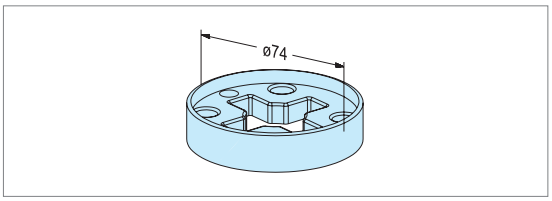

Version Plastic.
Application Prevents penetration of chips and dirt into the ITS Chuck 50 by application of EROWA Holders ø 72.

ER-034665 Cover ITS chuck 50

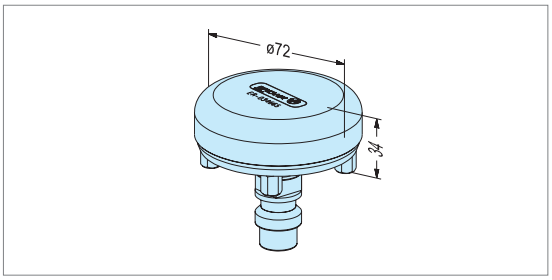

Version Aluminium anodized. Without centering plate.
Application Prevents penetration of chips and dirt into the ITS Chuck 50 in combination with the seal ring ER-032832.

ER-094955 Sealing ring ITS 50 C for chuck 50

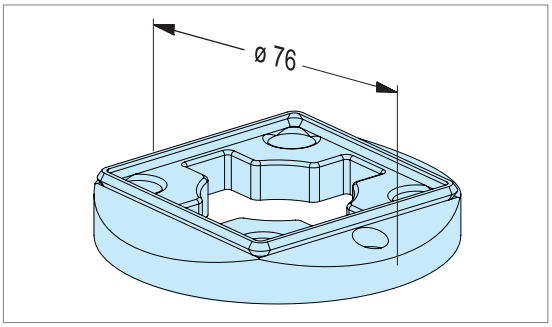

Version Plastic.
Application Prevents penetration of chips and dirt into the ITS Chuck 50 with application of EROWA HoldersITS50 C.

ER-094152 Sealing ring ITS50 C to QuickChuck 100 P / ITS Chuck 100 P

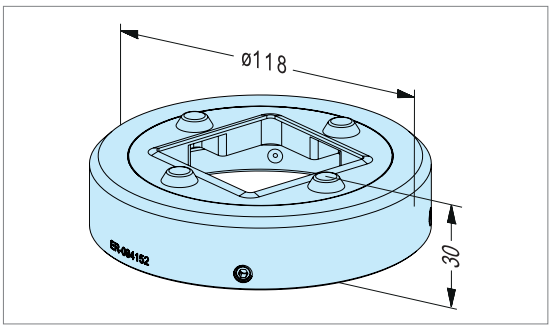

Version Aluminium anodized.
Application Prevents penetration of chips and dirt into the QuickChuck 100 P or ITS chuck 100 P by application of EROWA
electrode holders C.

ER-034735 Seal Rapid Action Chuck / ø 72

Version Aluminium anodized.
Application Prevents penetration of chips and dirt into the rapid action chuck by application of EROWA Holders ø 72.

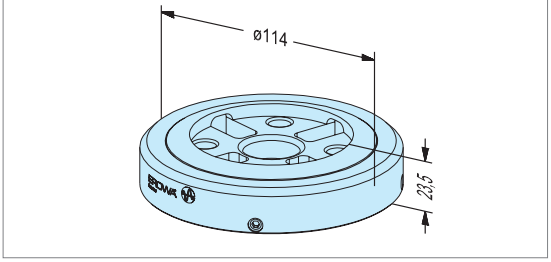

ER-035356 Sealing ring ø 72 to QuickChuck 100 P / ITS Chuck 100 P

Version Aluminium anodized.
Application Prevents penetration of chips and dirt into the QuickChuck 100 P or ITS chuck 100 P by application of EROWA
Holders ø 72.

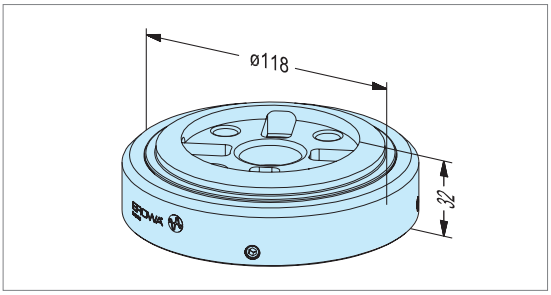

ER-094112 Sealing ring ITS50 C for SSF manual

Version Aluminium anodized.
Application Prevents penetration of chips and dirt into the rapid action chuck during machining of EROWA electrode holders C.

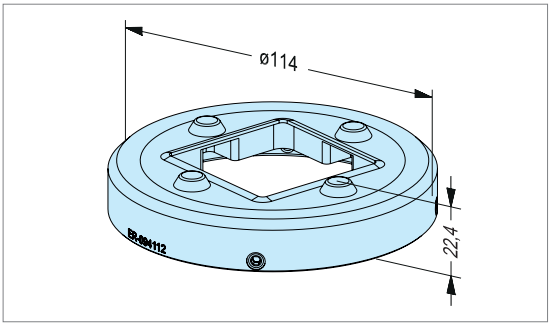

ER-046046 Sealing ring ø 115 to QuickChuck 100 P / ITS Chuck 100 P

Version Aluminum, for pallets ø 115 mm.
Application Seals QuickChuck 100 P / ITS Chuck 100 P in use with pallets ø 115 mm against liquid and chips. Can be combined with ER-029313.

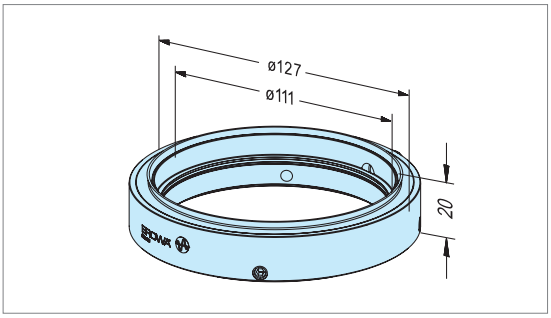

ER-046044 Sealing ring ø 148 for QuickChuck 100 P / ITS Chuck 100 P

Version Aluminum, for pallets ø 148 mm.
Application Seals QuickChuck 100 P / ITS Chuck 100 P in use with pallets ø 148 mm against liquid and chips. Can be combined with ER-029313.

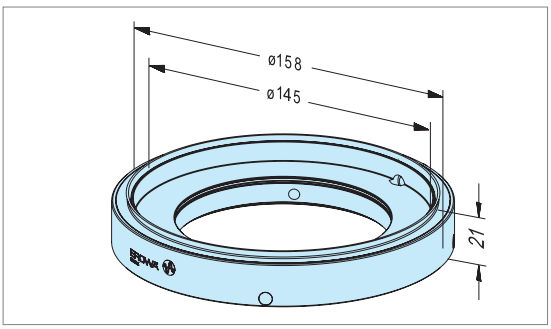

EROWA ITS chucks

Accessories

ER-029313 Chip guard for QuickChuck 100 P

Version Aluminum.
Application Seals the locking mechanism of the QuickChuck 100 P against the penetration of liquids and chips.

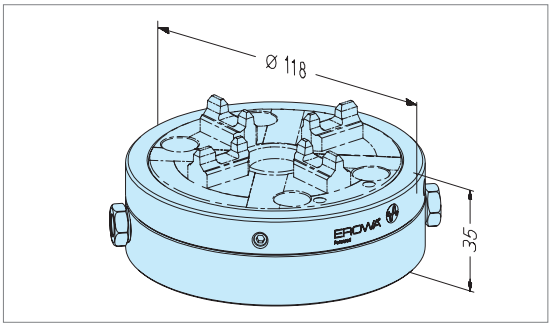

ER-007618 Cover for rapid-action chuck

Version Aluminum, without supports and centering plate.
Application To protect rapid-action chucks against dirt.

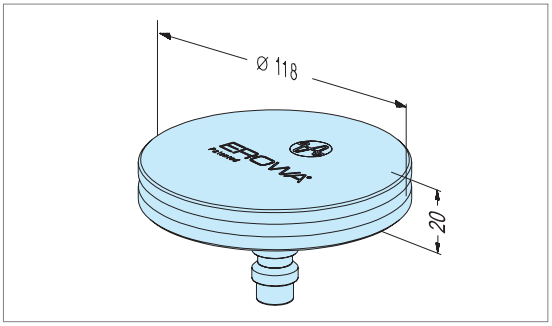

ER-041374 Sealing ring PM56 to QuickChuck 100 P / ITS Chuck 100 P

Version Aluminum, for pallets PM56.
Application Prevents dirt from penetrating into ITS chuck 100 P.

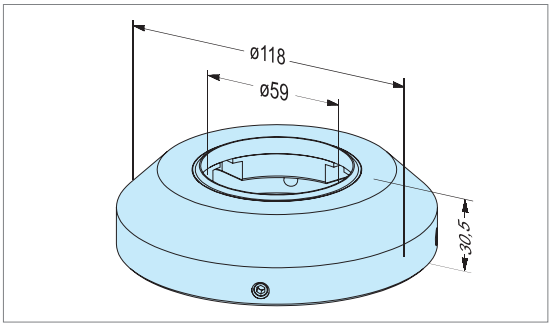

ER-034677 Sealing ring PM85 to QuickChuck 100 P / ITS Chuck 100 P

Version Aluminum, for pallets PM85.
Application Prevents dirt from penetrating into ITS chuck 100 P.

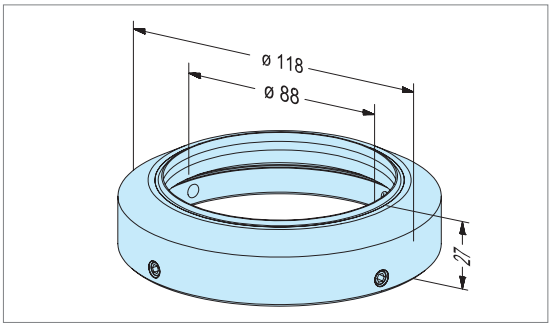

ITS

EROWA ITS workpiece carriers

The components

Interchangeability starts with the workpiece carrier. Whether you use EROWA electrode holders, pallets or centering plates to be directly fitted to workpieces depends on the application. System interchangeability is guaranteed anyway.

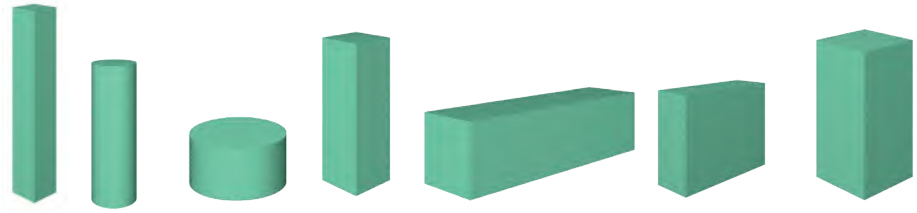

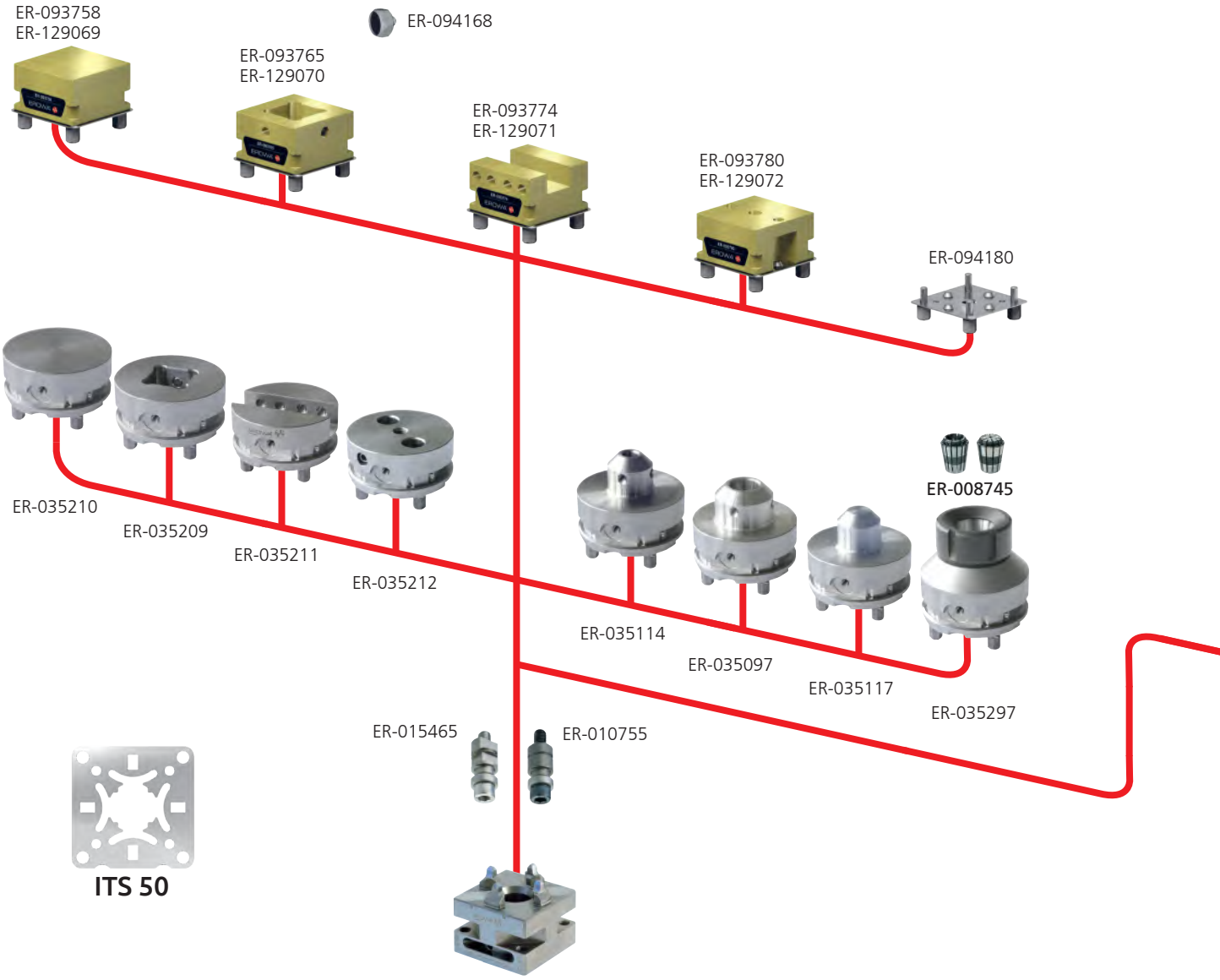

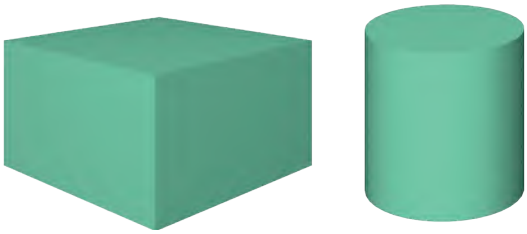

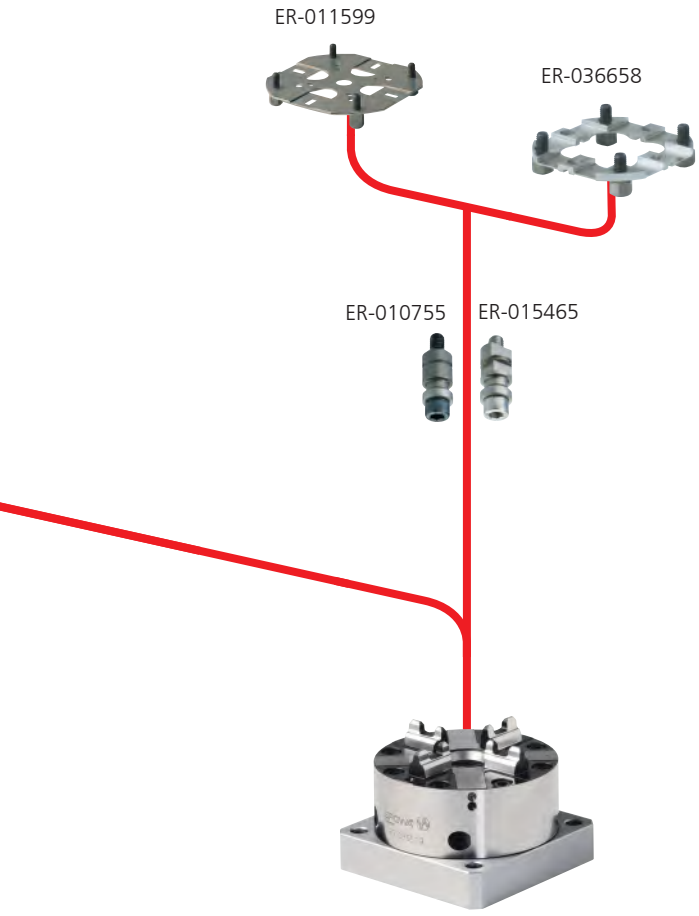



ITS 100

EROWA ITS

Centering plates

The centering plates are the most cost-effective base for clamping electrodes. They are mounted directly onto the blanks. This way, jigs and fixtures are also ITS compatible. The hole pattern for mounting is simply drilled into the blank with a drilling template, or by means of an NC program.

Technical data	ITS centering plates
Material	corrosion-resistant
System accuracy in chuck	< 0.002 mm
Versions:	
Centering plate 50	small electrode weights
Centering plate 100 M8	workpieces and electrodes
Centering plate G	workpieces, jigs and fixtures for chip-removal machining
Handling	with EROWA Handling systems or electrode changer.

ER-094180 **Centering plate 50 C 50 pieces**

ER-094181 **Centering plate 50 C 5 pieces**



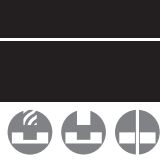

Version	Corrosion-resistant, including sealing plate and 4 supporting feet each.
Application	Small electrode weights.
Mounting	Mounted directly on plane surface of blank.

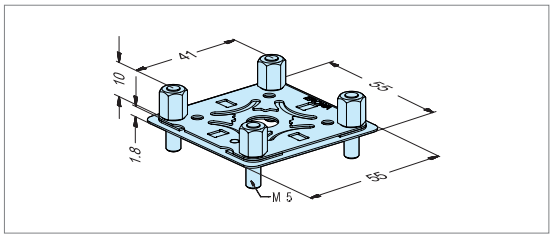

ER-011599 **Centering plate 100 M8 10 pieces**

ER-050195 **Centering plate 100 M8 1 unit**





Version	Corrosion-resistant, including 4 supporting feet M8 and 4 x M5 screws per plate.
Application	Workpieces and electrodes.
Mounting	Mounted directly on of blank plane surface of blank.

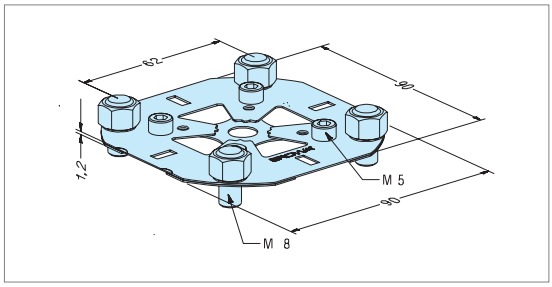

EROWA ITS

Centering plates

ER-036657	**Centering plate G, 1 piece with supporting feet 10.2mm / 11.4 mm**
ER-036658	**Centering plate G, 5 pieces with supporting feet 10.2mm / 11.4 mm**

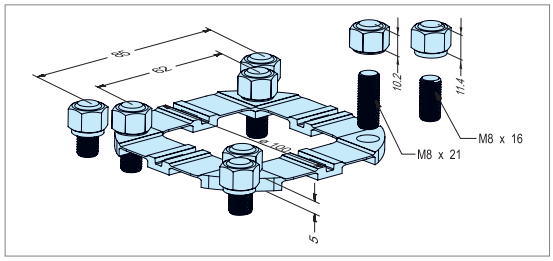

Version	Centering plate G (ground), rust-resistant, including 8 supporting feet SW13, of which 4 supporting feet with height 10.2mm and 4 with height 11.4mm.
Application	For workpieces, fixtures and gauges in chip-cutting production.
Please note	Can also be used to repair older pallet types ø 148 G, for instance ER-015777, ER-015899, ER-032699, etc.
To fit a blank	According to the fitting instructions supplied.

ER-147223	**Centering plate G, 1 pieces with supporting feet 10.2 mm**
ER-153058	**Centering plate G, 5 pieces with supporting feet 10.2 mm**

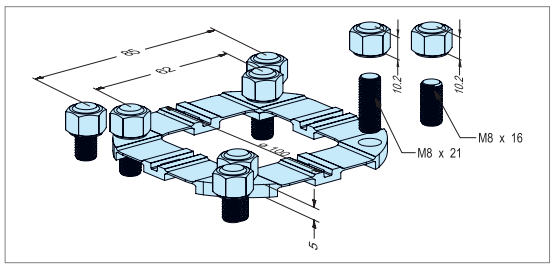

Version	Centering plate G (ground), rust-resistant, including 8 supporting feet SW13, height 10.2mm.
Application	For workpieces, fixtures and gauges in chip-cutting production.
Please note	Can also be used to repair new pallet types ø 148 G, for instance ER-115308, ER-115379, ER-115388, etc.
To fit a blank	According to the fitting instructions supplied.

EROWA ITS

Electrode holders

ITS electrode holders are used to accommodate electrodes or workpieces throughout the machining sequence and for storage. The advantageous price per unit enables users to have a number of them on hand.

Information about Holder C: thanks to the integrated sealing plate, these holders, in combination with a fitting sealing ring, can be inserted completely sealed into the ITS chuck.

Technical data	ITS standard electrode holders
Material	body: brass centering plate: corrosion-resistant
System accuracy in chuck	< 0.002 mm
Recommended max. weight with electrode	20 kg / 44 lbs
Handling	with EROWA Handling systems or electrode changer.

ER-093758	**Uniblank C** **12 pieces**
	INOX auto
Version	Brass holder ITS 50 without mounting boreholes. With gripper slots and sealing plate.
Application	To mount electrodes and workpieces of various shapes.
To fit blank	Drill mounting boreholes yourself according to requirements.
Note	Order EWIS™ chip (ER-094168) and chucking spigots separately.

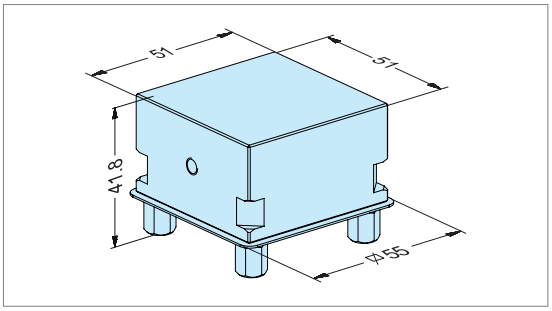

ER-093765	**Prisround C** **12 pieces**
	INOX auto
Version	Brass holder ITS 50 with square preparation, gripper slots and sealing plate. Including 25xM8 threaded pins.
Application	To mount square electrodes and workpieces with shaft sizes of up to 25mm.
Mounting	With threaded pins. If necessary, center with with spacer plates ER-010523.
Note	Order EWIS™ chip (ER-094168) and chucking spigots separately!

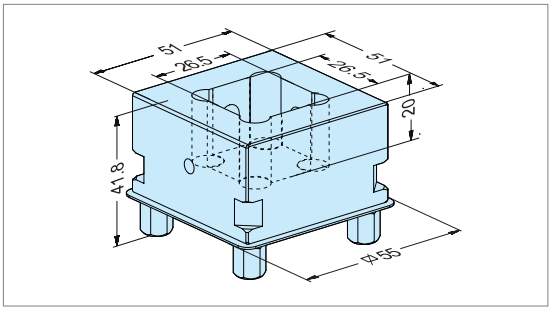

ER-093774 Uniholder C
12 pieces

INOX auto

Version	Brass holder ITS 50 with 20.5mm slot, gripper slots and sealing plate. Including 25xM8 threaded pins.
Application	To mount electrodes and workpieces with shank sizes of up to 20 mm.
To fit blank	With threaded pins. If necessary, center with spacer plates ER-010532.
Note	Order EWIS™ chip (ER-094168) and chucking spigots separately!

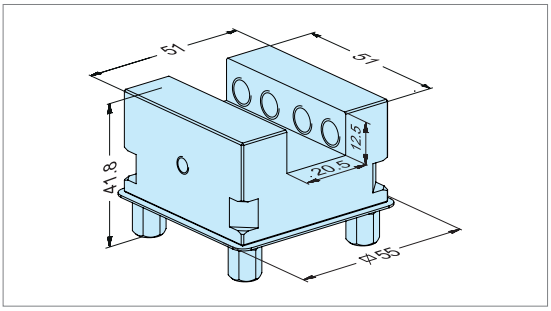

ER-093780 Uniplate C
12 pieces

INOX auto

Version	Brass holder ITS 50 with rear mounting option, gripper slots and sealing plate. Surface 51x51mm faced. Including 24xM6 bolts and washers.
Application	To mount electrodes and workpieces with a base surface of more than 50 mm.
To fit blank	With 2 x M6 bolts.
Note	Order EWIS™ chip (ER-094168) and chucking spigots separately.

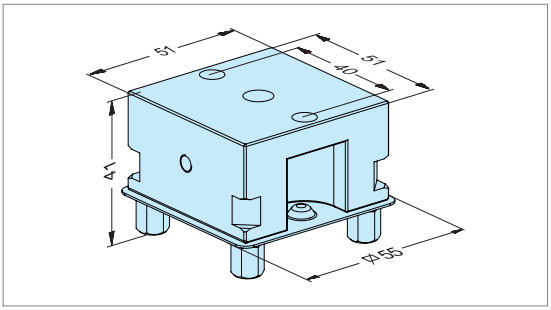

ER-129069 Uniblank
12 pieces

INOX auto

Version	Brass holder ITS 50 without mounting boreholes.
Application	To mount electrodes and workpieces of various shapes.
To fit blank	Drill mounting boreholes yourself according to requirements.
Please note	Order EWIS™ chip (ER-094168) and chucking spigots separately.

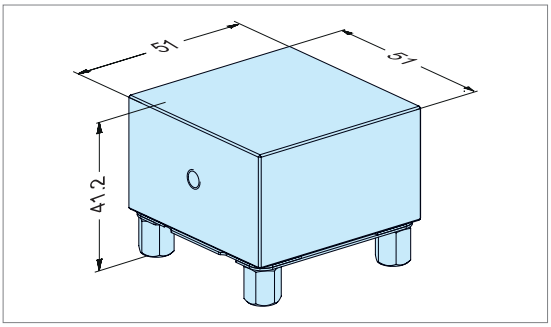

ER-129070 Prisround
12 pieces

INOX auto

Version	Brass holder ITS 50 with square preparation. Inlcuding 25xM8 threaded pins.
Application	To mount square electroces and workpieces with shank sizes up to 25mm.
To fit blank	With threaded pins. If necessary, center with spacer plates ER-010532.
Please note	Order EWIS™ chip (ER-094168) and chucking spigots separately.

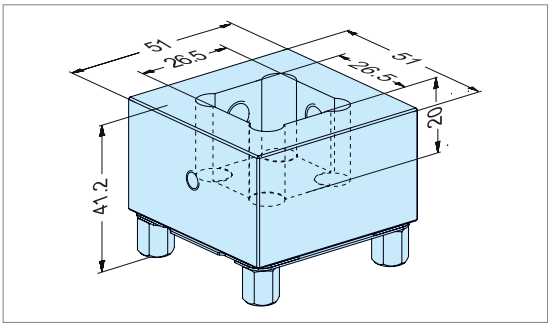

EROWA ITS

Electrode holders

ER-129071 **Uniholder**
12 pieces



Version	Brass holder ITS 50 with 20.5mm slot. Including 25xM8 threaded pins.
Application	To mount electrodes and workpieces with shank sizes of up to 20mm.
To fit blank	With threaded pins. If necessary, center with spacer plates ER-010532.
Please note	Order EWIS™ chip (ER-094168) and chucking spigots separately.

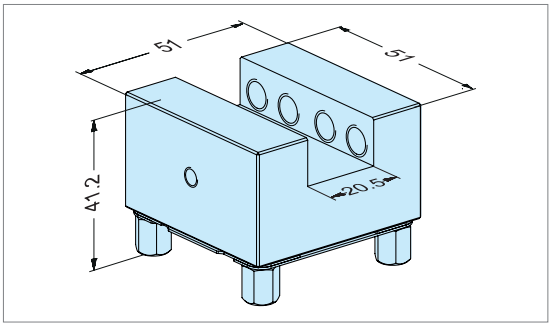

ER-129072 **Uniplate**
12 pieces



Version	Brass holder ITS 50 with rear mouneting option. Faced surface of 51x51mm. Including 24xM6 bolts and washers.
Application	To mount electrodes and workpieces with more than 50mm base surface.
To fit blank	With 2xM6 bolts.
Please note	Order EWIS™ chip (ER-094168) and chucking spigots separately.

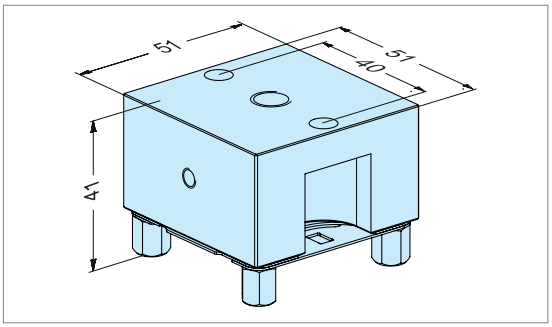

ER-010627 **Uniplate Alu 80 x 80**
4 pieces



Version	Set of 4 units, aluminum, system size 100, with M8 supports.
Application	To mount electrodes and workpieces with a base surface of more than 70 mm.
Mounting	With 4 x M6 bolts into the base surface.

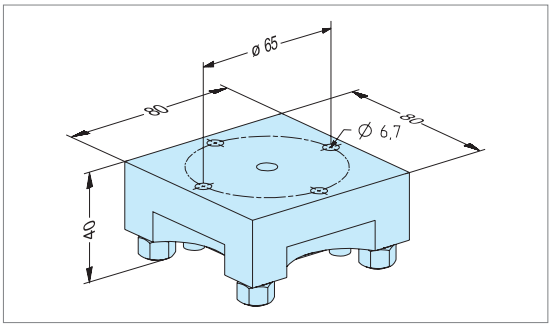

ER-010532 **Spacer plate**
300 pieces

Version	6 x 50 plates. Corrosion-resistant. Thicknesses from 0.5 mm to 5 mm.
Application	Centering of blanks in electrode holders.

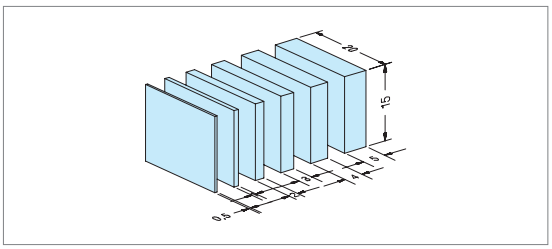

ER-013913 System stand 10 pieces

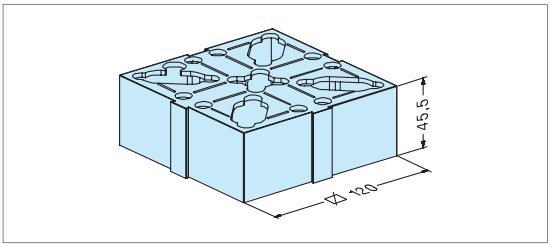

Version	Plastic, set of 10.
Application	As a rack for four electrode holders 50 or a pallet ø 115/148 mm.
Please note	System racks can be stuck together without any gaps, e. g. to be stored in drawers.

ER-011591 System stand ITS 50 12-fold set with 10 pieces

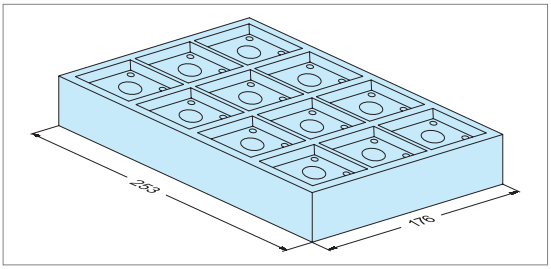

Version	Set of 10 styrene stands.
Application	Storage and transport of electrode holders system size 50.

ER-022250 Adapter pallet ITS 50 / ø 148





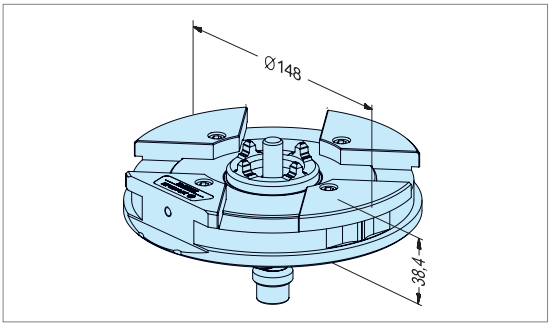

Version	ITS system size 100. Lock with central M10 locking bolt.
Application	To accommodate ITS Electrode holders system 50. Lock with central M10 locking bolt. For automatic handling.

EROWA ITS

Holder ø 72

In comparison with the ITS holder 3, the holders ø 72 have a larger clamping surface. In combination with the anti-contamination covers, they also provide maximum protection against the contamination of the chucks. The holders are the ideal solution for autonomous production.

Technical data	ITS Holder ø 72
Material	steel, corrosion-resistant
System accuracy, chuck	< 0.002 mm
Recommended max. weight with electrode	20 kg / 44 lbs
Handling	with EROWA handling systems or electrode changers.

ER-035210 Uniblank ø 72 6 pieces





Version: Set of 6 units, system size ITS 50. Without chucking spigots.
Application: To mount electrodes and workpieces of various shapes.
Mounting: Attachment boreholes to be drilled according to requirements.

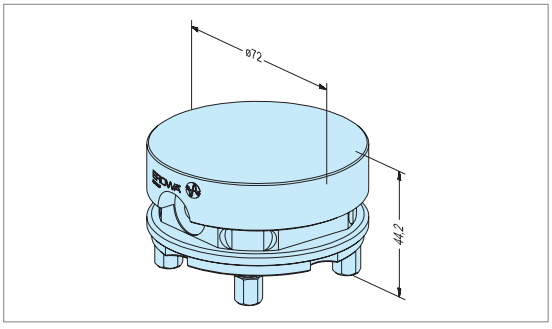

ER-035209 Prisround ø 72 6 pieces





Version: Set of 6 units, system size ITS 50. Without chucking spigots.
Application: To mount electrodes and workpieces with shafts of up to square 25 mm.

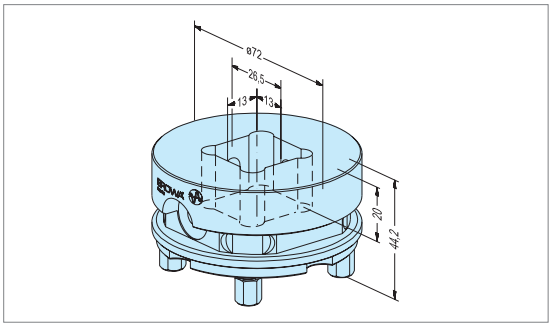

ER-035211 Uniholder ø 72 6 pieces





Version: Set of 6 units, system size ITS 50. Without chucking spigots.
Application: To mount electrodes and workpieces with shaft of up to 20 mm.

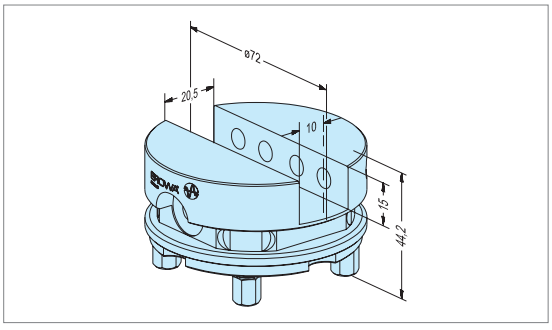

ER-035212 Uniplate ø 72 6 pieces

auto | 72

Version	Set of 6 units, includes 12 PinLock locking pins. System size ITS 50, without chucking spigots.
Application	To mount electrodes and workpieces with surface more than square 40 x 40 mm or ø 50 mm.
Mounting	With two PinLock locking pins.

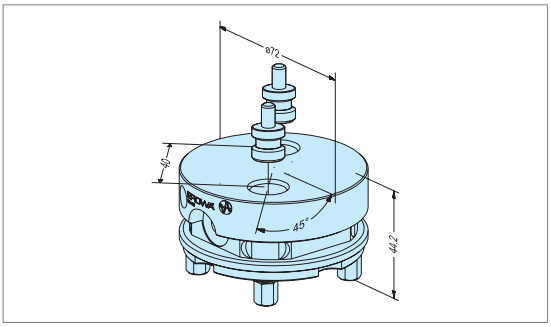

ER-035114 Blank holder ø 10 / ø 72 6 pieces

INOX | auto | 72

Version	Set of 6 units, system size ITS 50. Without chucking spigots.
Application	To clamp cylindrical parts with ø 10 mm.

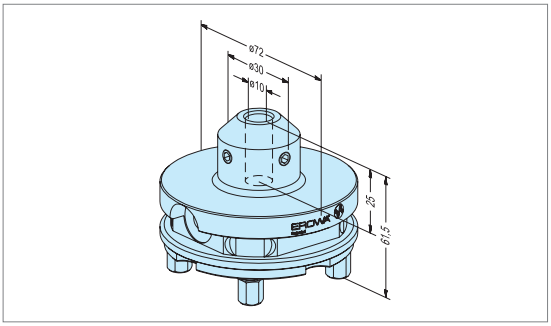

ER-035097 Blank holder ø 20 / ø 72 6 pieces

INOX | auto | 72

Version	Set of 6 units, system size ITS 50. Without chucking spigots.
Application	To clamp cylindrical parts with ø 20 mm.

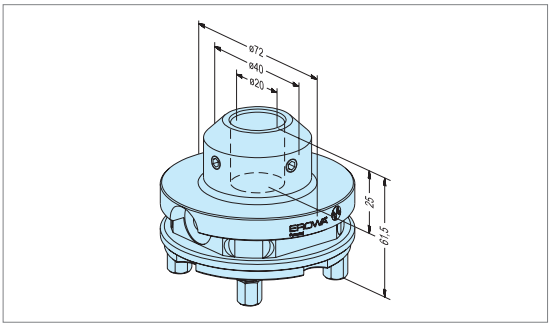

ER-035117 Blank holder ø 72 without borehole 6 pieces

INOX | auto | 72

Version	Set of 6 units, system size ITS 50. Without chucking spigots.
Application	To clamp cylindrical parts.
Mounting	Attachment borehole up to max. ø 12 mm to be drilled according to requirements.

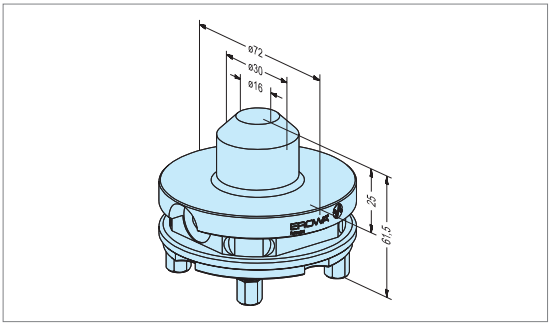

ER-035297 Collet chuck holder ø 72 1 piece

auto | 72

Version	One collet chuck holder with chucking spigot. System size ITS 50.
Application	To clamp cylindrical parts. Clamping range ø 2 mm - ø 20 mm.
Please note	Order collet chucks type ETS 32 separately.

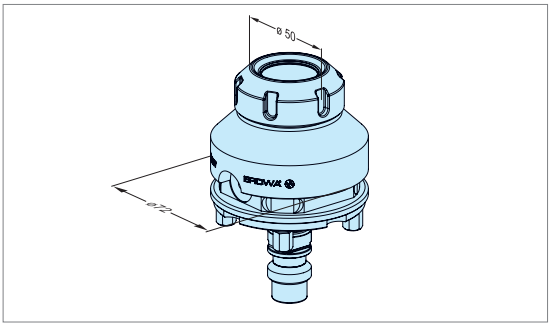

EROWA ITS Chucking spigots

For every application the proper version

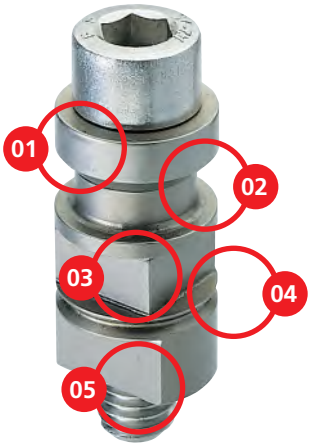

01 | Movable upper part for error compensation

02 | Groove for ball lock

03 | Flats for magazine engagement

04 | Groove for O-ring seal

05 | Flats for gripper

Manual chucking spigots





ER-010755



ER-010742





Automatic chucking spigots





ER-007980



ER-015465

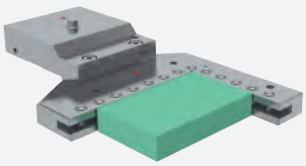

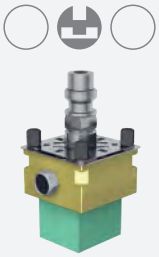

1



2



3



4

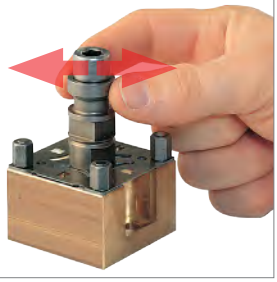

The various versions are exactly tailored to individual applications.

The chucking spigot is only screwed into the holder or pallet for the machining process. Since it does not influence the reference point, it can be removed to save space and only be screwed back in when the holder or pallet is used once more.

Technical data	ITS Chucking spigot
Material	Steel, hardened
Bolt	M10

ER-010755 Chucking spigot F/M EDM for flushing 20 pieces

Version	Manual. M10x45mm bolt, with flushing hole.
Application	For ITS electrode holders. For EDM and light chip cutting.

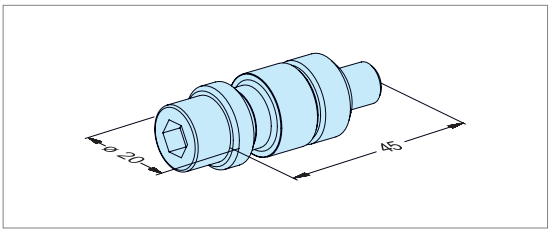

ER-010742 Chucking spigot F/M production 1 unit

ER-051381 Chucking spigot F/M Production 20 pieces

Version	Manual. M10x50mm bolt, 12.9 quality (without flushing hole).
Application	To mount on EROWA pallets for chip-cutting machining processes.

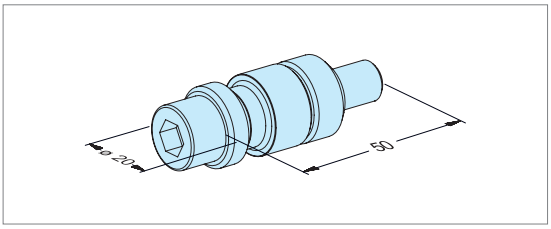

ER-007980 Chucking spigot F/A Inox 20 pieces

Version	Automatic. M10x45mm bolt, stainless (without flushing hole).
Application	For all holders that are changed automatically. For WEDM and light chip cutting.

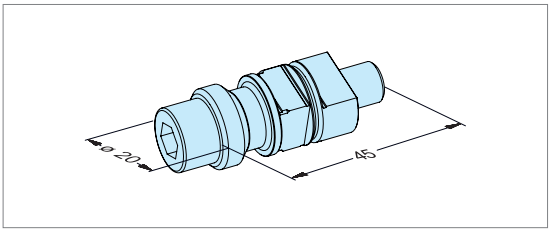

ER-015465 Chucking spigot F/A EDM M10 x 45 for flushing, 20 pieces

Version	Automatic. M10x45mm bolt, with flushing hole.
Application	For ITS electrode holders that are changed automatically. For EDM and light chip cutting.

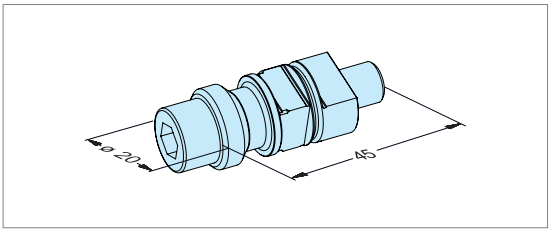

EROWA ITS

Square Electrode System and System Plus

EROWA square holders are highly suitable for the manufacture of small electrodes. Their applications consists of milling, turning, grinding, as well as EDM sinking and WEDM. Used in addition to the System Plus, they represent a well-rounded, well thought-out range of products for everyone who works with many small electrodes.





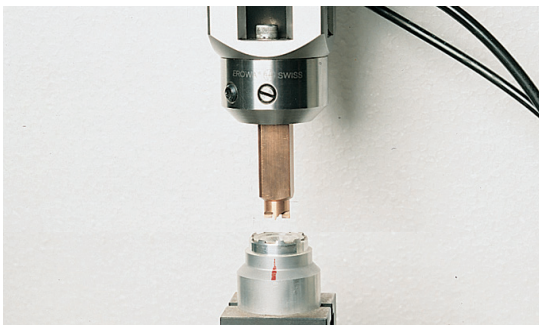

System Plus
The stamped centering profile directly on the blank forms the system reference.



1. Preparation
Stamp in the centering profile.



2. Milling
On a straight System Plus holder.

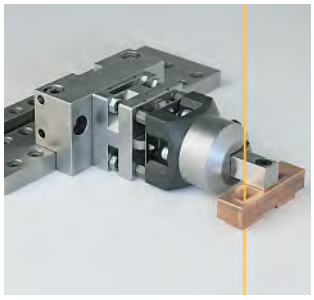

3. WEDM
On an angle holder.



4. EDM
On a straight holder.

EROWA ITS Square Electrode System

The components

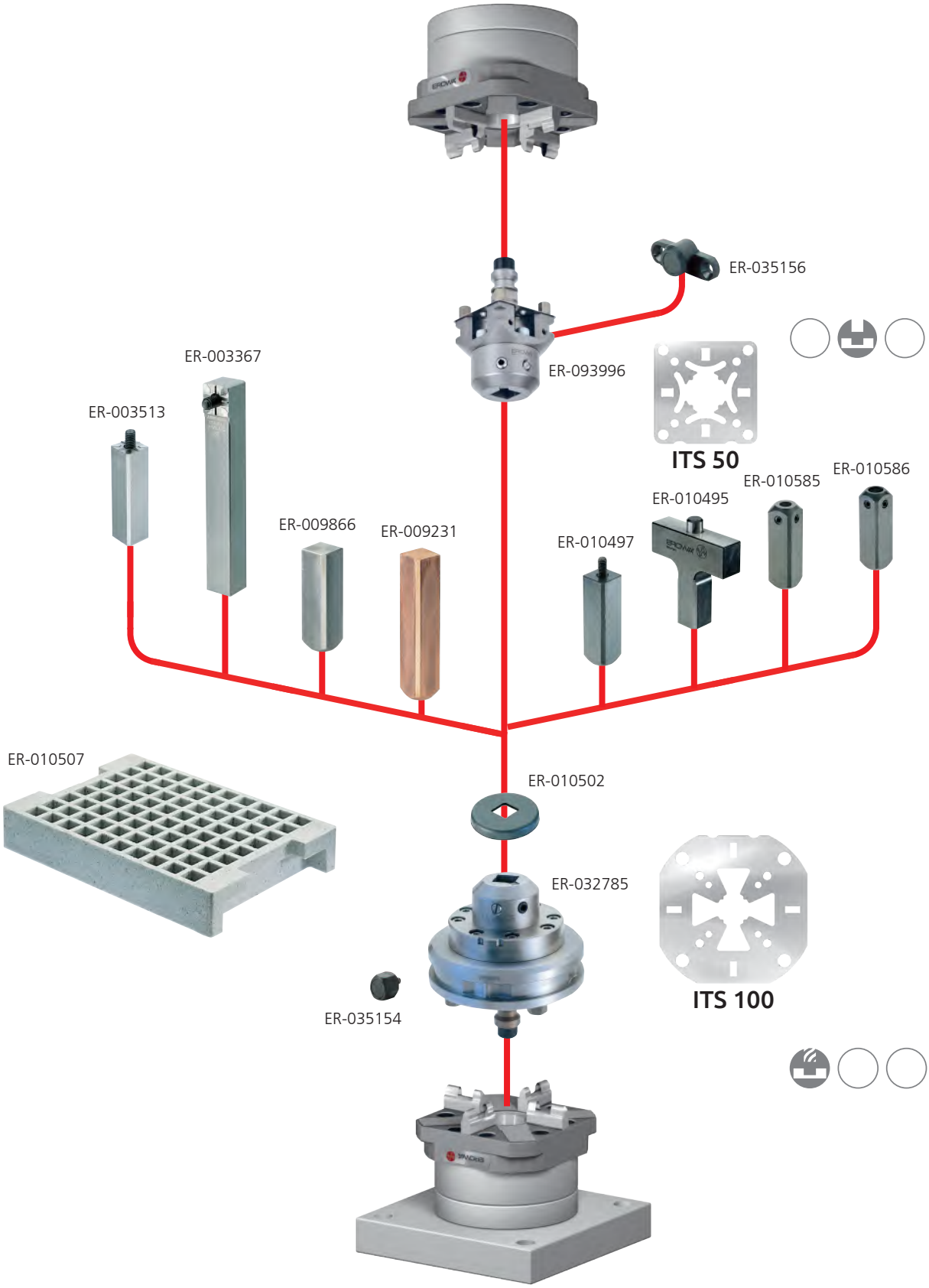

EROWA ITS

Square Electrode Clamping System 15

ER-093996	**Square 15 electrode holder for ITS 50 C 1 piece**
ER-093997	**Square 15 electrode holder for ITS 50 C 12 pieces**

INOX auto

Version ITS system size 50.
Application EDM/WEDM.

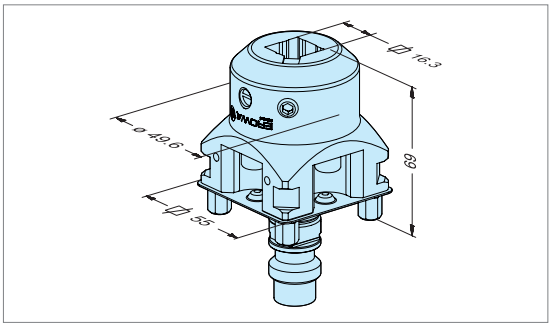

ER-032785	**Square 15 holder EWIS™ for ITS 100**

INOX auto

Version ITS system size 100
Application EDM and chip-cutting processes.

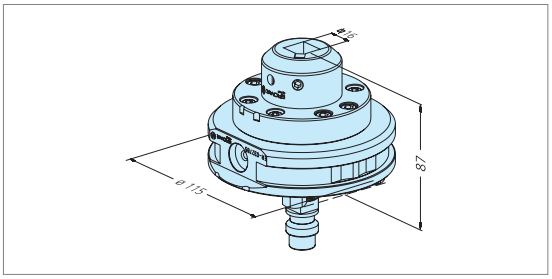

ER-007870	**Square 15 holder front part**

Version Only clamping part of the holder.
Application For the construction on multiple fixtures.

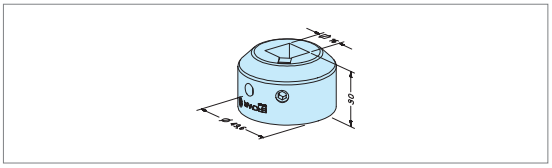

ER-015627	**Square 15 holder on adapter ø 85**

Version Clamping part fitted to flange, positioned with rods.
Application For the construction on multiple fixtures.
Mounting From above through the flange into the base.

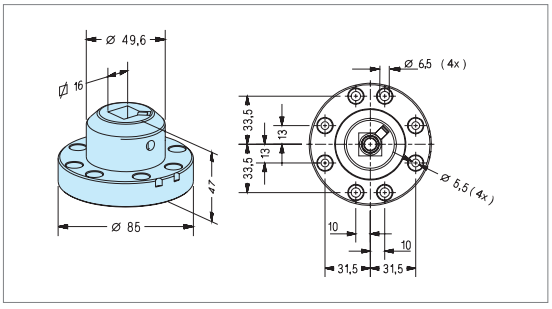

ER-009231 Square 15 electrode blank 40 pieces

Version Set of 40 blanks. EDM copper, drawn profile.
Application Blank for electrodes of up to 15 mm square.

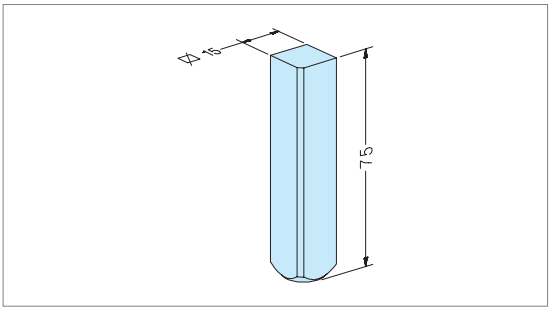

ER-009866 Square 15 electrode shaft 40 pieces

Version Set of 40 shafts, drawn steel.
Application To solder or bond to copper or graphite electrode blanks.

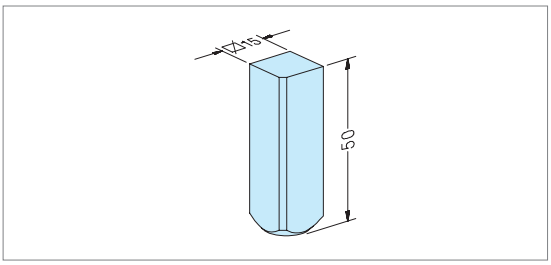

ER-010497 Square 15 electrode shaft M5 10 pieces

Version Set of 10 blanks, hardened, ground, including M5 bolts.
Application To screw on to electrode blanks.

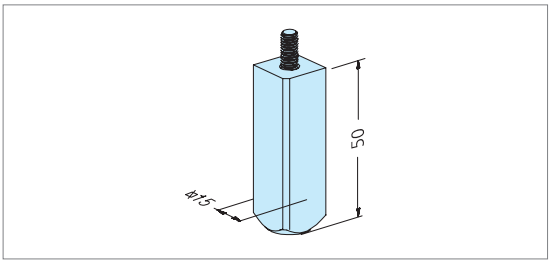

ER-010585 Square 15 blank holder ø 8mm

Version Steel, hardened, ground.
Application To clamp round parts of ø 8 mm.

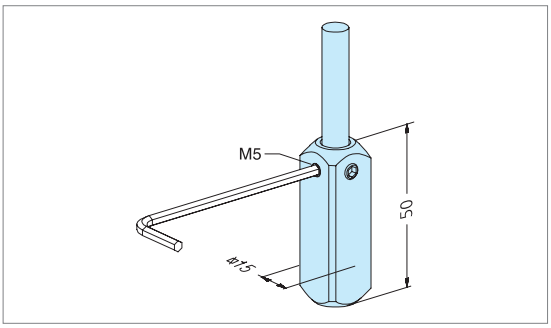

EROWA ITS

Square Electrode Clamping System 15 and System Plus

ER-010586 Square 15 blank holder ø 6mm

Version Steel, hardened, ground.
Application To clamp round parts of ø 6 mm.

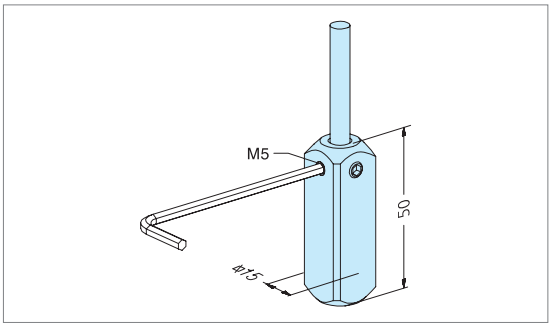

ER-003467 Holder straight 15 x 15 x 37mm
ER-003513 Holder straight 15 x 15 x 57mm

Version Steel, hardened, ground. Centering profile 15 mm. Holder incl. bolt.
Application For electrodes of copper or graphite.
Fitting according to supplied instructions.

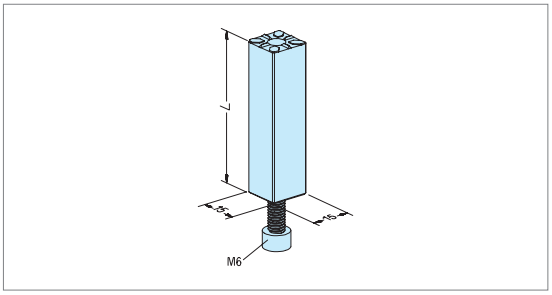

ER-003470 Angle holder 15 x 15 x 50mm
ER-003367 Angle holder 15 x 15 x 100mm

Version Steel, hardened, ground. Centering profile 15 mm. Holder incl. bolt.
Application For electrodes of copper or graphite.
Fitting according to supplied instructions.

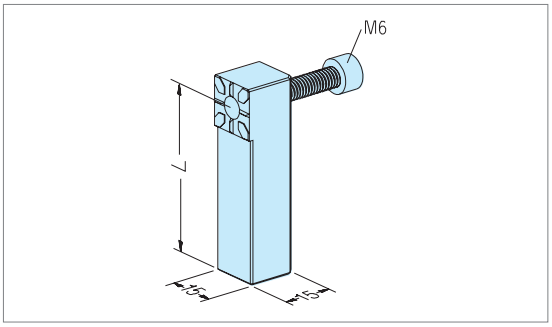

ER-003422 Prism die size 15

Version Steel, hardened, ground. Embossed profile 15 mm.
Application Embossing of centering prisms in blanks.

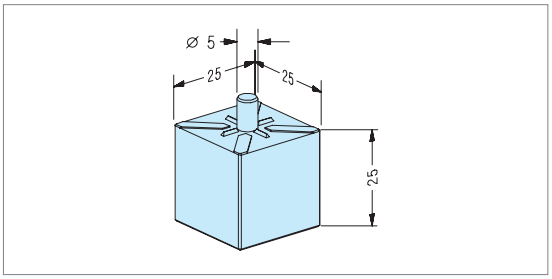

ER-010507 Square 15 electrode stand 10 pieces

Version Set of 10 stands, styrene.
Application Storage and transport of blanks and electrodes.

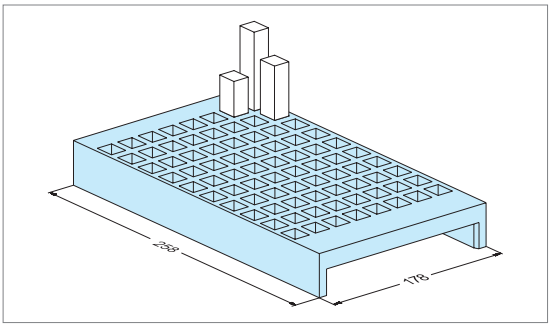

ER-010502 Square 15 chip guard 10 pieces

Version Set of 10 guards, oil-resistant rubber.
Application Protection against chips during electrode manufacturing.

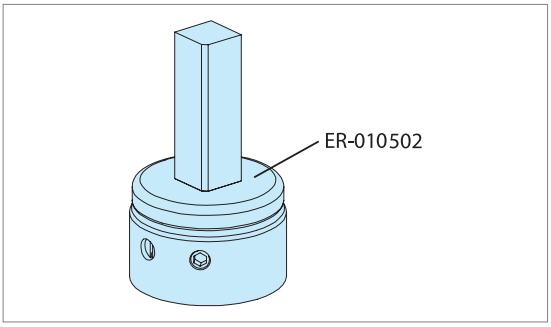

ER-010495 Square 15 alignment rail

Version Steel, hardened, ground.
Application Testing of concentricity and angular accuracy of holder to ITS system.

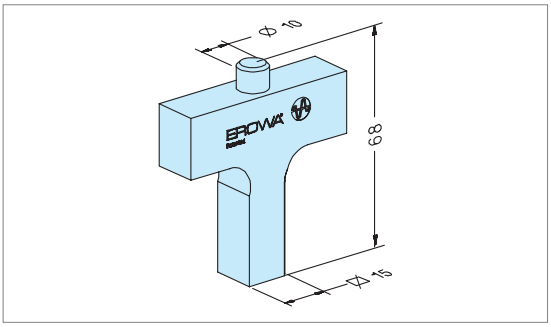

EROWA ITS

Square Electrode Clamping System 25

ER-093992	**Square 25 electrode holder for ITS 50 C 1 piece**
ER-093993	**Square 25 electrode holder for ITS 50 C 12 pieces**





Version ITS system size 50.
Application EDM/WEDM.

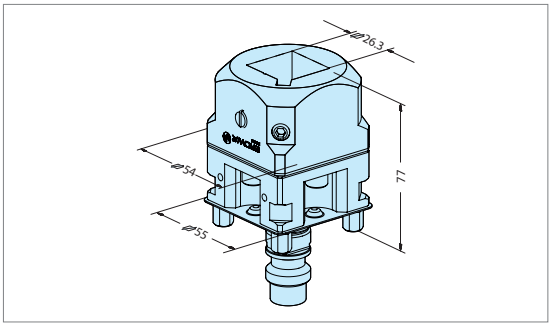

ER-032810	**Square 25 holder EWIS™ for ITS 100**





Version ITS system size 100.
Application EDM and chip-cutting processes.

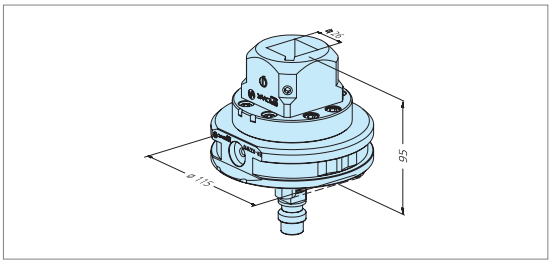

ER-010622	**Square 25 holder front part**



Version Only clamping part of the holder.
Application For the construction on multiple fixtures.

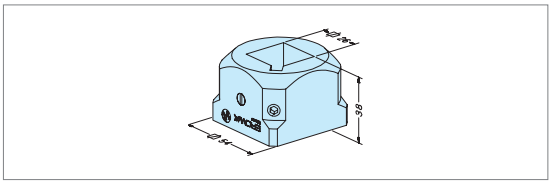

ER-015629	**Square 25 holder on adapter ø 85**



Version Clamping part fitted to flange, fixed with rods.
Application For the construction on multiple fixtures.
Mounting From above through the flange into the base.

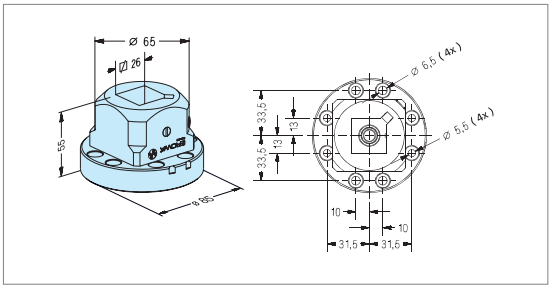

EROWA ITS

Square Electrode Clamping System 25 and System Plus

ER-009209 Square 25 electrode blank 24 pieces

Version Set of 24 blanks. EDM copper, drawn profile.
Application Blank for electrodes of up to 25 mm edge square.

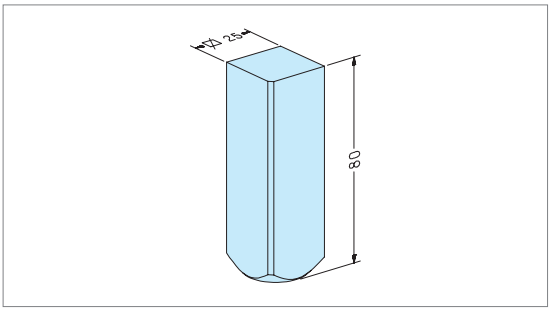

ER-010491 Square 25 electrode shaft 24 pieces

Version Set of 24 shafts, soft steel, drawn profile.
Application To solder or bond to blanks of up to 40 mm square.

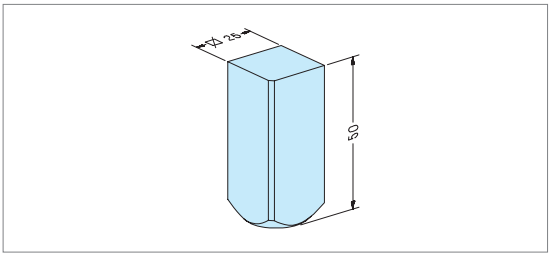

ER-003405 Holder straight 25 x 25 x 40mm
ER-003439 Holder straight 25 x 25 x 65mm

INOX

Version Steel, hardened, ground. Centering profile 25 mm. Holder incl. bolt.
Application For electrodes of copper or graphite.
Fitting according to supplied instructions.

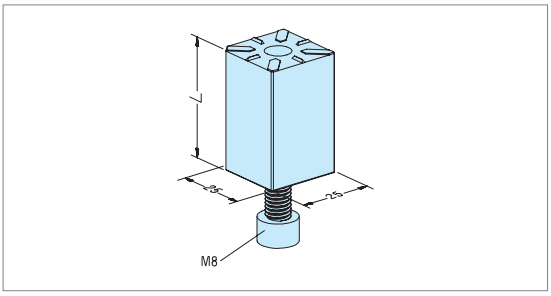

ER-003393 Angle holder 25 x 25 x 90mm

INOX

Version Steel, hardened, ground. Centering profile 25 mm. Holder incl. bolt.
Application For electrodes of copper or graphite. Fit according to supplied instructions.

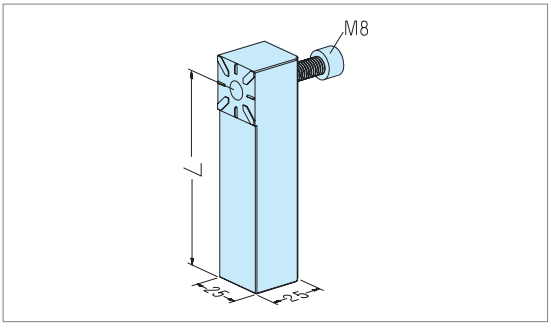

EROWA ITS

Square Electrode Clamping System 25 and System Plus

ER-003489 Prism die size 25

Version Steel, hardened, ground. Embossed profile 25 mm.
Application Embossing of centering prisms in blanks.

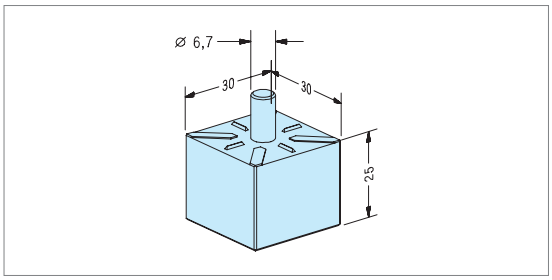

ER-010592 Square 25 alignment rail

Version Steel, hardened, ground.
Application Testing of concentricity and angular accuracy of the holder to the ITS system.

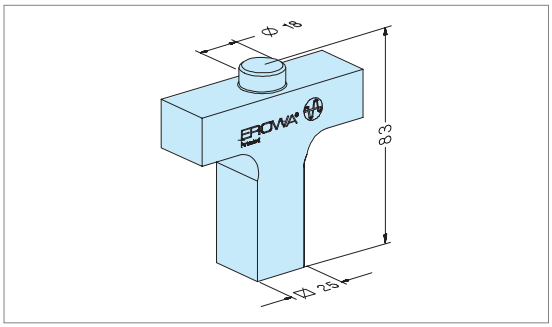

ER-010505 Square 25 chip guard 10 pieces

Version Set of 10 guards, oil-resistant rubber.
Application Protection against chips during electrode manufacturing.

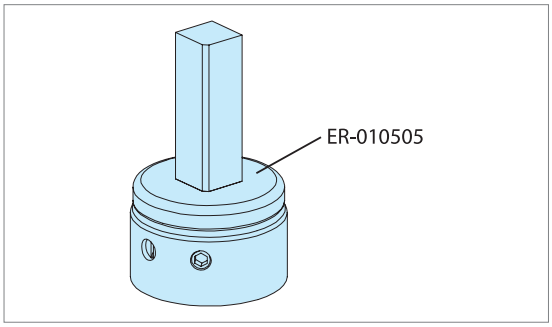

ER-010511 Square 25 electrode stand 10 pieces

Version Set of 10 styrene stands.
Application Storage and transporting of blanks and electrodes.

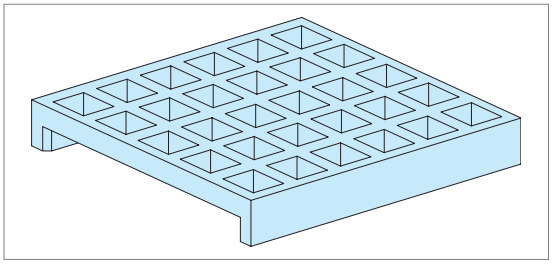

EROWA ITS Special Electrode Holders

The components

These holders support the manufacturing of special electrodes. Thanks to their adjustable angular and axial positions, existing electrodes can be integrated into the system. One of each of these holders should be kept ready for use in every workshop.

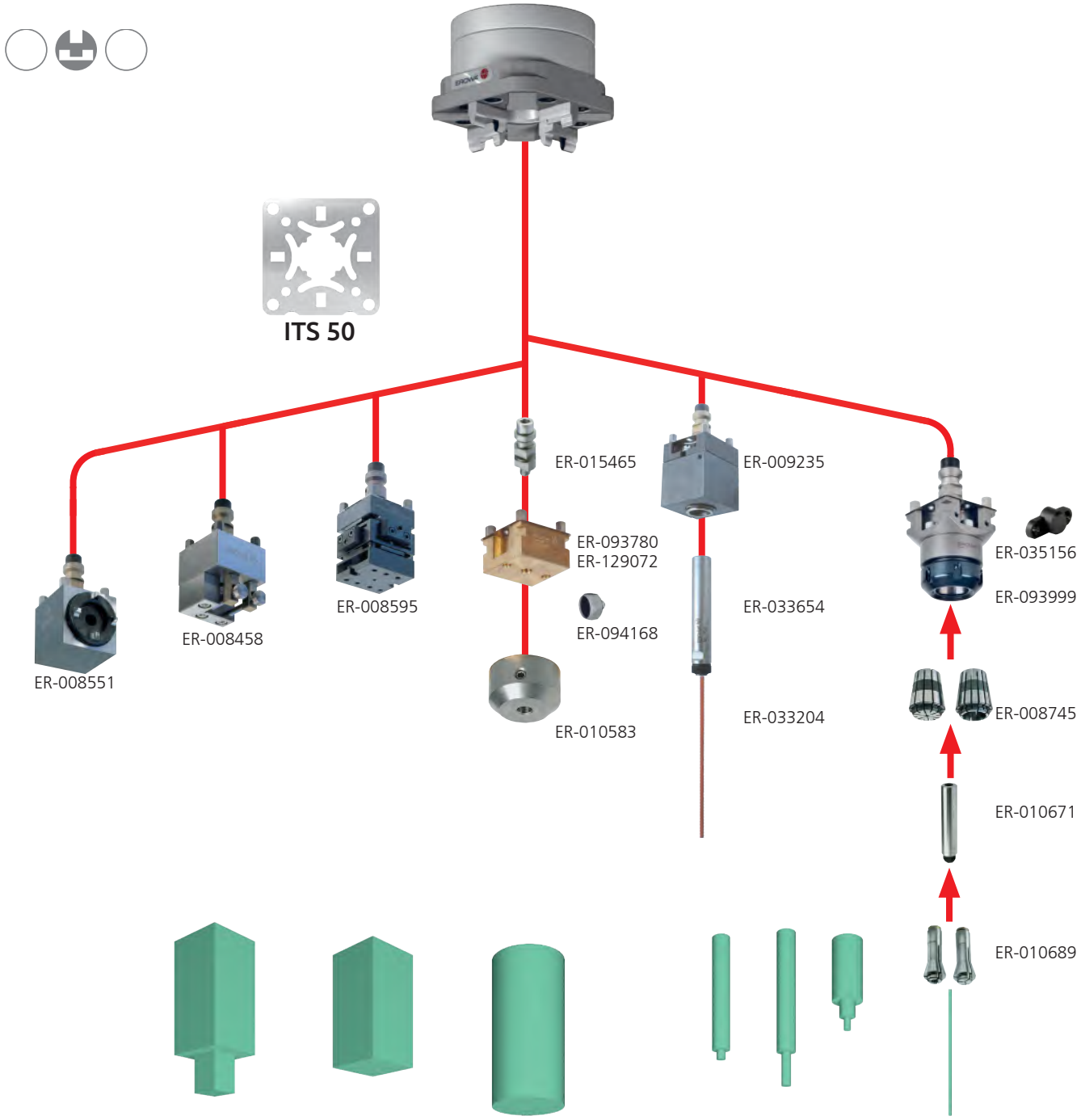

EROWA ITS

Special Electrode Holders

ER-093999 Collet chuck holder 50 C

Version: System size 50, incl. wrench.
Application: For round material up to ø 20 mm.

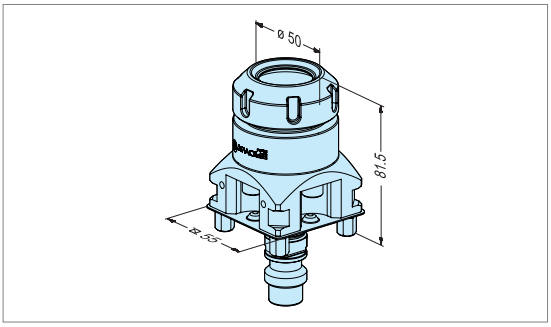

ER-149572 Collet chuck holder on pallet ø 115 MS

Version: Steel. Pallet with centering plate 100 (punched).
Application: To accommodate round material, workpieces or electrodes up to ø 20mm.

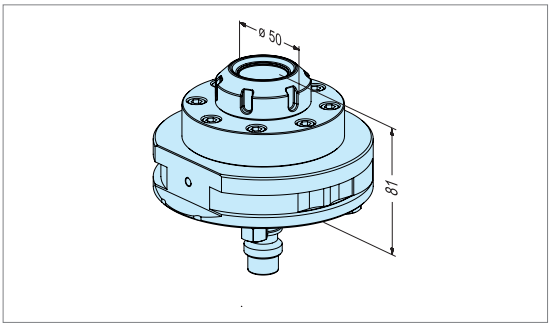

ER-008745 Set of collet chucks ETS 32 set to 19 pc. ø 2,5 - ø 20 mm

Version: 19 collet chucks from ø 2.5 mm to ø 20 mm.
Application: For round material up to ø 20 mm.

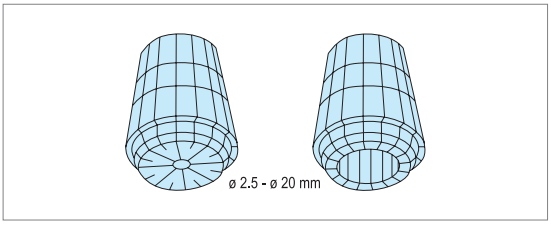

EROWA ITS

Special Electrode Holders

ER-006700	**Collet chuck ø 2.5mm ETS 32**
ER-006701	**Collet chuck ø 3mm ETS 32**
ER-006702	**Collet chuck ø 4mm ETS 32**
ER-006703	**Collet chuck ø 5mm ETS 32**
ER-006704	**Collet chuck ø 6mm ETS 32**
ER-006705	**Collet chuck ø 7mm ETS 32**
ER-006706	**Collet chuck ø 8mm ETS 32**
ER-006707	**Collet chuck ø 9mm ETS 32**
ER-006708	**Collet chuck ø 10mm ETS 32**
ER-006709	**Collet chuck ø 11mm ETS 32**
ER-006710	**Collet chuck ø 12mm ETS 32**
ER-006711	**Collet chuck ø 13mm ETS 32**
ER-006712	**Collet chuck ø 14mm ETS 32**
ER-006713	**Collet chuck ø 15mm ETS 32**
ER-006714	**Collet chuck ø 16mm ETS 32**
ER-006715	**Collet chuck ø 17mm ETS 32**
ER-006716	**Collet chuck ø 18mm ETS 32**
ER-006717	**Collet chuck ø 19mm ETS 32**
ER-006718	**Collet chuck ø 20mm ETS 32**

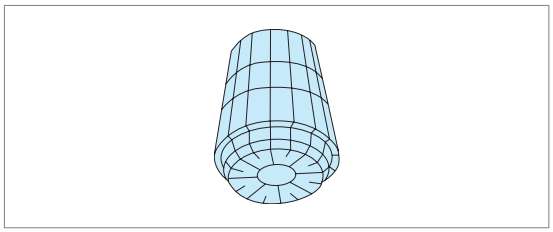

Version Delivered separately, clamping range per collet chuck:
ø 2.5 mm = 0.5 mm
ø 3-20 mm = 1 mm

Application Round material from ø 2 mm to ø 20 mm.

ER-010671	**Mini collet chucks holder ø 20**

Version Steel ground ø 20 mm.

Application In ø 20 mm adapter or in ø 20 mm collet chuck for mini collet chucks of ø 0.2 mm to ø 2 mm.

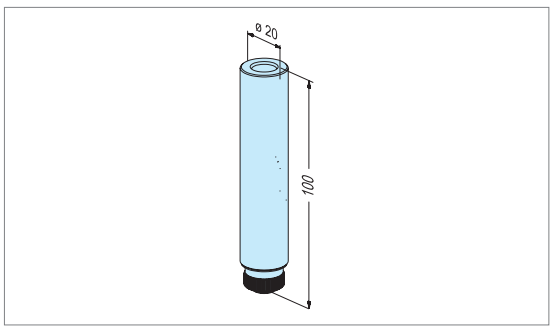

ER-010689	**Set of mini collet chucks set of 19 pc. ø 0.2 - ø 2.0 mm**

Version Set of 19 collet chucks ø 0.2 mm to ø 2.0 mm, steel ground, with brass seal for appropriate diameter.

Application Clamping of small electrode tubes ø 0.2 mm to ø 2.0 mm.

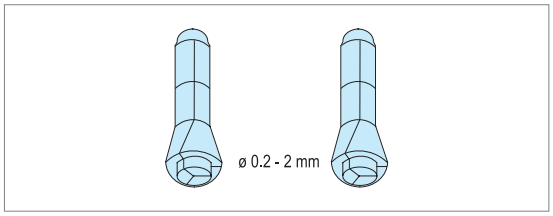

ER-002403	Mini collet chuck ø 0.2mm
ER-002404	Mini collet chuck ø 0.3mm
ER-002405	Mini collet chuck ø 0.4mm
ER-002406	Mini collet chuck ø 0.5mm
ER-002407	Mini collet chuck ø 0.6mm
ER-002408	Mini collet chuck ø 0.7mm
ER-002409	Mini collet chuck ø 0.8mm
ER-002410	Mini collet chuck ø 0.9mm
ER-002411	Mini collet chuck ø 1.0mm
ER-002412	Mini collet chuck ø 1.1mm
ER-002413	Mini collet chuck ø 1.2mm
ER-002414	Mini collet chuck ø 1.3mm
ER-002415	Mini collet chuck ø 1.4mm
ER-002416	Mini collet chuck ø 1.5mm
ER-002417	Mini collet chuck ø 1.6mm
ER-002418	Mini collet chuck ø 1.7mm
ER-002419	Mini collet chuck ø 1.8mm
ER-002420	Mini collet chuck ø 1.9mm
ER-002421	Mini collet chuck ø 2.0mm

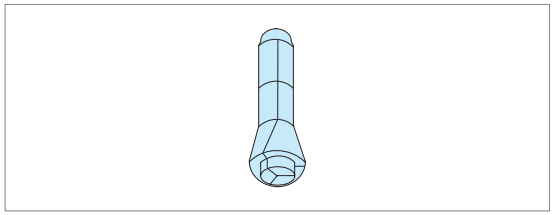



Version Steel, ground, with brass seal for appropriate diameter.
Application Clamping of small electrode tubes.

EROWA ITS

Special Electrode Holders

ER-008595 Zekant

Version: Electrode holder with cross slide (2 mm travel) and pendulum movement (+/– 4°).

Application: Clamping and alignment of electrodes. Not suitable for chip-machining.

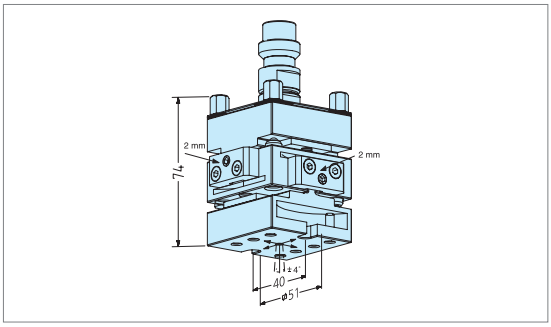

ER-008458 V-block holder stainless

Version: Prism ground bearing surfaces 10 mm +/– 0.005 mm from the center.

Application: Clamping from outside, precision machined electrodes or small workpieces.

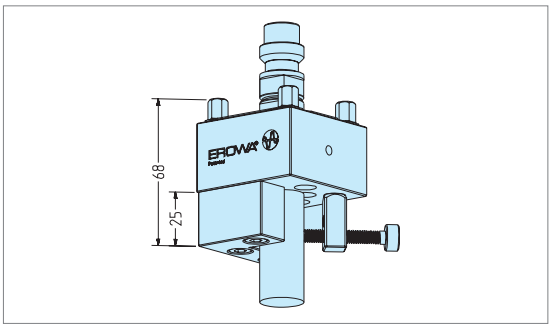

ER-008551 Horizontal holder ITS 50

Version: Hardened and ground 90° angle and centering accuracy 0.005 mm.

Application: Clamping of electrode holders in horizontal position, may not be used for chip-machining.

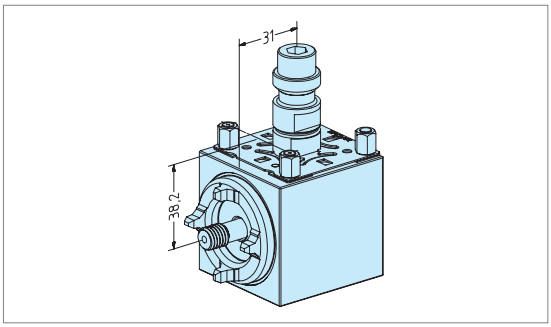

ER-010583 Blank holder ø 10mm
ER-010581 Blank holder ø 12mm
ER-010577 Blank holder ø 20mm

Version: Steel, hardened, ground bore.

Application: Fit to Uniplate C ER-093780 for clamping of precision copper tubes or bars.

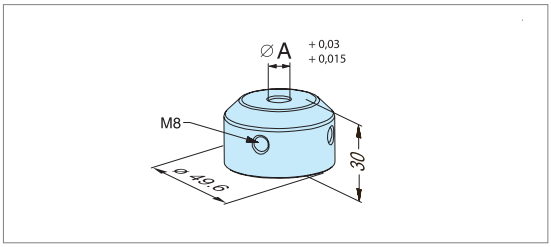

ER-009235	**Adapter ø 20mm**

Version Hydraulic holding of ø 20 mm shafts.
Application Recommended to hold the 20 mm EROWA thread holder.

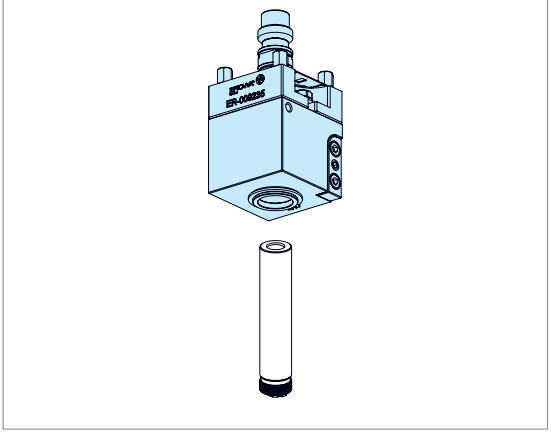

ER-033654	**Thread holder M3 P=0.5mm / ø 2.3mm / L= 100**
ER-033655	**Thread holder M4 P=0.7mm / ø 2.9mm / L= 100**
ER-033656	**Thread holder M5 P=0.8mm / ø 3.8mm / L= 120**
ER-033657	**Thread holder M6 P=1mm / ø 4.5mm / L= 120**

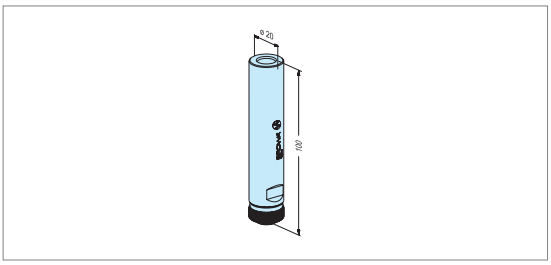

Version Ground 20 mm shaft.
Application Defined positioning of threaded EROWA electrodes.
Note Systems for M3, M4, M5 and M6.

ER-033204	**Threaded electrode M3 / L= 80**
ER-033205	**Threaded electrode M4 / L= 80**
ER-033206	**Threaded electrode M5 / L= 120**
ER-033207	**Threaded electrode M6 / L= 120**

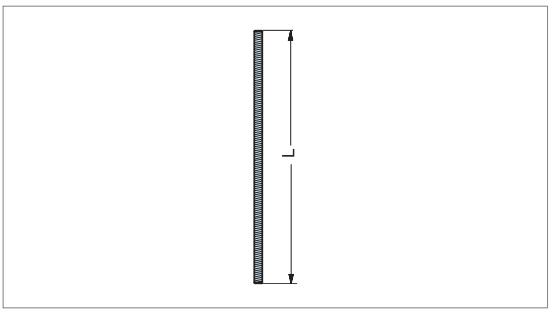

Version EDM copper with precision thread.
Application For EDM-ing threads with EROWA Thread holder System.
Note Sizes available for: M3, M4, M5 and M6.

EROWA ITS Measuring devices

The components

Trust is good - checking is better. The EROWA ITS measuring and checking elements make it easier for you to check your means of production. These measuring elements are used in chip-cutting machining, as well as in EDM and WEDM.

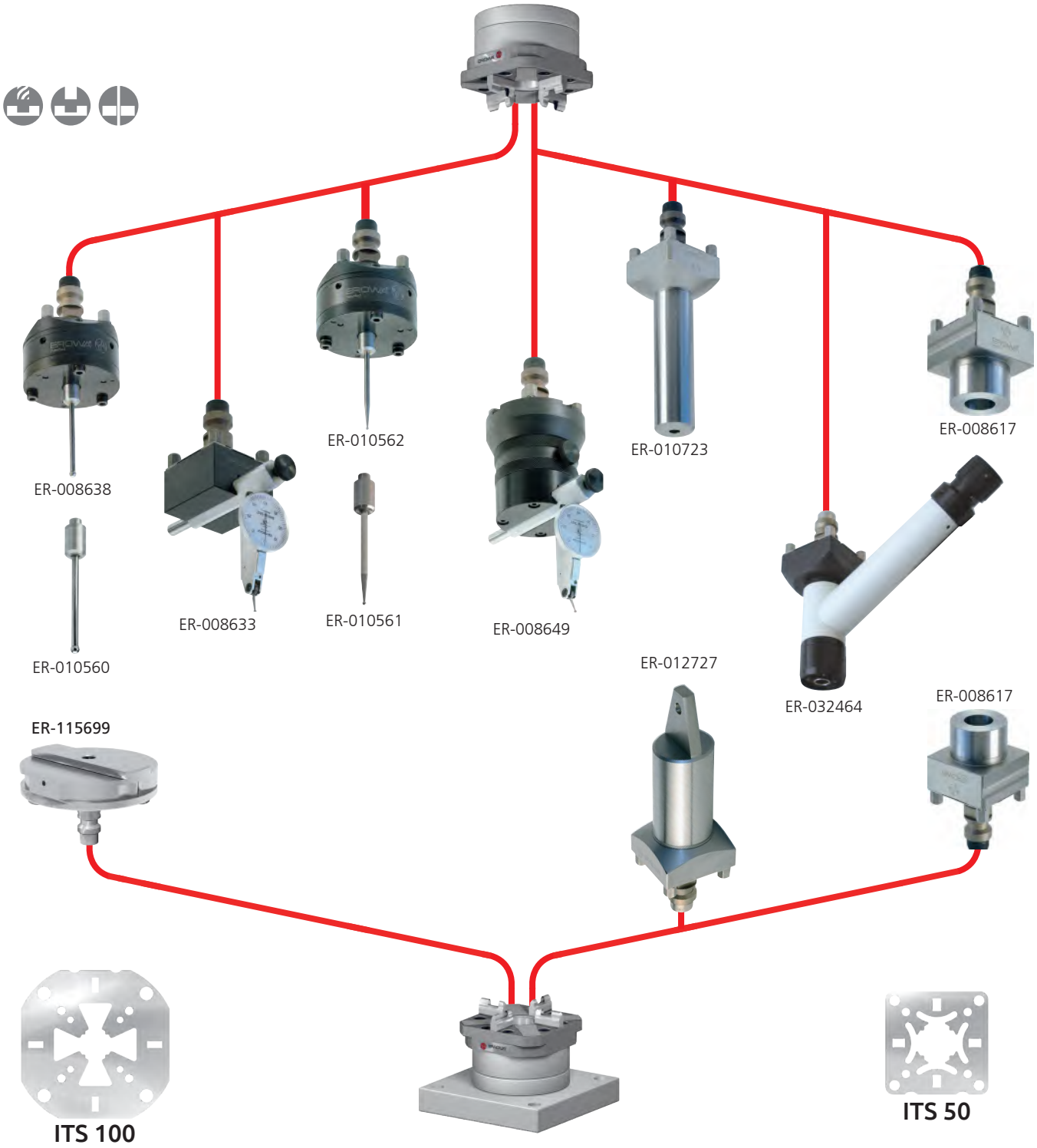

EROWA ITS

Measuring devices

ER-008638 Probe with ball ø 5mm
ER-010562 Probe with ball ø 2mm

auto

Version	Holder with spring-loaded sensing pin and tungsten carbide ball. Overrun protection: X, Y, Z 1 mm. Repetition accuracy: X, Z, Y 0.002 mm.
Application	Automatic measurement of workpieces in CNC EDM sinking centers.

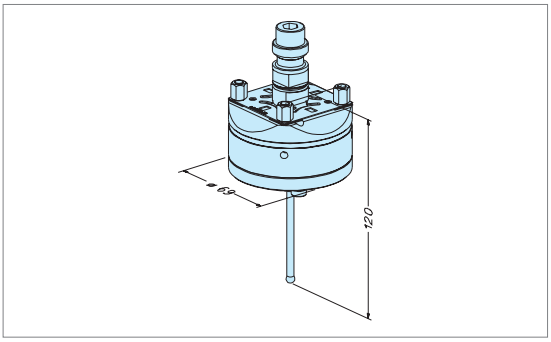

ER-010560 Replacement sensor pin ø 5mm
ER-010561 Replacement sensor pin ø 2mm

Version	Tungsten carbide, incl. adapter part, without spacer washer
Application	Replacement of pins in sensors ER-008638 and ER-010562 Attention: spacer washer is matched to the respective sensor.

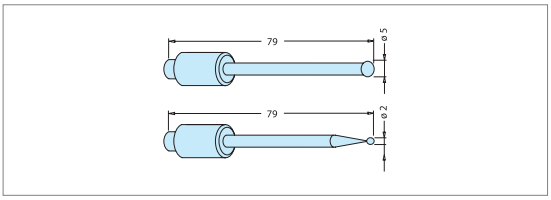

ER-010723 Checking pin 50

INOX

Version	Hardened, ground.
Application	Alignment of radial, axial and angular position of ITS chucks.

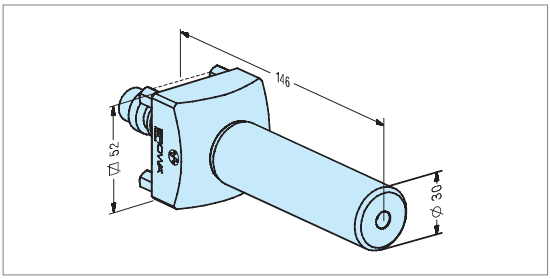

ER-008617 Gauging pin

INOX

Version	Hardened, ground.
Application	Alignment of ITS chucks in radial, axial and angular position.

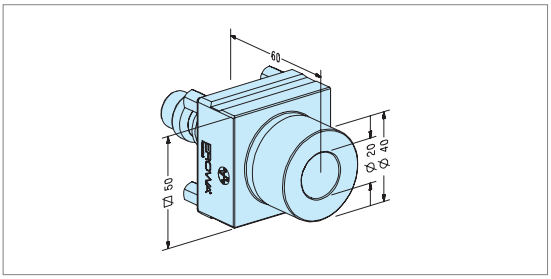

EROWA ITS

Measuring devices

ER-012727 Reference pin UnoSet

INOX

Version Hardened, ground, borehole ø 8 mm.
Application To determine reference measurements on horizontal chucks.

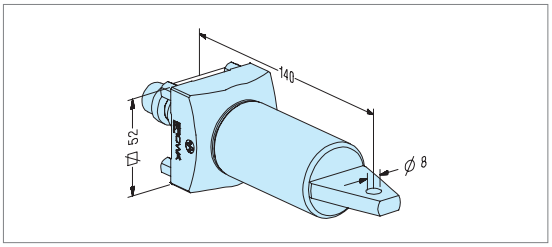

ER-008633 Fixed centering device

Version Holder with sliding part and metric dial gauge mm. Scale graduation: 0.01 mm.
Application Concentricity measurement of workpieces on machines with C-axis or rotating spindle.

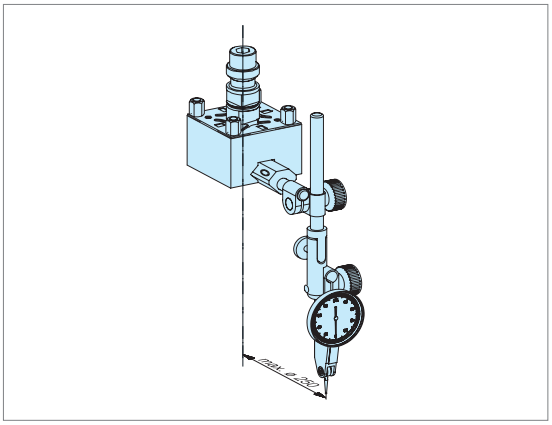

ER-008649 Rotatable centering device complete

Version Holder with rotating and sliding part, including metric dial gauge mm. Scale graduation: 0.01 mm.
Application Concentricity measurement of workpieces on machines without rotating axis.

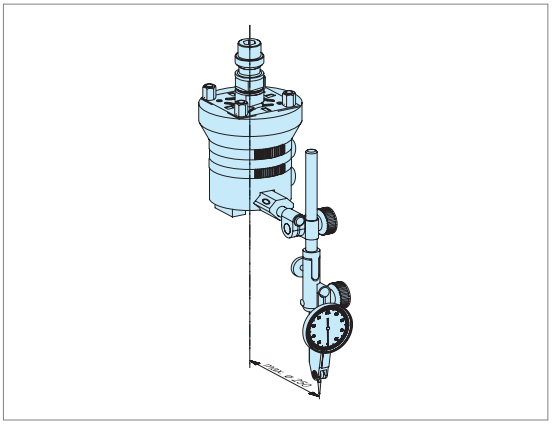

ER-115699 Alignment pallet ø 115 MS

INOX 115

Version Pallet ø 115 mm, alignment length 110 mm, center borehole ø 12 mm.
Application Alignment of radial, axial and angular position of ITS chucks, PowerChuck P and PC 210 Combi chucks.

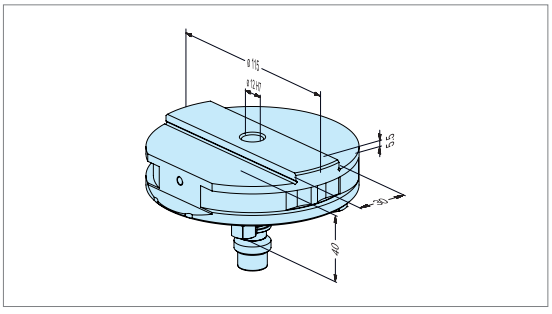

ER-032464 Microscope ITS with pointed checking pin

Version	Amplification factor: 40x Illumination: 5 V, Tansformer: 100-240 V.
Application	Determination of dimensions for complicated contours. The checking pin with tip serves for adjustment of the optical system.

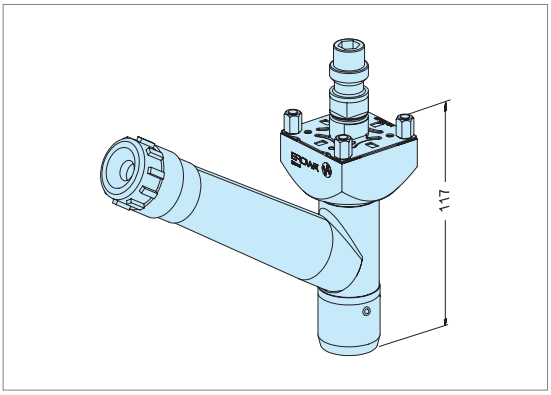

ER-001565 Dial gauge ø 38, 0.002mm

Version	Measuring range +/- 0.2 mm Graduation 0.002 mm.
Application	On PreSet setup and pre-setting cells, and on ITS centering devices.

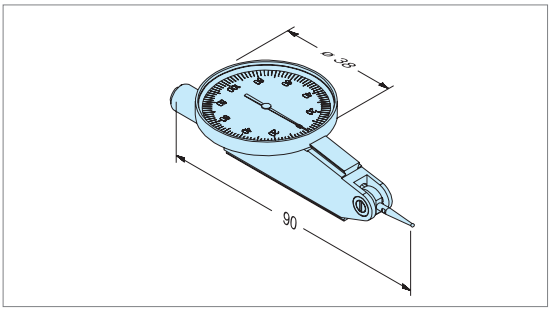

EROWA ITS Element Set

My first EROWA

We have compiled practical sets for newcomers to the modern ITS Integrated Tooling System. Additional material, consumables in particular, can be ordered according to requirements.

Starter set for newcomers, with existing ITS chuck on the EDM quill.

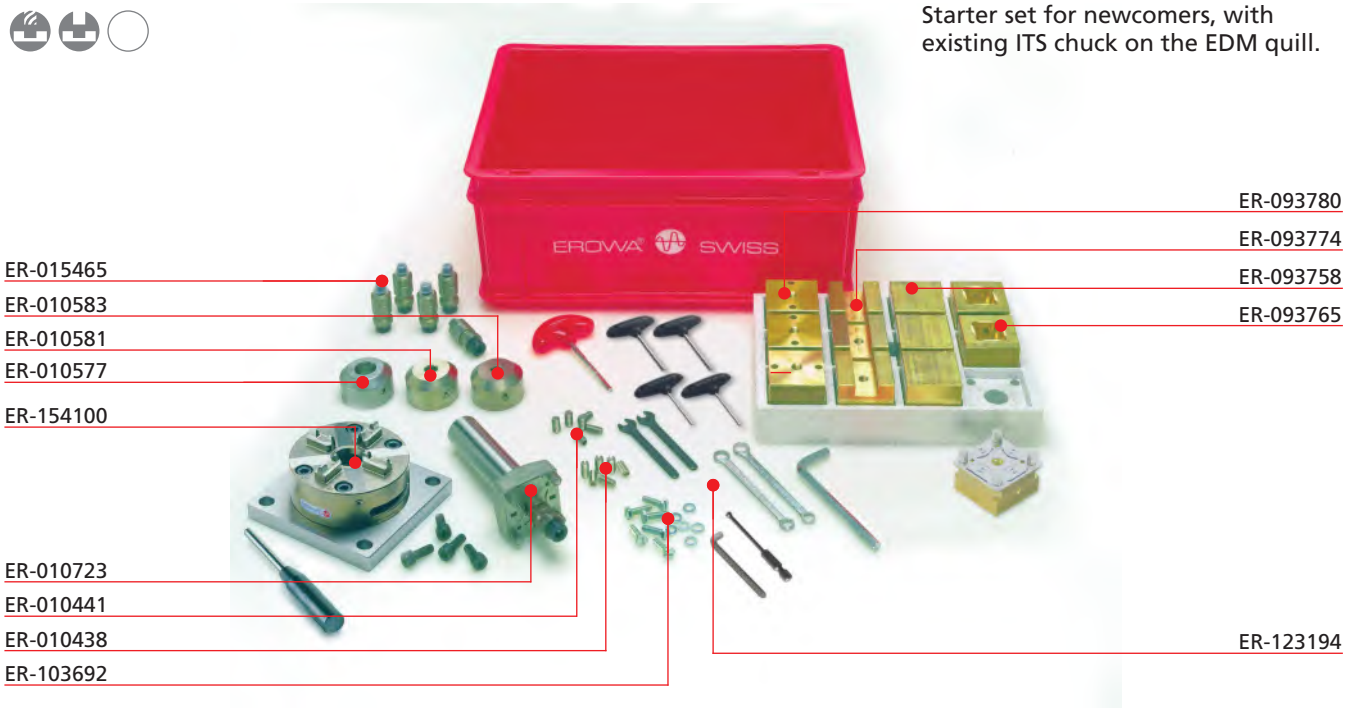

ER-103679 My first EROWA QuickChuck 100 P C

This material is packed into one solid plastic box.

Order number	Description	Units per set	Units supplied by order number
ER-093758	Uniblank C EWIS	3	12
ER-093765	Prisround C EWIS	3	12
ER-093774	Uniholder C EWIS	3	12
ER-093780	Uniplate C EWIS	3	12
ER-010438	Setscrew M8 x 16 for Prisround	6	25
ER-010441	Setscrew M8 x 16 for Uniholder	6	25
ER-010577	Blank holder ø 20 mm	1	1
ER-010581	Blank holder ø 12 mm	1	1
ER-010583	Blank holder ø 10 mm	1	1
ER-103692	Hexagon socket bolt M6 x 20 for Uniplate C	6	12
ER-010723	Checking pin	1	1
ER-123194	Tools ITS C	1	1
ER-154100	QuickChuck 100 P with base plate	1	1
ER-015465	Chucking spigot F/A EDM	5	20

EROWA ITS Element Set

EDM Set Basic

We have compiled practical sets for newcomers to the modern ITS Integrated Tooling System. Additional material, in particular consumables, can be ordered according to requirements.

User set for manual or CNC EDM centers with ITS quill chuck. The supplied chuck has been designed for manual electrode manufacturing.

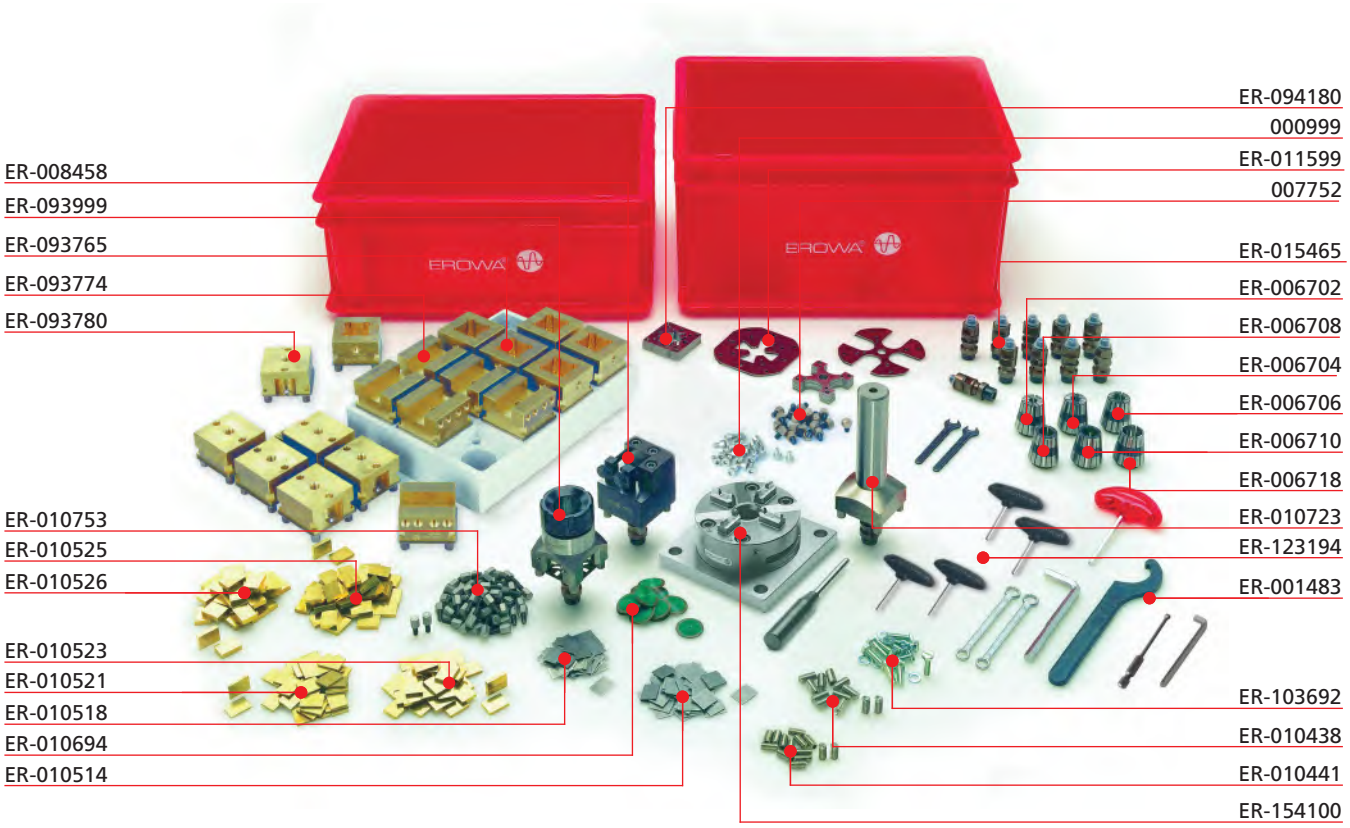

ER-103680 EDM Set Basic QuickChuck 100 P C

This material is packed into two solid plastic boxes.

Order number	Description	Units per set	Units supplied by order number
ER-000974	M10 x 20 hex socket head bolt	1	1
ER-001483	Key for collet holder 50	1	1
ER-006702	Collet ø 4mm	1	1
ER-006704	Collet ø 6 mm	1	1
ER-006706	Collet ø 8 mm	1	1
ER-006708	Collet ø 10 mm	1	1
ER-006710	Collet ø 12 mm	1	1
ER-006718	Collet ø 20 mm	1	1
ER-008458	Prism holder, stainless	1	1
ER-093999	Collet holder 50 C	1	1
ER-103687	Set of SW5 hex keys for ITS C	1	1

ER-103680 EDM Set Basic QuickChuck 100 P C

This material is packed into two solid plastic boxes.

Order number	Description	Units per set	Units supplied by order number
ER-094180	Centering plate 50 C with washer	20	50
ER-011599	Centering plate 100 M5 with washer	5	10
ER-093765	Prisround C EWIS	6	12
ER-093774	Uniholder C EWIS	6	12
ER-093780	Uniplate C EWIS	6	12
ER-010438	Setscrew M8 x 16 for Prisround	12	25
ER-010441	Setscrew M8 x 16 for Uniholder	12	25
ER-010514	Spacer plate 0,5 mm	50	50
ER-010518	Spacer plate 1 mm	50	50
ER-010521	Spacer plate 2 mm	50	50
ER-010523	Spacer plate 3 mm	50	50
ER-010525	Spacer plate 4 mm	50	50
ER-010526	Spacer plate 5 mm	50	50
ER-103692	Hexagon socket bolt for Uniplate C	12	12
ER-010694	Sealing washers	12	24
ER-010723	Checking pin	1	1
ER-010753	Support feet M5	100	100
ER-123194	Tools ITS C	1	1
ER-154100	QuickChuck 100 P with base plate	1	1
ER-015465	Chucking spigot F/A EDM	10	20
007752	M8 support foot	20	–
000999	M5 x 8 socket head bolt	20	–

EROWA ITS Element Set

EDM Standard Set

We have compiled practical sets for newcomers to the modern ITS Integrated Tooling System. Additional material, in particular consumables, can be ordered according to requirements.

User set for manual or CNC centers. Containing, among other things, 50 electrode holders and a chuck.



ER-103681 EDM Set Standard ITS C

This material is packed into two solid plastic boxes.

Order number	Description	Units per set	Units supplied by order number
000714	Setscrew M8 x 16	25	1
ER-001483	Key for collet holder 50	1	1
ER-006702	Collet ø 4 mm	1	1
ER-006704	Collet ø 6 mm	1	1
ER-006706	Collet ø 8 mm	1	1
ER-006708	Collet ø 10 mm	1	1
ER-006710	Collet ø 12 mm	1	1
ER-006718	Collet ø 20 mm	1	1
ER-103687	Set of SW5 hex keys for ITS C	1	1

ER-103681 EDM Set Standard ITS C

This material is packed into two solid plastic boxes.

Order number	Description	Units per set	Units supplied by order number
ER-012297	Rapid-action chuck, manual, on block	1	1
ER-008458	Prism holder	1	1
ER-093999	Collet holder 50 C	1	1
ER-094180	Centering plate 50 C with washer	20	50
ER-011599	Centering plate 100 M8 with washer	5	10
ER-093765	Prisround C EWIS	12	12
ER-093774	Uniholder C EWIS	6	12
ER-093780	Uniplate C EWIS	12	12
ER-010438	Setscrew M8 x 16 for Prisround	25	25
ER-010441	Setscrew M8 x 16 for Uniholder	12	25
ER-010514	Spacer plate 0.5 mm	100	50
ER-010518	Spacer plate 1 mm	100	50
ER-010521	Spacer plate 2 mm	100	50
ER-010523	Spacer plate 3 mm	100	50
ER-010525	Spacer plate 4 mm	100	50
ER-010526	Spacer plate 5 mm	100	50
ER-103692	Hexagon socket bolt for Uniplate C	24	12
ER-010694	Sealing washers	12	24
ER-010723	Checking pin	1	1
ER-010685	Supports M5, adjustable	12	12
ER-010744	Chip guard for rapid-action chuck	1	1
ER-010753	Supports M5	100	100
ER-123194	Tools ITS C	1	1
ER-015465	Chucking spigot F/A EDM	20	20
ER-022354	Seal ring for chucking spigot	10	10
007752	M8 support foot	20	–
000999	M5 x 8 socket head bolt	20	–

EROWA ITS Compact Combi

For small electrodes and workpieces

The EROWA Compact tooling system is ideal for clamping small electrodes and workpieces. EROWA's ITS Compact Combi chucks complement the range and provide universal clamping for three systems in one single chuck. No matter whether it is on the machine table or in the workpiece quill, EROWA ITS Compact Combi chucks can be used everywhere.

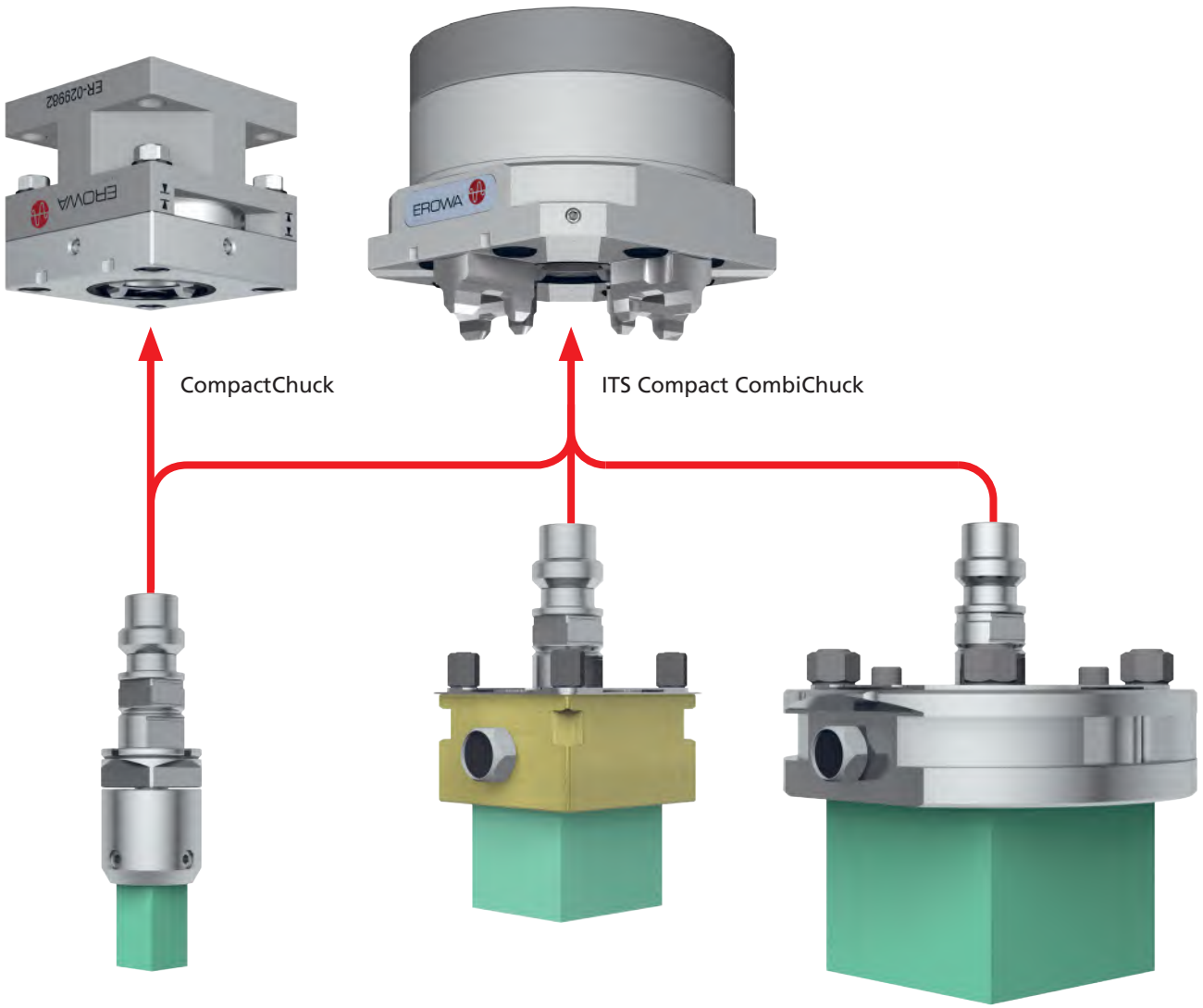

Applications

Handling

Manual / Loading facility / Robot

Function

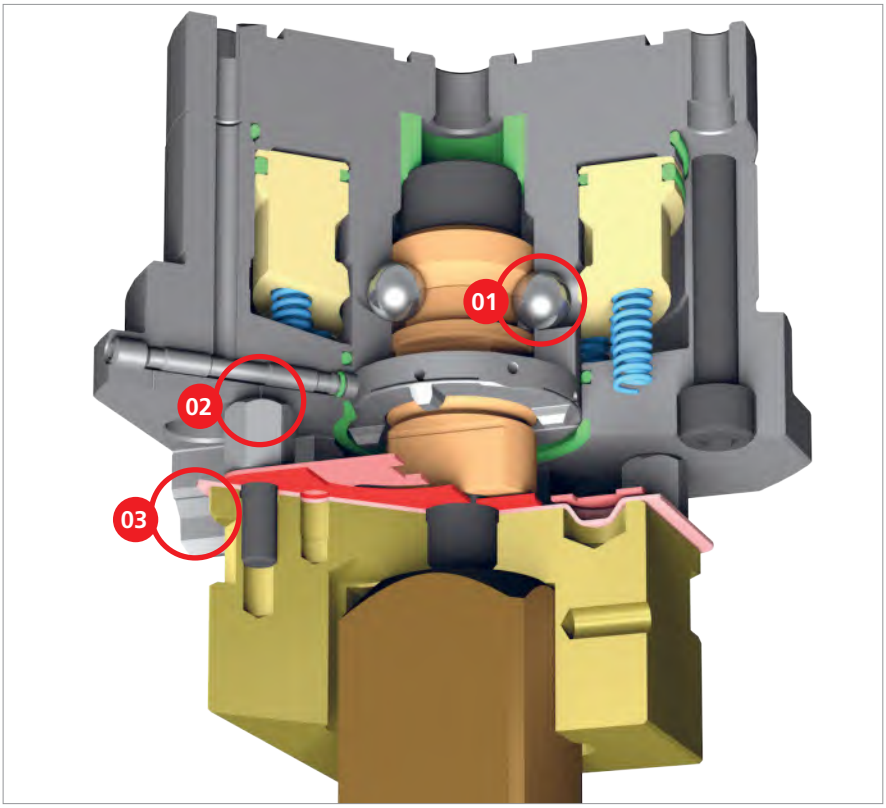

ITS Compact CombiChuck with ITS holder.

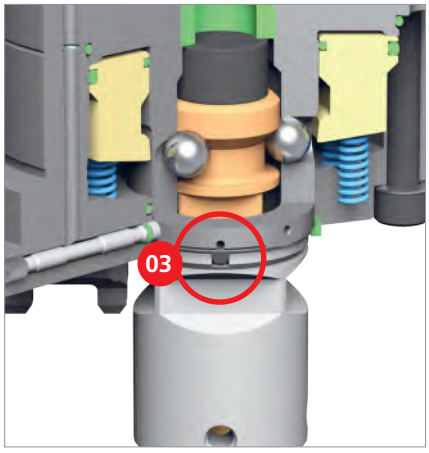

ITS Compact CombiChuck with Compact holder.

01 | Ball-lock
The self-locking ball-lock generates a clamping power of 5,000 N and does not open even if the pressure fails.

02 | Cleaning
The support feet are cleaned during the clamping process.

03 | Prismatic spigots
After latching to the centering plate, the prismatic spigots in combination with the spring slots ensure powerful and high-precision positioning.

Technical data - ITS Compact Combi Chuck

	ITS Compact CombiChuck
System sizes	Compact, ITS 50 and ITS 100
Indexing	4 x 90°
Clamping power	3,000 N, 5,000 N with reclamping
Clamping	with spring tension (clamped without pressure)
Opening pressure	min. 6 bar (pneumatic)
Operation	with manual or electropneumatic control unit

EROWA ITS Compact Combi in action

Versatile and universal

The ITS Compact Combi chucks have the same mounting hole configuration as the conventional EROWA ITS chucks and can be seamlessly integrated into the existing ITS system. The system comprises a complete range of chucks, electrode holders, electrode changers and accessories.

FACTS

- Three systems in one chuck
- Wide variety of possible applications
- Repeatability < 0.002 mm
- Workpiece carriers are divisible around 4 x 90°
- Air-cleaned Z-supports
- Can be automated





Depending on requirements, EROWA ITS Compact Combi chucks can accommodate the Compact electrode holders for small electrodes, as well as workpiece carriers from the ITS system for larger electrodes. This makes the Compact tooling system extremely flexible and universally applicable in electrode production.



The ITS Compact Combi chuck can be universally used on the machine table or in the quill.



Electrodes are directly mounted onto the Compact standard holder and can be used immediately.



Compact electrode blanks can be placed in the Compact holders without any preparatory machining. This eliminates the machining costs for setting up the electrodes and cutting them to size.

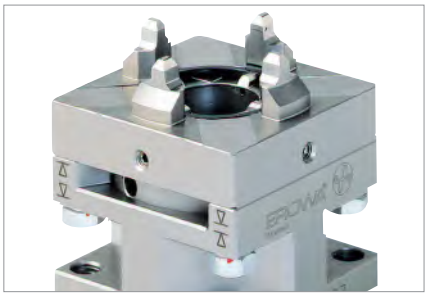

Manually operated Compact Combi chucks: to clamp EROWA electrode holders of the Compact and ITS 50 system sizes.



With the help of the Compact-ITS adapter, Compact electrode holders are quickly turned into regular EROWA ITS chucks. Electrode holders are manually clamped in the adapter with precision and speed.



The Compact electrode holders can be automated. The automatic loading/unloading of EDM centers increases economic efficiency to a considerable extent.

EROWA ITS Compact Combi

The components

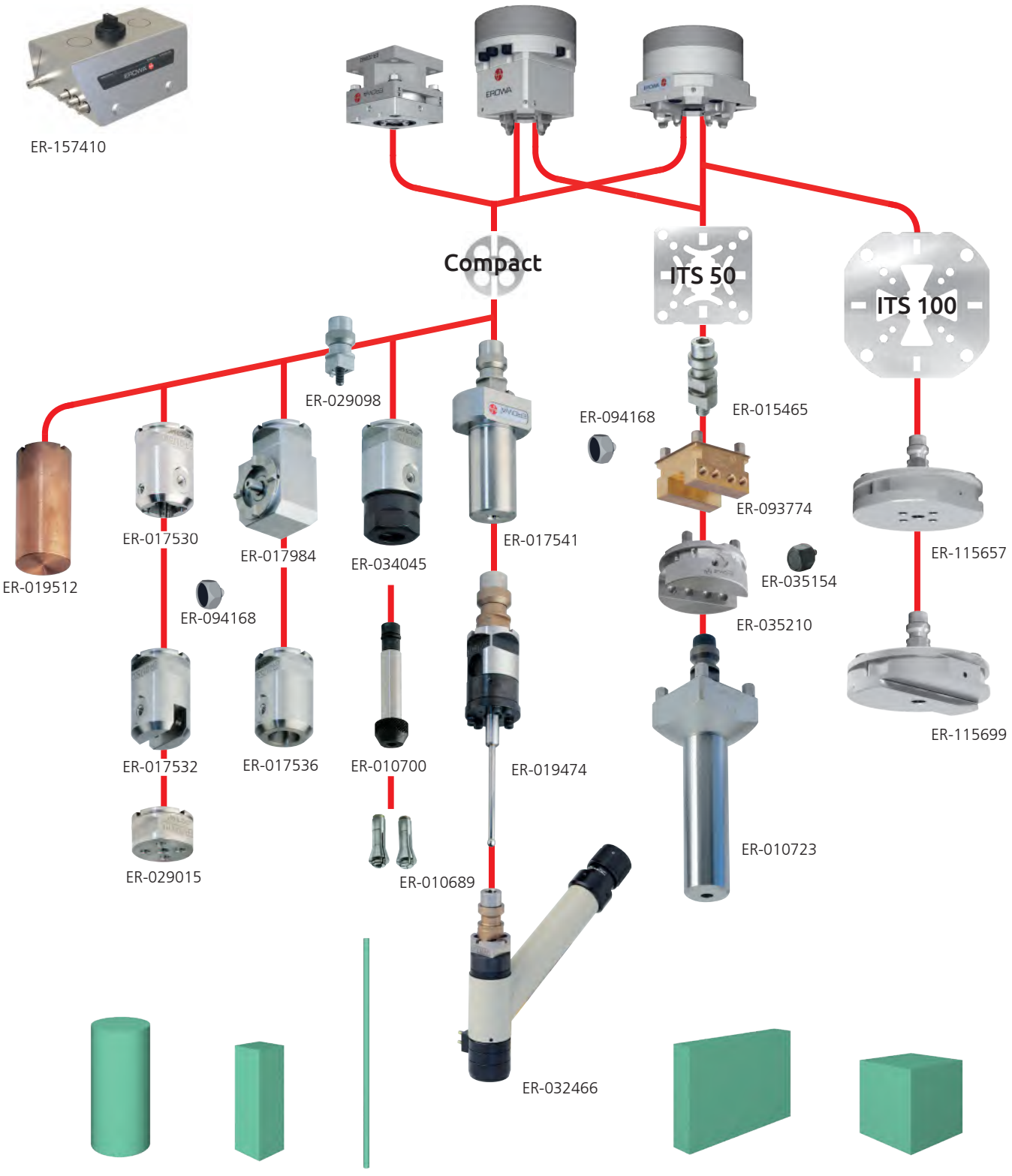

To make it easier for you to find your way about the fields of application for EROWA products, we use the following symbols in all our documents:


1. Manual operation


2. Operate with compressed air jet


3. Operate with manual valve


4. Operate with manual control unit



5. Operate with electro-pneumatic control unit


6. With central flushing clearance


7. Suited for submerged operation



8. Corrosion-resistant material



9. Suited for automatic operation


10. Handling with EROWA Robot gripper S


11. Handling with EROWA Robot gripper Combi


12. Handling with EROWA Robot gripper C



13. Handling with EROWA Robot gripper 72



14. Handling with EROWA Robot gripper 115



15. Handling with EROWA Robot gripper 148



16. Handling with EROWA Robot gripper RN PC 210


17. Handling with EROWA Robot gripper RCS


18. Handling with EROWA Robot gripper WGS-500



EROWA ITS COMPACT COMBI

ITS Compcat Combi	A survey	260
ITS Compcat Combi	ITS Compact CombiChuck	262
ITS Compcat Combi	Compact chuck	266
ITS Compcat Combi	Compact ITS Adapter	267
ITS Compcat Combi	Electrode holder	268
ITS Compcat Combi	Electrodes	270
ITS Compcat Combi	Accessories	271
ITS Compcat Combi	Measuring equipment	274
ITS Compcat Combi	Compact Electrode holder Set	276


For chip-removing processes


For EDM sinking


For WEDM

EROWA ITS Compact Combi

Chucks

ITS Compact chuck: pneumatic operation



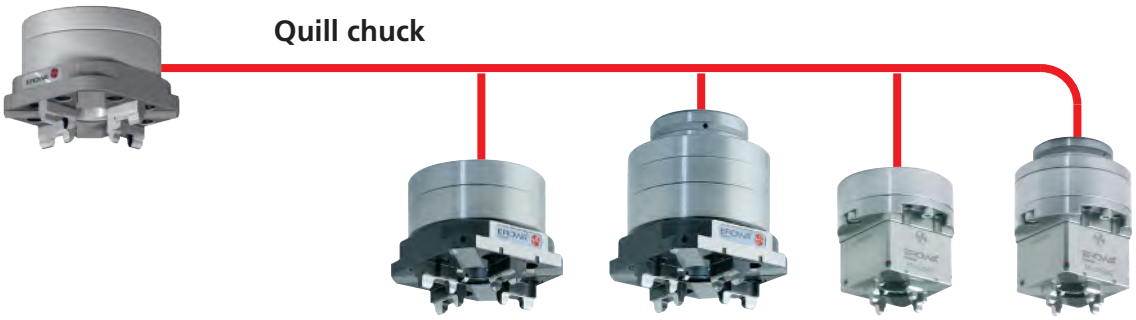

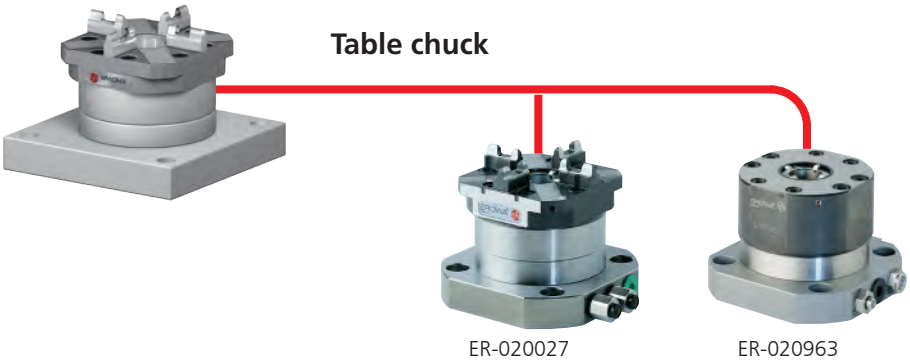

ITS Compact chuck: manual operation

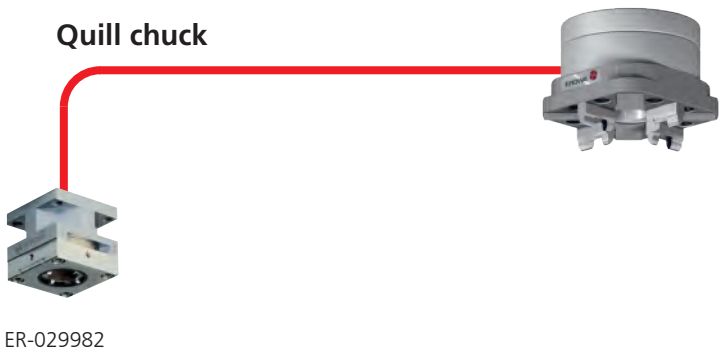

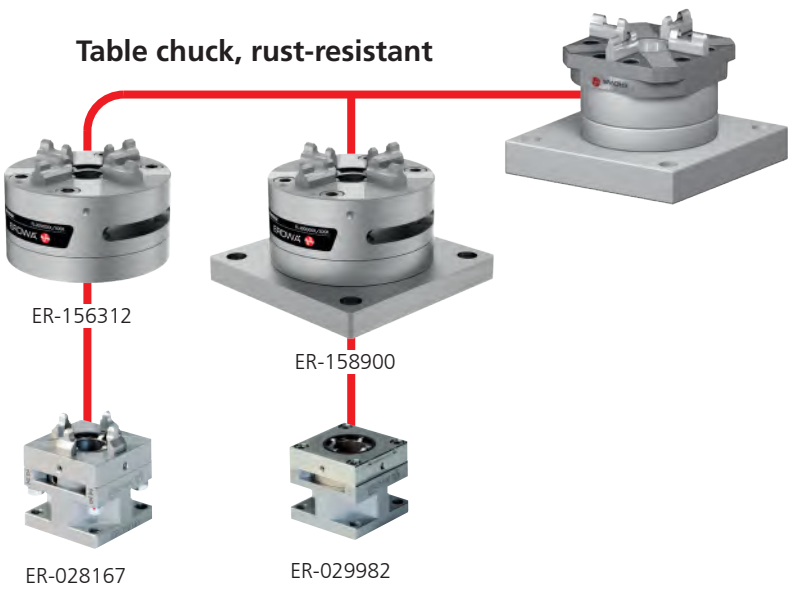

EROWA ITS Compact Combi

Chuck, pneumatic

Technical data	ITS Compact CombiChuck	ITS 50 Compact CombiChuck
Repeatability	< 0.002 mm	< 0.002 mm
Indexing	4 x 90°	4 x 90°
Clamping power	3,000 N	4,000 N
Clamping power with reclamping	5,000 N	
Clamping	with spring tension (clamped without pressure)	with spring tension (clamped without pressure)
Opening pressure (pneumatic)	min. 6 bar	min. 6 bar
Reclamping pressure (pneumatic)	min. 6 bar	
Operation	with manual or electro-pneumatic control unit	with manual or electro-pneumatic control unit

ER-020025 ITS Compact CombiChuck



Version	ITS rapid-action chuck with built-in CompactChuck.
Connections	At the rear.
Application	EDM centers with automatic electrode change, machine tools with automatic loading of ITS and Compact electrode holders.

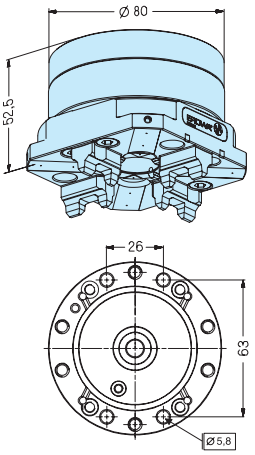

ER-020026 ITS Compact CombiChuck with collar



Version	With flange ø 80/55 mm for flushing connection.
Connections	At the rear.
Application	EDM centers with automatic electrode change of ITS and Compact electrode holders.

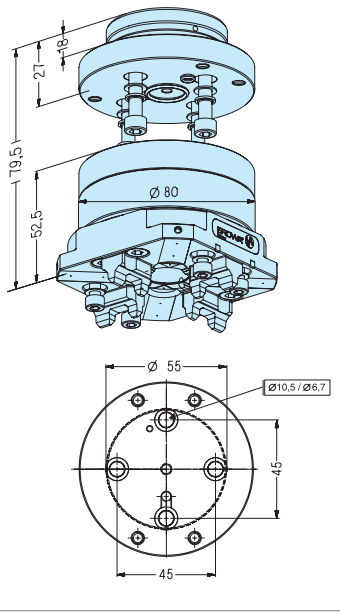

ER-035261 ITS 50 Compact CombiChuck

Version	ITS QuickChuck 50 with built-in CompactChuck.
Connections	At the rear.
Application	EDM centers with automatic electrode change, machine tools with automatic loading of ITS and Compact electrode holders.

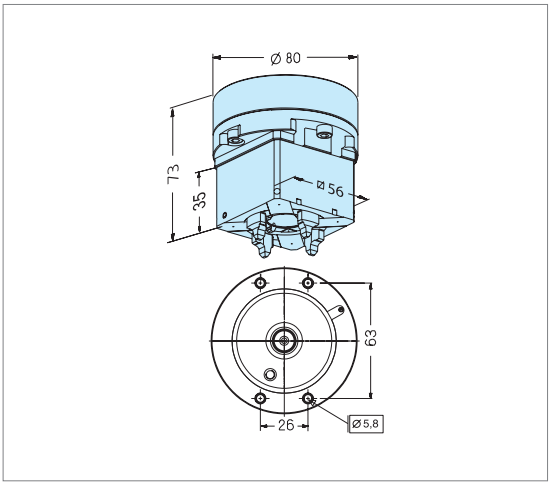

ER-035262 ITS 50 Compact CombiChuck with collar

Version	With flange ø 80/55 mm for flushing connection.
Connections	At the rear.
Application	EDM centers with automatic electrode change of ITS and Compact electrode holders.

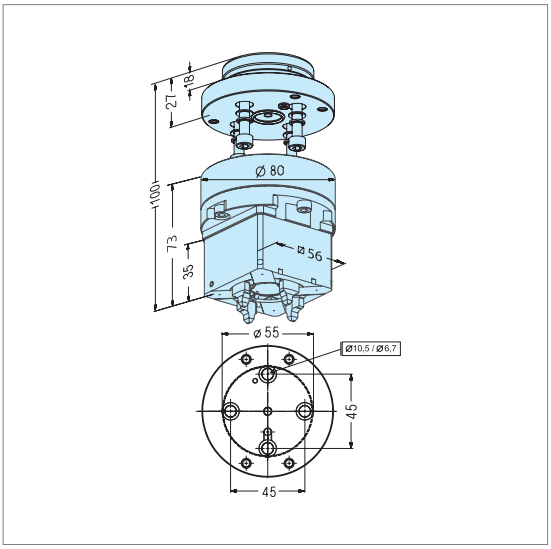

ER-020027 ITS Compact CombiChuck with base plate

Version	With base plate 106 x 106 mm.
Connections	Laterally on base plate for manual and pneumatic control unit.
Application	On milling, grinding and EDM centers with manual and automatic loading facilities.

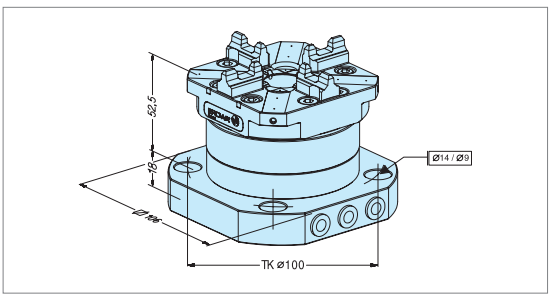

EROWA ITS Compact Combi

Chucks, manual

Technical data	QuickChuck 100 Combi	QuickChuck 50 Combi
Repeatability	< 0.002 mm	< 0.002 mm
Indexing	4 x 90°	4 x 90°
Max. clamping power	up to 10,000 N	up to 4,000 N
Operation	manual	manual

ER-022511 QuickChuck 100 Combi





Version	Combi system for EROWA ITS and Compact.
To fit	With 4 x M8 bolts.
Operation	Manual.
Application	To clamp EROWA electrode holders and pallets of the system sizes Compact, ITS 50 und ITS 100.

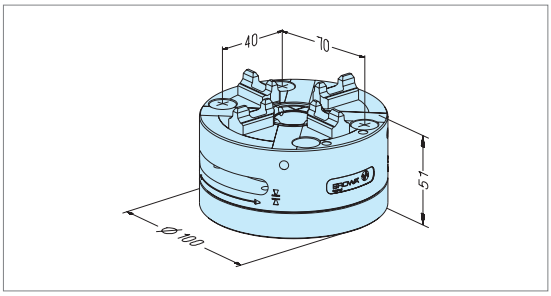

ER-022514 QuickChuck 100 Combi with base plate 125x125





Version	Combi system for EROWA ITS and Compact with base plate.
Mounting	With bolts or brackets.
Operation	Manual.
Application	To clamp EROWA electrode holders and pallets of the system sizes Compact, ITS 50 and ITS 100.

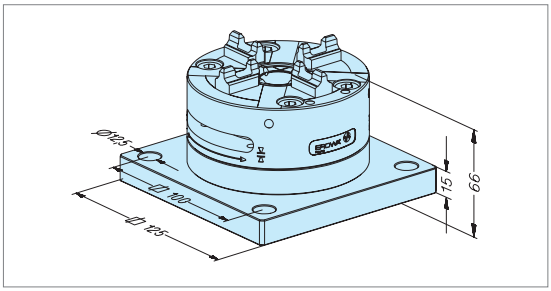

ER-028167 QuickChuck 50 Combi





Version	Combi System for EROWA ITS and Compact.
Mounting	With four M8 bolts or four M6 bolts and nuts.
Operation	Manual.
Application	Clamping of EROWA electrode holders of the system size Compact and ITS 50.

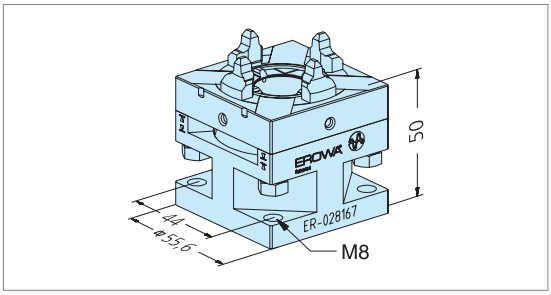

ITS Compact Combi

EROWA ITS Compact Combi

Compact chucks

Technical data	CompactChuck
Repeatability	0.002 mm
Indexing	4 x 90°
Clamping power with reclamping 6 bar (without)	5,000 N (2,200 N)
Opening with compressed air	min. 6 bar
Operation mode	PA = Pneumatic, automatic PM = Pneumatic, manual M = Manual

ER-029982 CompactChuck M





Mounting	With four M8 bolts or with four M6 bolts and nuts
Operation	Rapid-action lock with lever.
Application	Clamping of EROWA Compact electrode holders.
Note	The CompactChuck M can also be used as a quill chuck.

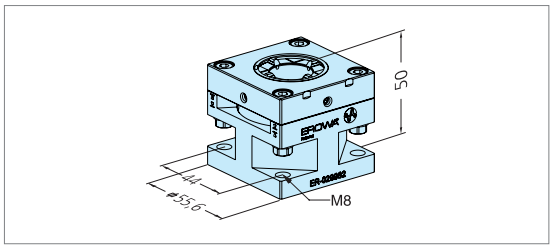

ER-020963 CompactChuck





Version	On 106 x 106 mm clamping plate.
Connections	On the side on clamping plate.
Application	On milling, grinding and EDM centers with manual operation.

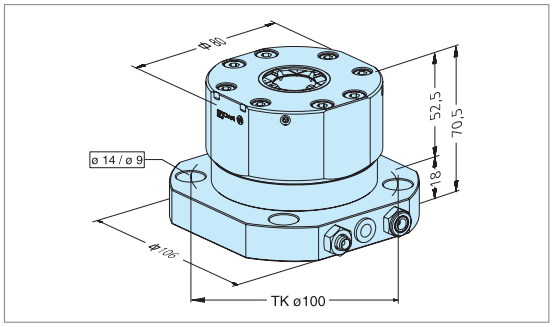

EROWA ITS Compact Combi

Compact ITS Adapter

ER-094046 Compact ITS 50 adapter C

Version	ITS system size 50, lock with central locking bolt. Prepared to accommodate chip holder for EWIS chip.
Operation	Tighten central locking bolt.
Application	System adapter Compact - ITS.

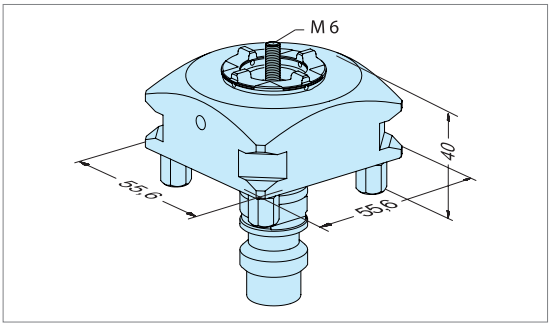

ER-094063 Compact ITS adapter chuck C

Version	ITS system size 50 C, QuickChuck action for Compact holders.
Operation	Quick locking mechanism with lever.
Application	Individual Compact chuck for machines which are equipped with standard ITS. System adapter Compact - ITS.

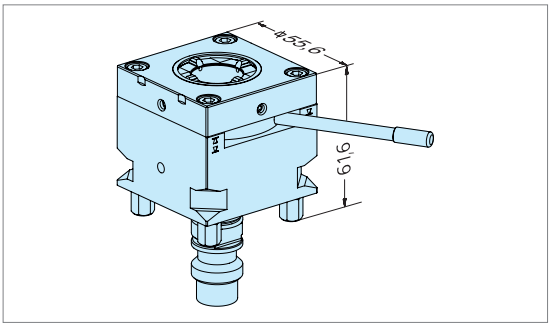

ER-029988 Compact ITS angle adapter

Version	ITS System size 50, QuickChuck locking mechanism of 90° angle chuck.
Operation	Quick locking mechanism with lever.
Application	Systeme adapter Compact - ITS.

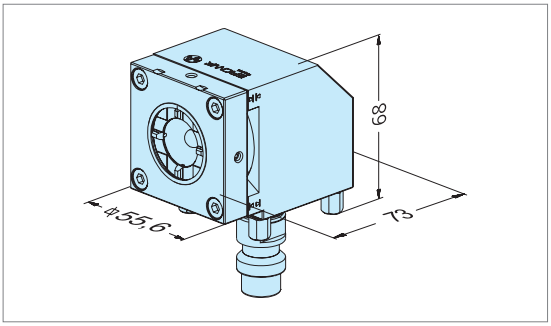

ER-036272 Compact ITS Adapter ø 72

Version	ITS system size 50 ø 72. Lock with central locking bolt. Prepared for chip holder identification system.
Operation	Tighten central locking bolt.
Application	System adapter Compact - ITS 50 ø 72 mm.

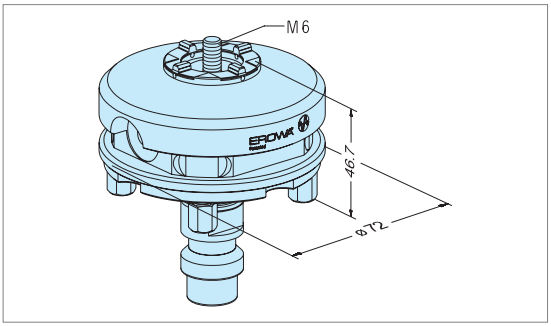

EROWA ITS Compact Combi

Electrode Holder

ER-017532	**Compact Uniholder 18 pieces**

INOX auto

Version: Set of 18 units. Without chucking spigot.
Application: To hold blanks up to 8 mm width.
To fit blank: Insert and tighten M5 bolts.

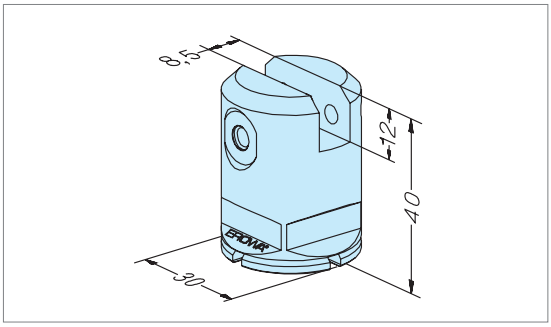

ER-017529	**Compact Prisround 10mm 18 pieces**
ER-017530	**Compact Prisround 15mm 18 pieces**

INOX auto

Version: Set of 18 units. Without chucking spigot.
Application: To hold blanks with shaft of up to X = 10 mm square (ER-017529), up to X = 15 mm square (ER-017530).
Mounting: Insert and tighten M5 bolts.

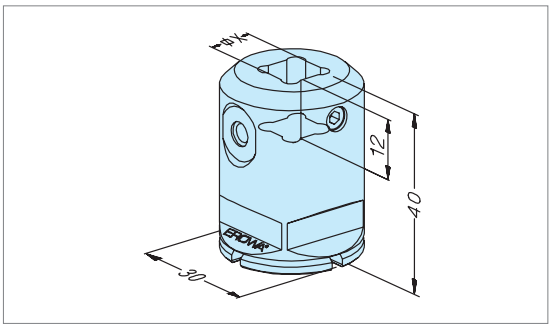

ER-034045	**Compact Collet Chuck Holder 1 piece**

INOX auto

Version: One unit.
Application: To hold cylindrical parts with respective diameter.
Please note: Order collect chucks ER 16 (no INOX) separately.

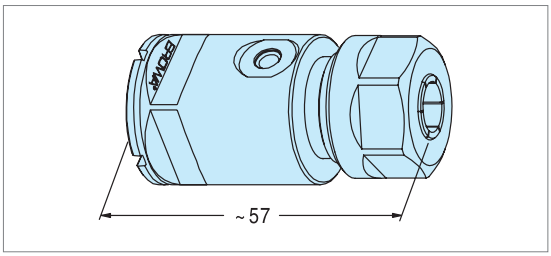

ER-002394	**Collet chuck ER16 ø 2mm**
ER-002395	**Collet chuck ER16 ø 3mm**
ER-002396	**Collet chuck ER16 ø 4mm**
ER-002397	**Collet chuck ER16 ø 5mm**
ER-002398	**Collet chuck ER16 ø 6mm**
ER-002399	**Collet chuck ER16 ø 7mm**
ER-002400	**Collet chuck ER16 ø 8mm**
ER-002401	**Collet chuck ER16 ø 9mm**
ER-002402	**Collet chuck ER16 ø 10mm**

Version: Clamping range 1 mm per collet chuck. Fits Collet Chuck Holder ER-034045. Option: Sealing ring ER-005064.

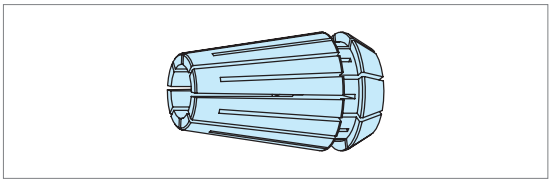

ER-017533	**Compact electrode holder 8mm 18 pieces**
ER-017534	**Compact electrode holder 10mm 18 pieces**
ER-017535	**Compact electrode holder 12mm 18 pieces**
ER-017536	**Compact electrode holder 16mm 18 pieces**





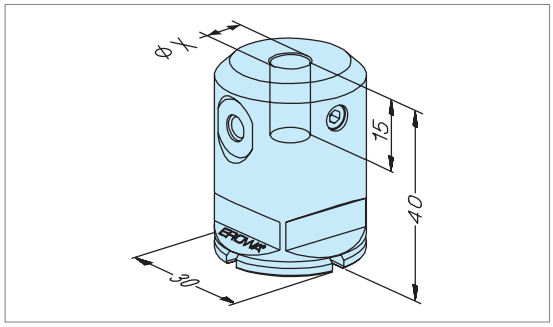

Version Set of 18 units.
Without chucking spigot.
Application To hold cylindrical parts with respective diameter.
Mounting Insert and tighten M5 bolts.

EROWA ITS Compact Combi

Electrodes

ER-019512 **Compact electrode ø 30 x 60**
12 pieces, without gripper groove

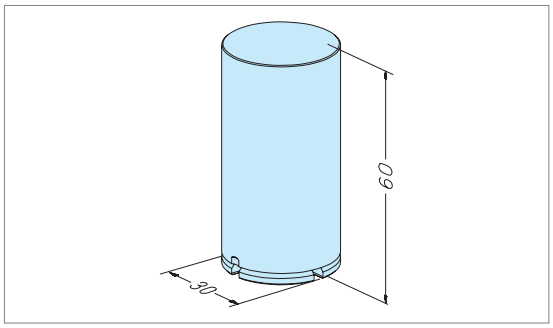

Version	Electrode copper. Set of 18 units. Without chucking spigot.
Application	To produce electrodes up to ø 30 mm.

ER-030161 **Compact electrode 10 x 10 x 45 copper**
36 pieces

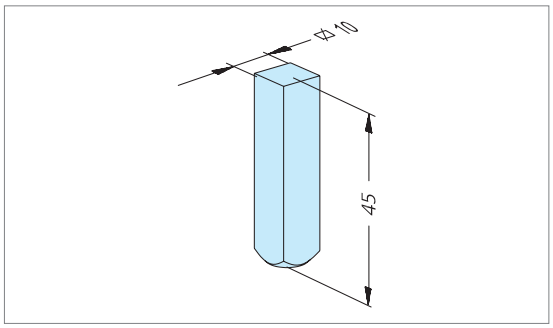

Version	Electrode copper. Set of 36.
Application	Production of electrodes of up to 10 x 10 mm.

EROWA ITS Compact Combi

Accessories

ER-017982 Compact extension 100mm



Version	Shaft ø 30 x 100 mm.
Application	Extends the electrode by 100 mm.
Operation	Lock via central bolt through shaft.

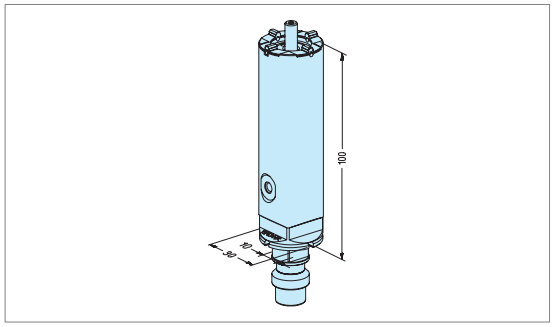

ER-017984 Compact angle chuck



Version	Compact Chuck at 90° angle.
Operation	Central locking bolt.
Application	Change from vertical to horizontal machining position.

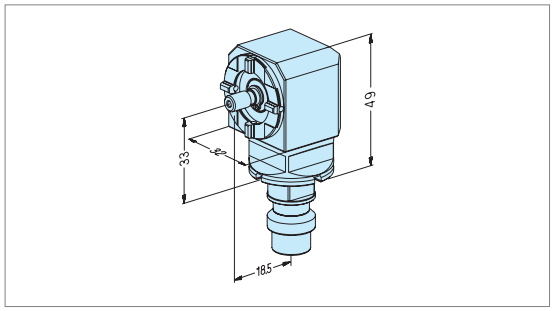

ER-029015 Compact standard holder H=16 20 pieces



Version	Set of 20 per package, without chucking spigot.
Application	To fit electrodes and workpieces.
Note	Attach blank through the center with the chucking spigot bolt or through the holder with four M4 bolts (option ER-023125, 100 M4 x 14 socket head bolts).

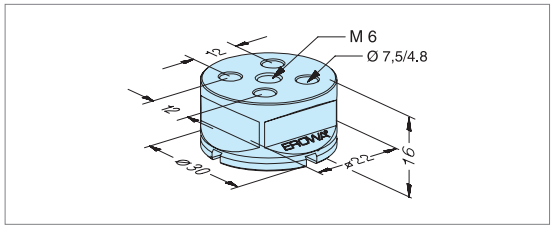

ER-029098 Chucking spigot Compact Combi 20 pieces



Version	Set of 20.
Application	To accommodate all the compact electrodes and electrode holders in CompactChucks, ITS-Compact-CombiChucks and electrode changers. For handling with the EROWA Combi gripper.

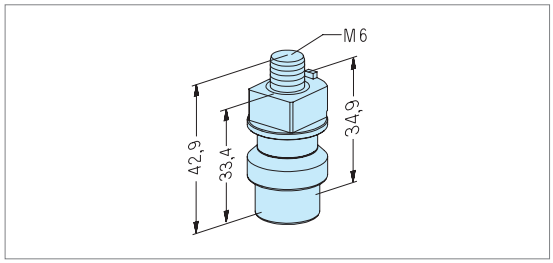

EROWA ITS Compact Combi

Accessories

ER-051968 **Chucking spigot clip open electroconductive / 20 pieces**

INOX auto

Version	Synthetic, set of 20. Electroconductive.
To be fitted	to ITS chucking spigot F/A.
Application	To fit on ITS chucking spigot F/A. To load/unload ITS electrodes and electrode holders with EROWA Combi gripper.

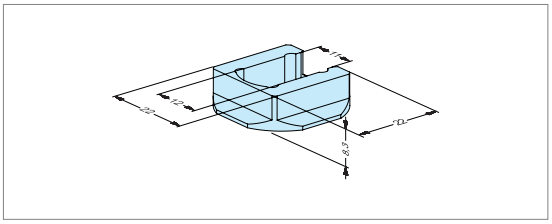

ER-051969 **Chucking spigot clip closed electroconductive / 20 pieces**

INOX auto

Version	Synthetic, set of 20. Electroconductive.
To be fitted	to ITS chucking spigot F/A.
Application	To fit to ITS chucking spigot F/A. To load/unload ITS electrodes and electrode holders with EROWA Combi gripper.

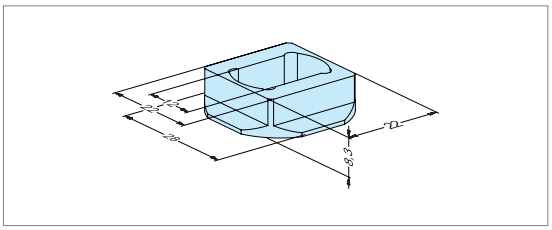

ER-020958 **Compact system stand 24-fold 10 pieces**

Version	Styrene, set of 10.
Application	Storage and transport of 24 parts each. Compact electrodes ø 30 mm, with fitted Compact chucking spigot.

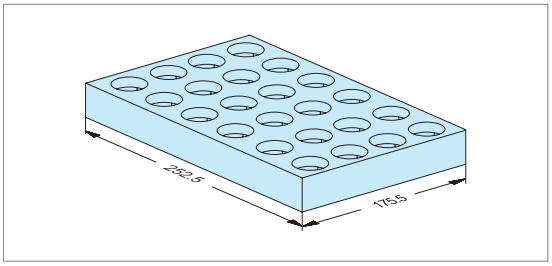

ER-094168 **EWIS™ rapid chip with holder SW14 Length 8mm (grey)**

Version	Sleeve fitting with built-in data carrier. EWIS Rapid chip: read only.
Application	In any EROWA electrode holder and pallet which has been prepared for it.

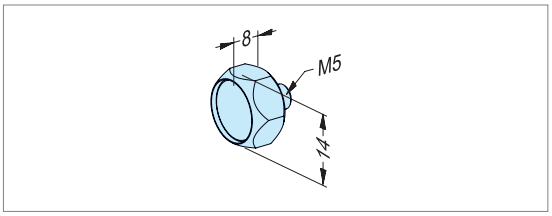

ER-035154 **EWIS™ rapid chip with holder SW14 Length 13mm**

Version	Sleeve fitting with built-in data carrier. EWIS Rapid chip: read only.
Application	In any EROWA electrode holder and pallet which has been prepared for it.

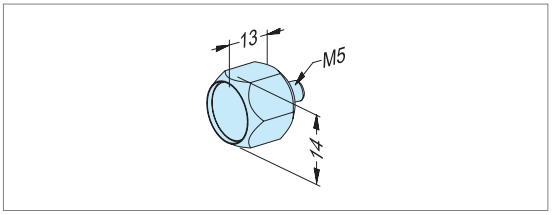

ER-022921 Chip guard for CompactChuck 10 pieces

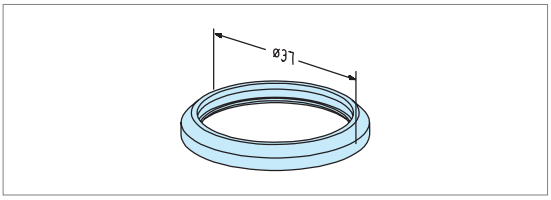

Version Rubber seal to attach to Compact ITS adapters. Set of 10.

Application Protects Compact ITS adapter and prevents the intrusion of liquids and chips. To be used in combination with sealing ring ER-022922.

ER-022923 Chip guard for CombiChuck 10 pieces

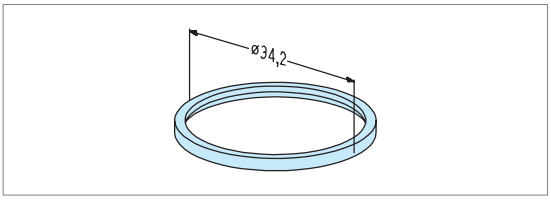

Version Plastic seal, set of 10.

Application Protects Compact chucks and prevents the intrusion of liquids and chips. To be used in combination with sealing ring ER-022922 or Combi sealing ring ER-022924.

ER-022922 Sealing ring for Compact holder 50 pieces

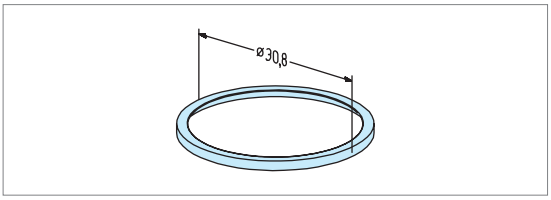

Version Rubber seal, set of 50.

Application To be fitted to Compact holder. In combination with chip guards ER-022921 or ER-022923, this prevents the intrusion of liquids and chips into the CompactChuck and the CombiChuck.

ER-022924 Combi sealing ring / ITS chucking spigot 20 pieces

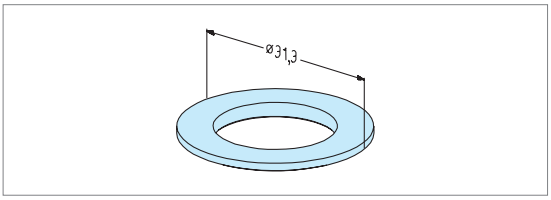

Version Plastic seal, set of 20.

Application To be fitted to ITS chucking spigots. In combination with the chip guard ER-022923, this prevents the intrusion of liquids and chips into the CombiChuck.

EROWA ITS Compact Combi

Measuring equipment

ER-019979 Compact centering equipment fixed

Version: Holder with slide and metric dial gauge.
Gradation: 0.01 mm.

Application: Centric alignment of workpieces on machines with C-axes or rotation spindles.

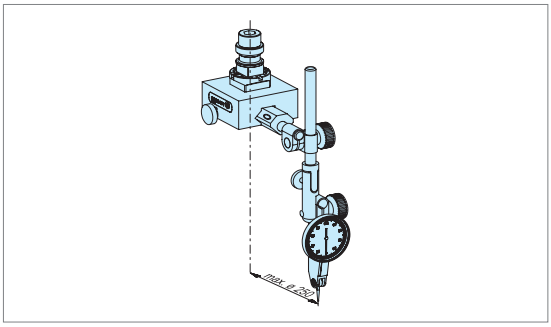

ER-019951 Compact centering equipment rotate

Version: Holder with slide and metric dial gauge.
Gradation: 0.01 mm.

Application: Centric alignment of workpieces on machines without rotation axis.

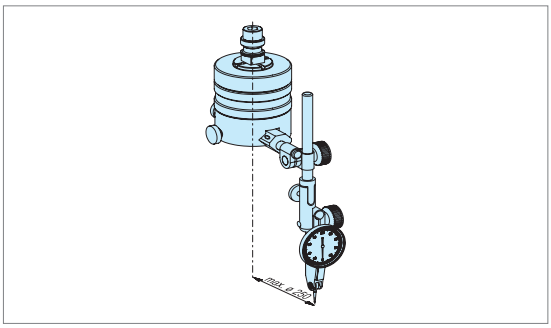

ER-017541 Compact checking pin

INOX

Version: Hardened, ground, corrosion-resistant.

Application: To align radial, axial and angular position of Compact chucks.

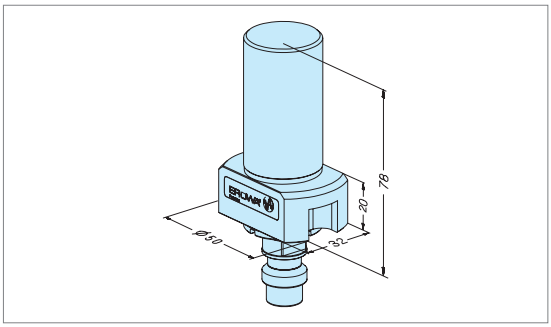

ER-019473 Compact probe with ball ø 2 mm

ER-019474 Compact probe with ball ø 5mm

auto

Version: Version with spring-mounted probe and carbide bolt.
Overrun protection: X-, Y-, Z-axes, 0.3 mm.
Repeatability: X-, Y-, Z-axes, 0.002 mm.

Application: Automatic measuring of workpieces in CNC EDM centers.

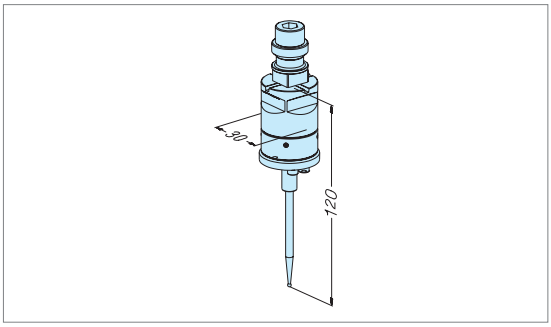

ER-032466 Compact Microscope with pointed checking

Version	Magnification: 40x Supply voltage: 12 Volt Lighting: 6 Volt Adapter: 110/220 Volt.
Application	Determination of measurements on complicated contours. The pointed checking pin serves to adjust the optic position.

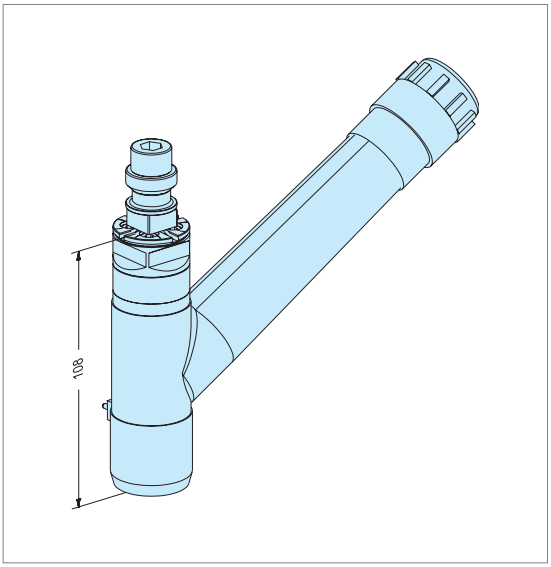

EROWA ITS Compact Combi

Compact Electrode holder Set

We have compiled a helpful set for the introduction of the EROWA Compact System. Additional material, in particular consumable parts, can be ordered according to your requirements.



ER-018858 Compact Electrode holder Set

The material is packed in a practical plastic box.

Article number	Description	Number of units in the set	Number supplied according to article number
000682	Stud bolt M5 x 8	4	1
018293	Stud bolt M5 x 10	12	1
018294	Stud bolt M5 x 6	16	1
ER-017529	Compact Prisround 10 mm	4	18
ER-017530	Compact Prisround 15 mm	4	18
ER-017532	Compact Uniholder	2	18
ER-017533	Compact Electrode holder ø 8 mm	2	18
ER-017535	Compact Electrode holder ø 12 mm	2	18
ER-017536	Compact Electrode holder ø 16 mm	2	18
ER-029015	Compact Standard holder	6	20

Order chucking spigots according to requirements.

ITS Compact Combi

EROWA ITS Auxiliary Equipment

Chuck operation

ER-001846 Air jet

Version	Plastic, smooth regulation of air flow, connection 1/4'', inside thread.
Application	Operation of manual chucks.
Note	Not suitable for operating MTS+ and MTS81.
Option	Volume and pressure reduction to air jet (ER-087668). Pressure build up is reduced if Air Jet is not pushed against an air valve.

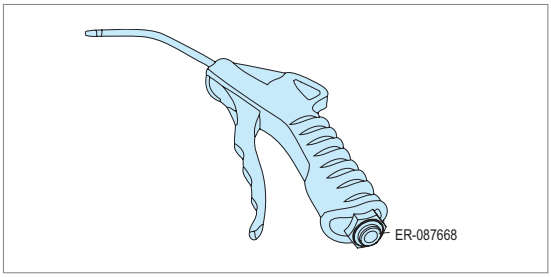

ER-010538 Manual valve

Version	Lever valve, incl. 2 m hose and coupling fittings A and B.
Application	Operation of chucks with an air connection for opening.
Note	Connecting thread M10x1.

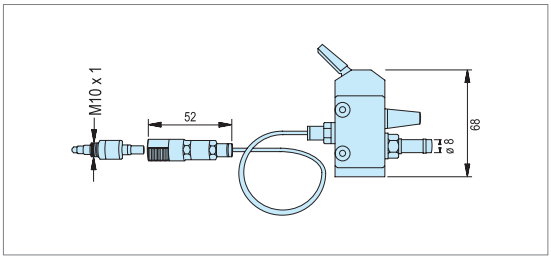

ER-011598 Rapid-action coupling chuck side (A)

Version	Fast coupling for compressed air.
Application	Screw into a suitable EROWA chuck. Cf. manual.
Note	For connecting thread M10x1.

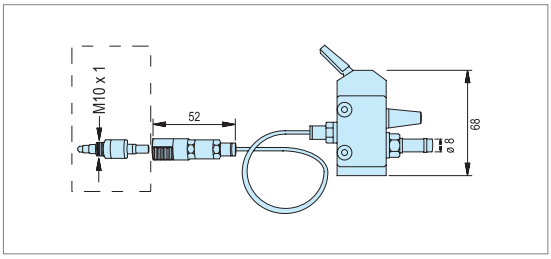

ER-011597 Rapid-action coupling hose side (B)

Version	Fast coupling for compressed air
Application	For use on the air supply

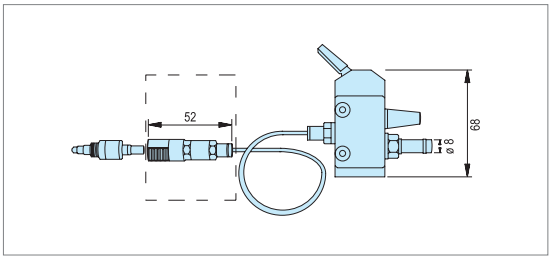

ER-157411 Control box 2-fold

Version	Manual control box for a maximum of 2 chucks. To control the opening / reclamping / cleaning functions. Pressure adjustable. Includes a set of tubes.
Connections	1 input (P IN) and 4 outputs (P2 Open / P2.2 Open P3 Clean / P4 Reclamp).
Application	To operate chuck types ITS, ITS Compact, CombiChuck, PowerChuck P, VPC, UPC or PM Tooling.

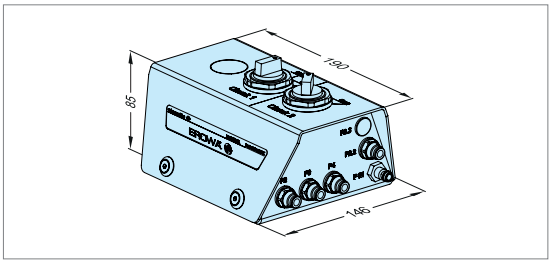

ER-157409 Booster box

Version	Booster with a maximum loading ratio of 1:2. Pressure adjustable, display through a manometer.
Connections	1 input (P IN) and 2 outputs (P OUT High (boosted) / P OUT Low (network pressure)). All connections with fast couplings for tube inside ø mm.
Application	To ensure the required pneumatic pressure in case of deficient network pressure and pressure fluctuations.
Please note	To be integrated in the air circuit near the user.

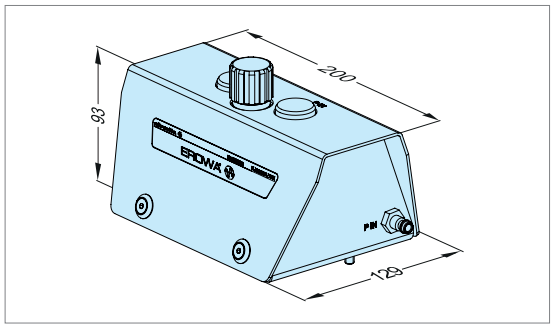

ER-011362 Twin rotatable pneumatic connector
ER-011412 Triple rotatable pneumatic connector



Version	Neutral connection flange. Three air ducts. Max. speed: 6000 rpm. Max. operating pressure: 10 bar.
Application	Air supply for ERWOA chucks on rotatable spindles.
Operation	Only operate when machine is idle.

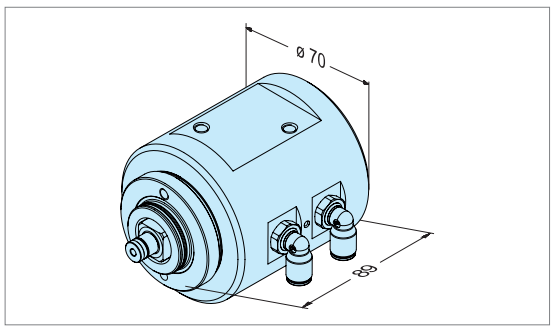

ER-070445 Control unit with monitoring

Version	Electropneumatic valve. Outputs for chucks: opening/cleaning/reclamping. 24 V, incl. mounting accessories and 3 m connection hose.
Application	Operation and monitoring of machine-integrated chucks, for instance through the CNC M-function.

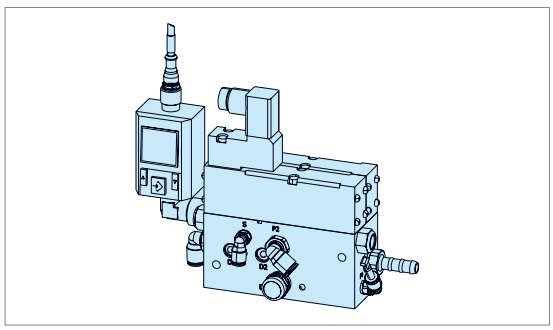

EROWA ITS Auxiliary Equipment

Toolroom accessories

ER-010906 Set of tools

Application
A = Box wrench 8/10 mm for supporting feet M5
B = Key 8 mm for chucking spigot
C = Key with handle 4 mm
D = Key with handle 3 mm
E = Screwdriver for slotted screws in Uniplate
F = Open-end wrench 8 mm



ER-123194 Tool kit ITS C

Application
A = Hexagon key SW 3
B = Hexagon key SW 4
C = Hexagon key SW 8
D = Double-ended ring wrench SW 8/10
E = Open-ended wrench SW 8
F = Ball-point hexagon key SW5
G = Offset screwdriver SW5



ER-011600 Torque wrench

Version
Torque range 2.5 up to 25 Nm, inc. 3, 4, 5, 6 mm key and one WS 8 mm bit.
Application
Service and fitting work on ITS system parts.



ER-010532 Spacer plate 300 pieces

Version
6 x 50 plates. Corrosion-resistant.
Thicknesses from 0.5 mm to 5 mm.
Application
Centering of blanks in electrode holders.

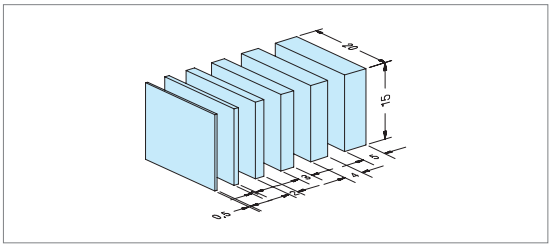

ER-010514 Insert plates 0.5mm 50 pieces
ER-010518 Insert plates 1mm 50 pieces
ER-010521 Insert plates 2mm 50 pieces
ER-010523 Insert plates 3mm 50 pieces
ER-010525 Insert plates 4mm 50 pieces
ER-010526 Insert plates 5mm 50 pieces

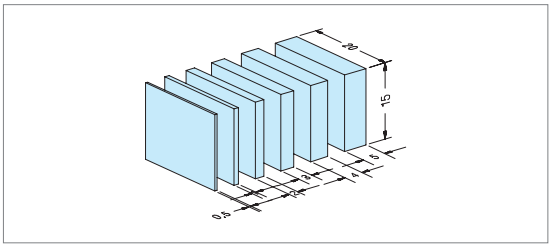

ER-013913 System stand 10 pieces

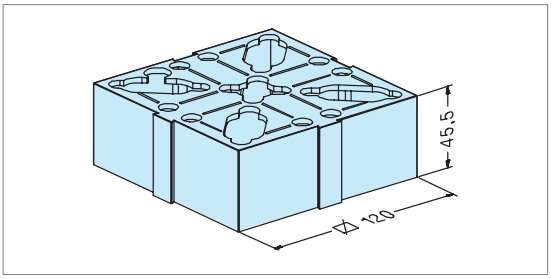

Version Plastic, set of 10.
Application As a rack for four electrode holders 50 or a pallet ø 115/148 mm.
Please note System racks can be stuck together without any gaps, e. g. to be stored in drawers.

ER-010661 Carrier fork for electrode changer

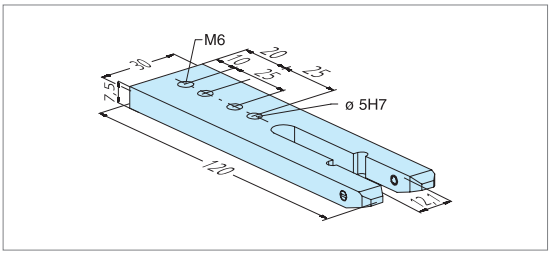

Version Steel, hardened, ground.
Application To build simple electrode changers, suitable for ER-007521 and ER-007523.

ER-024808 Pick-up fork Combi

INOX

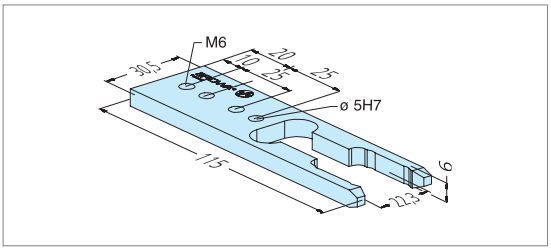

Version Corrosion-resistant steel.
Application To make simple electrode changers suitable for chucks ER-020025 and ER-020026.

ER-022457 Supporting foot SW13 / L=16/L1=11.4 20 pieces
ER-008547 Support foot SW13/L=16/L1=10.2 20 pieces
ER-008553 Support. foot SW13/L=21/L1=10.2 20 pieces

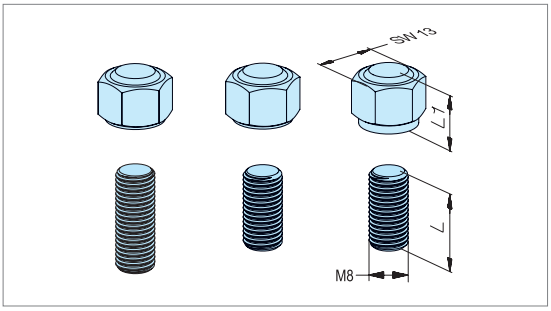

Version Supporting foot SW13, including M8 threaded pin, rust-resistant.
Application Replacement of damaged supporting feet on EROWA pallets ø 148 G and on workpieces, fixtures and gauges of your own manufacture. ER-008553: to fit centering plate G. ER-02247: to fit outside centering plate G on older pallet types (for instance ER-015777). ER-008547: to fit centering plate 100 M8 punched, or to fit outside centering plate G on newer pallet types (for instance ER-115308).

ER-010744 Chip guard 50 x 50mm, ø 120 mm for rapid-action chuck

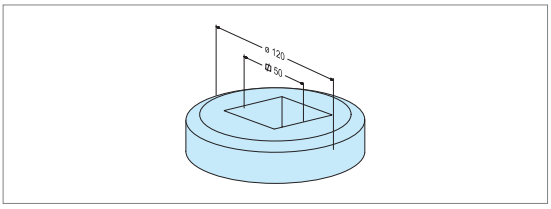

Application On Uniplate, Prisround and all other standardholders.

EROWA ITS Auxiliary Equipment

Toolroom accessories

ER-022355 Sealing ring for ITS chucking spigot 50 pieces

Application: Set of 50 sealing rings. Sealing between chucking spigot and Rapid-action chuck.

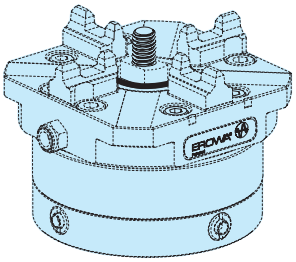

ER-094168 EWIS™ rapid chip with holder SW14 Length 8mm (grey)

Version: Sleeve fitting with built-in data carrier. EWIS Rapid chip: read only.
Application: In any EROWA electrode holder and pallet which has been prepared for it.

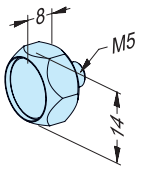

ER-035156 EWIS™ rapid chip with holder long

Version: Holder with built-in datacarrier. EWIS™ Chip: read only.
Application: With EROWA Collet Chuck holders and Square 15/25 holders.
Mounting: With supplied M4 bolts.

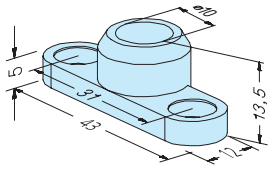

ER-035294 EWIS™ Rapid chip with chip holder RCS with chip ø 3 x 13.5mm

Version: Holder with built-in data carrier. EWIS chip: read only.
Application: To build into RCS coupling, PalletSet W holder and Basic WEDM holder.

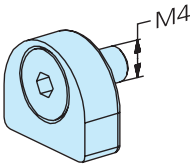

ER-035154 EWIS™ rapid chip with holder SW14 Length 13mm

Version: Sleeve fitting with built-in data carrier. EWIS Rapid chip: read only.
Application: In any EROWA electrode holder and pallet which has been prepared for it.

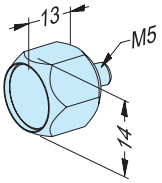

ER-010694 Sealing washer 24 pieces

Application: Set of 24 washers. Insertion in Prisround for sealing on central flushing.

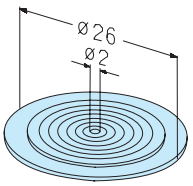

EROWA ITS Auxiliary Equipment

Spare parts

ER-009007 Viton sealing 18.5/12x9mm 10 pieces

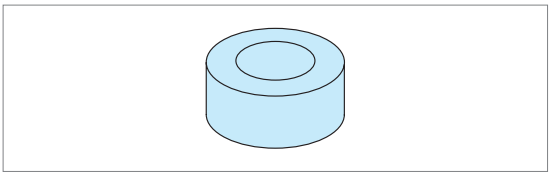

Version	Set of 10 seals.
Application	To fit ITS rapid-action and PowerChuck.

ER-013062 Repair kit for ITS chuck

ER-015985 Repair kit for ITS chuck INOX

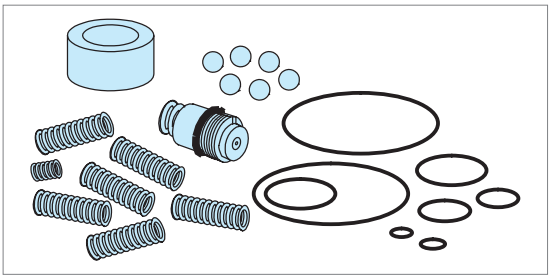

Version	All the wear parts of ITS rapid-action chucks.
Application	Dismantle chuck according to instructions supplied, replace parts.
Please note	Every chuck is supplied with instructions. Please keep in a safe place.

ER-162574 Repair kit ITS Chuck 100 P

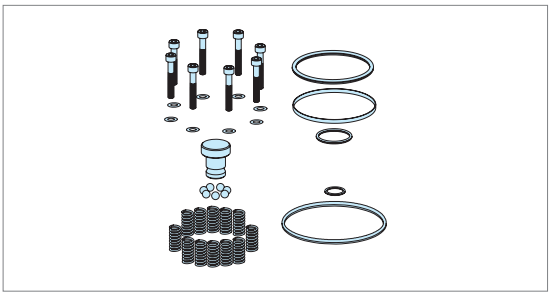

Version	All the wearing parts for ITS chuck P ER-037970, ER-035519, ER-155100, ER-155102 and others.
Application	Dismantle chucks according to operating manual, replace parts.
Please note	Each chuck is supplied with an operating manual. Please keep it in a safe place.

ER-162575 Repair kit ITS chuck 100 P Inox

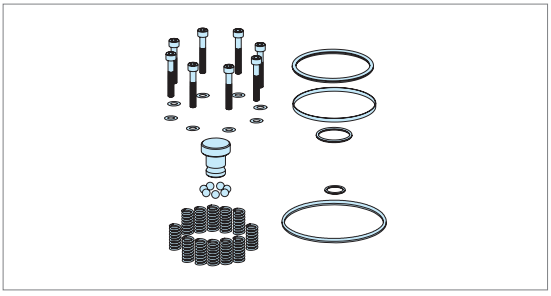

Version	All the wearing parts fore ITS 100 P Inox chucks ER-043123, ER-043124, ER-155200, ER-155202 and others.
Application	Dismantle chuck according to operating manual, replace parts.
Please note	Each chuck is supplied with an operating manual. Please keep it in a safe place.

ER-043353 Repair kit QuickChuck 100P

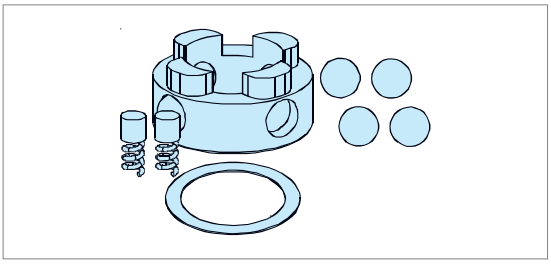

Version	All the wearing parts for QuickChuck 100P, ER-036345, ER-038824, ER-150800, ER-154100 and others.
Application	Dismantle chuck according to instructions supplied, replace parts.
Please note	Every chuck is accompanied by an instruction manual. Please keep it in a safe place.

EROWA Wire EDM Tooling

The modular tooling system for WEDM purposes

EROWA tooling systems make WEDM centers considerably more flexible and productive. Down-times can be virtually eliminated. The machines can work round the clock.
Our program contains system components for newcomers, for those who would like to extend the use of ITS, and for top-end users. You define the framework and you are bound to win.

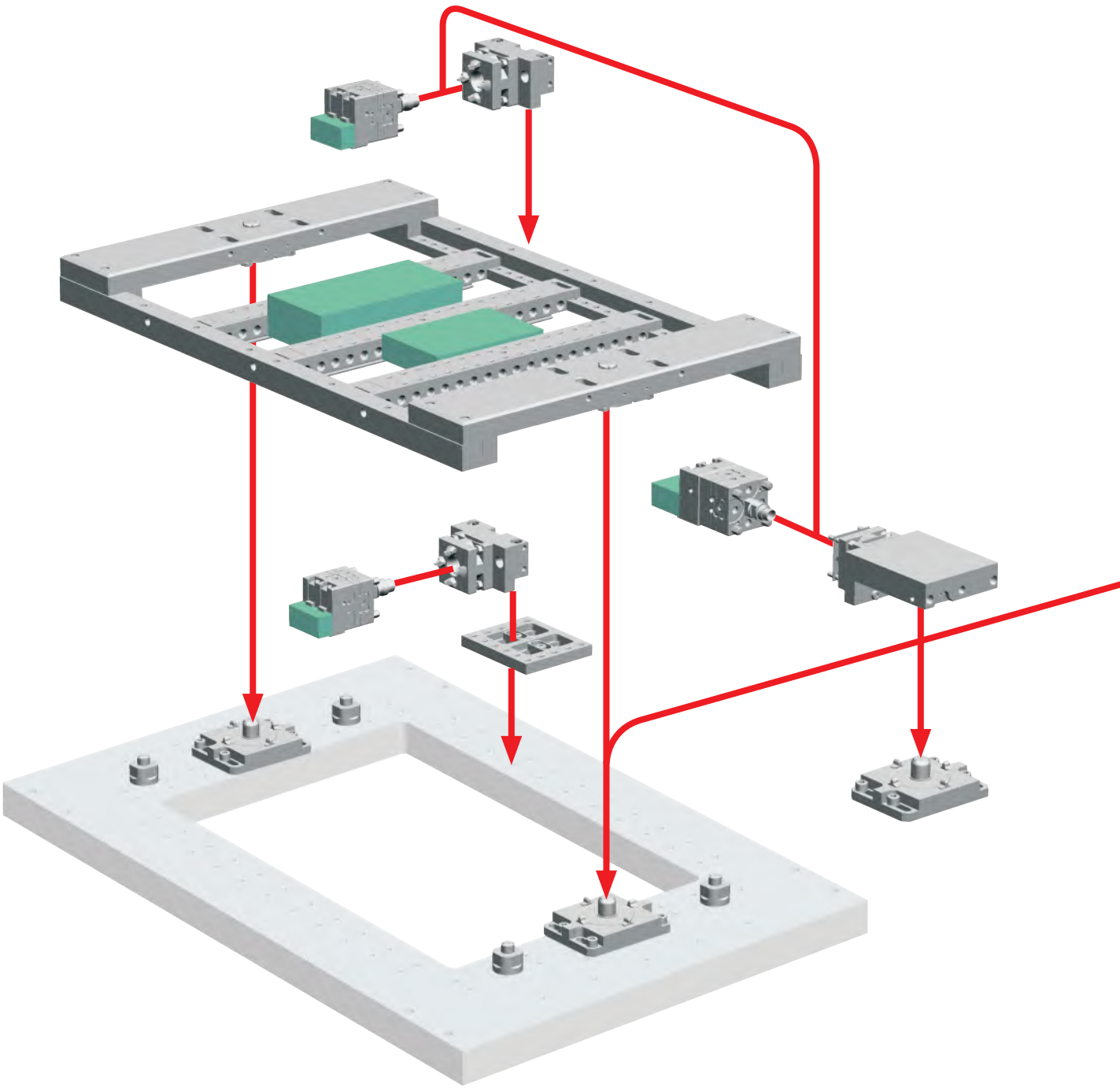

Applications

Handling

Manual / Loading facility / Robot

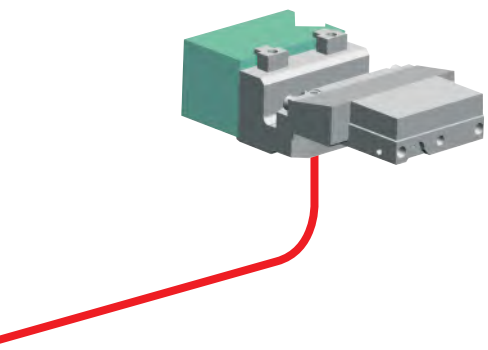

Technical data - Wire EDM Tooling

	Flat clamping chuck		Chuck RSA 50	QuickChuck 50 RSM
	pneumatic	manual		
Repeatability	< 0.002 mm	< 0.002 mm	< 0.002 mm	< 0.002 mm
Indexing			4 x 90°	4 x 90°
Clamping power	with reclamping	without reclamping		
	7,000 N	3,000 N	2,800 N	4,000 N
Clamping process	Spring tension	manually	Spring tension	Spring tension
Opening, compressed air	min. 6 bar		min. 6 bar	
Operation	pneumatically	manually	pneumatically	manually
Max. weight of pallet	30 kg	30 kg		
	(with support)	(with support)		

EROWA Wire EDM Tooling

Quick and precise resetting

With well-thought-out combinations of vises, clamping elements and clamping beams, any conceivable workpiece can be clamped. The repeatability of EROWA's Wire EDM tooling system allows for workpieces to be preset outside the machine and for safe automatic loading. Ongoing jobs can be interrupted for express jobs and then continued later.



FACTS

- Modular tooling system
- Single-part and multiple-part palletizing
- Clamping element repeatability of < 0.002 mm
- WEDM basis kits for all commonly used WEDM machines
- Can be automated with EROWA handling facilities

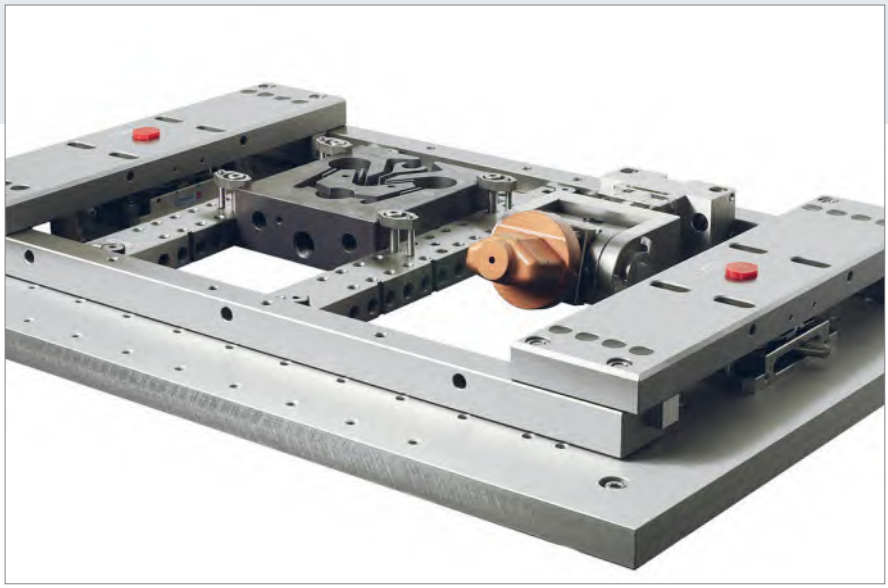

Multiple-part palletizing in the clamping frame.
The workpieces to be machined are attached to clamping beams which are individually placed in a clamping frame. In this way, workpieces of various dimensions are positioned in the same clamping frame, and a variety of jobs can be completed in the same clamping process.

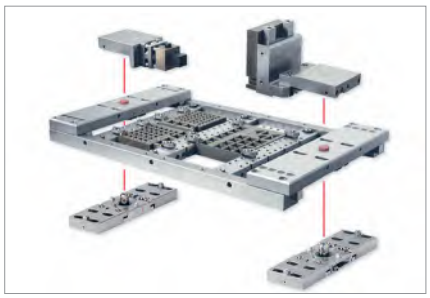

EROWA flat chucks on the machine table constitute the flexible interface for single-part palletizing or for multiple-part palletizing in a clamping frame.



Everything fits - there are suitable and flexible clamping elements for every size and type of workpiece. The workpiece to be machined is attached to the clamping element with brackets.



The prism clamping element for cylindrical parts. When fitted to the pendulum holder, the workpiece can be adjusted in three axes.



EDM electrode holders can also be integrated into the EROWA Wire EDM tooling system with speed and precision, and without a hitch.



The next job is prepared while the machine is productively at work. Machining time is substantially reduced since no set-up work has to be done on the machine.



Thanks to the fact that WEDM machines are loaded/unloaded automatically, the proportion of productive hours is substantially boosted. We'll be glad to provide you with advice for a suitable EROWA automation solution.

EROWA Wire EDM Tooling

The components

Clamping elements
for fixtures

ER-033958 

ER-031952 

ER-062788 

ER-008231 

ER-008875 

ER-008873 

ER-007990 

ER-008220 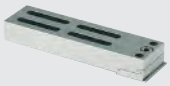

Fixtures
for adapters

ER-018940 

ER-019248 

ER-031179 

ER-031945 

ER-017645 

ER-030110 

ER-018941 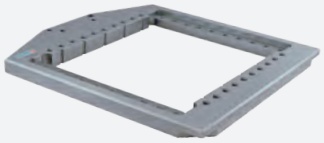

ER-025115 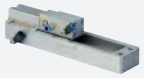

Adapters
for interfaces

ER-041179 

ER-035294 

ER-035156 

ER-033955 

ER-031942 

ER-039214 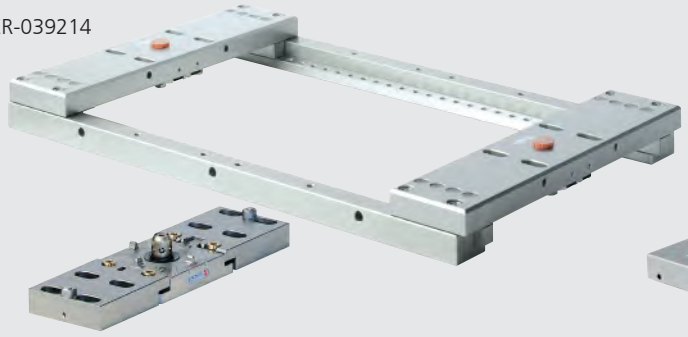

ER-055158 

Interfaces
to machine table

ER-040641 



ER-008221



ER-029229



ER-029228



ER-025895



ER-054922



ER-018938

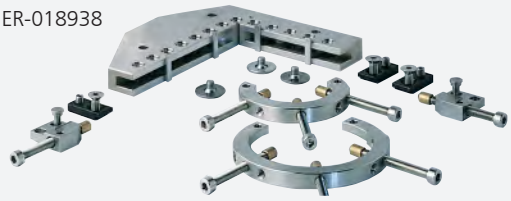

ER-038891



ER-018937



ER-055774



ER-051800



ER-008814



ER-008842



ER-052091



ER-038710



ER-033974



ER-007935



ER-008856



ER-016691



ER-030678

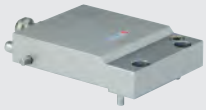

ER-039795



ER-014722



ER-014698



ER-055535



ER-030923



ER-033933



ER-012727



ER-007877



ER-038711



ER-028471



ER-035714



ER-035715



ER-017198



ER-007852



ER-022583



EROWA Wire EDM Tooling

Tooling System

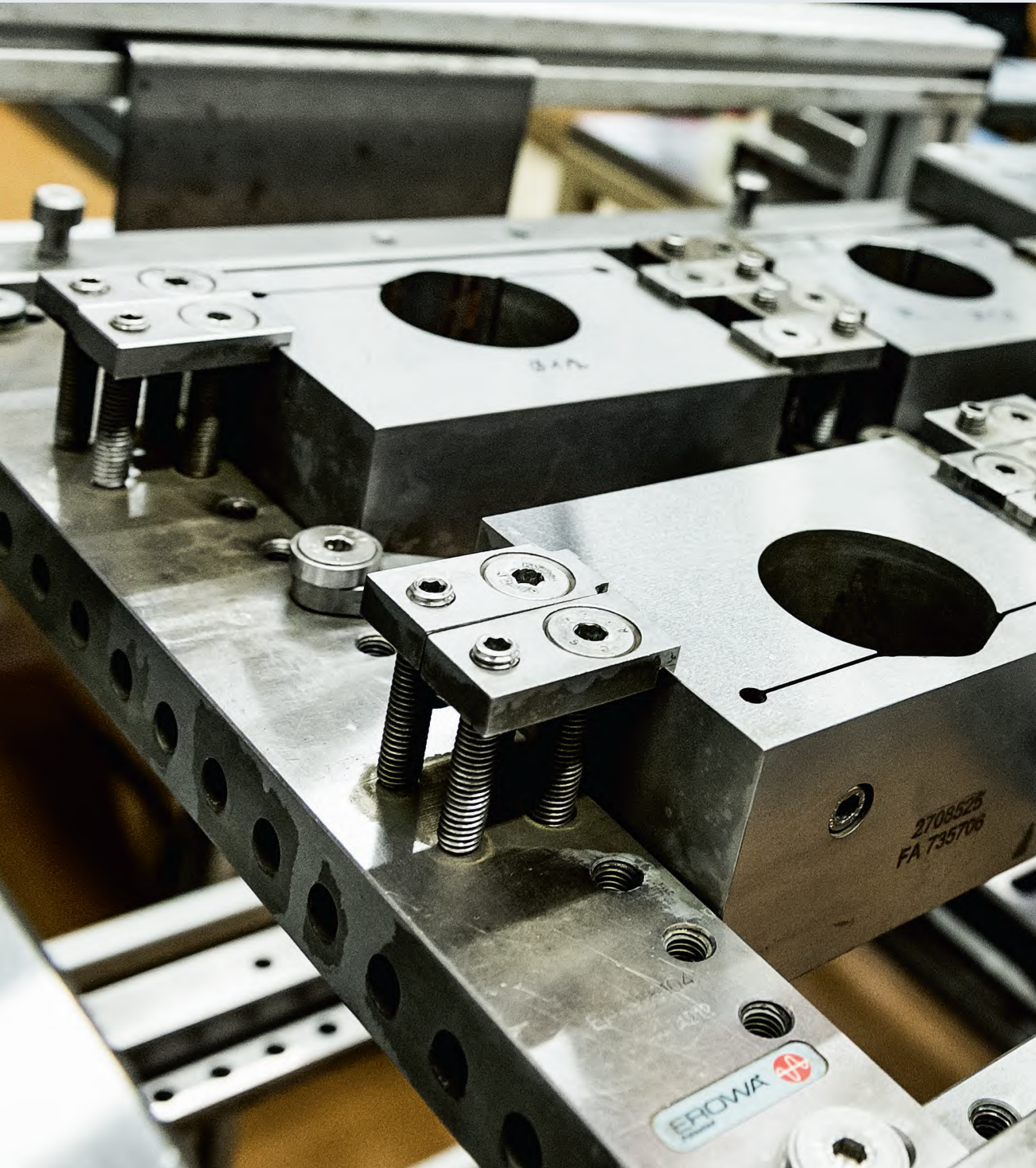

To make it easier for you to find your way about the fields of application for EROWA products, we use the following symbols in all our documents:


1. Manual operation


2. Operate with compressed air jet


3. Operate with manual valve


4. Operate with manual control unit



5. Operate with electro-pneumatic control unit


6. With central flushing clearance


7. Suited for submerged operation



8. Corrosion-resistant material



9. Suited for automatic operation


10. Handling with EROWA Robot gripper S


11. Handling with EROWA Robot gripper Combi


12. Handling with EROWA Robot gripper C



13. Handling with EROWA Robot gripper 72



14. Handling with EROWA Robot gripper 115



15. Handling with EROWA Robot gripper 148



16. Handling with EROWA Robot gripper RN PC 210


17. Handling with EROWA Robot gripper RCS


18. Handling with EROWA Robot gripper WGS-500



EROWA WIRE EDM TOOLING

Wire EDM Tooling	Interfaces to machine table	292
Wire EDM Tooling	Adapters for interfaces	296
Wire EDM Tooling	Fixtures for adapters	301
Wire EDM Tooling	Clamping elements for fixtures	310
Wire EDM Tooling	System accessories	313
Wire EDM Tooling	Wire EDM Tooling Kits	318
Wire EDM Tooling	Clamping equipment sets	320


For chip-removing processes


For EDM sinking


For WEDM

EROWA Wire EDM Tooling

Interfaces to machine table

Technical data	Flat chuck pneumatic	Flat chuck manual	Basic WEDM chuck manual
Repeatability	< 0.002 mm	< 0.002 mm	< 0.002 mm
Clamping power	with reclamping 7,000 N	without reclamping 3,000 N	without reclamping 8,000 N
Generated by	spring power	mechanic	mechanic
Opening with compressed air	min. 6 bar		
Operation	pneumatic	manual	manual
Max. pallet weight	30 kg (with support)	30 kg (with support)	15 kg (with support)

ER-035714 Flat chuck pneumatic PalletSet W / FrameSet



Version	Pneumatic chuck for a direct fit to the Z = 0 base of the WEDM center.
Application	On WEDM centers with manual or automatic workpiece loading.
Connections	On the side for opening, cleaning, reclamping.

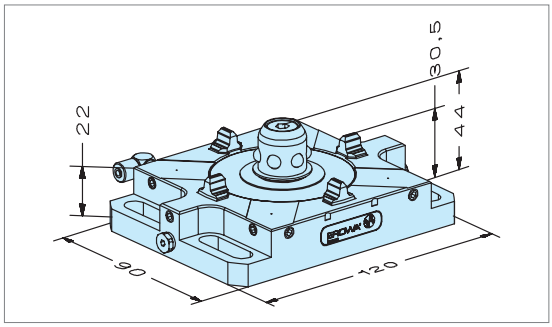

ER-035715 Flat chuck manual PalletSet W / FrameSet



Version	Mechanical chuck for a direct fit to the Z = 0 base of the WEDM center.
Application	On WEDM centers with manual workpiece loading.
Operation	With a manually operated ball lock.

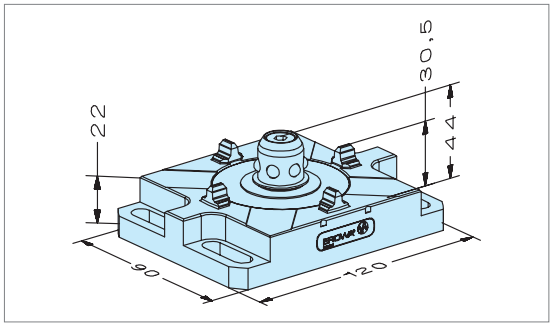

ER-040641 Basic WEDM chuck Basic Tooling



Version	Mechanical chuck for a direct fit to the Z = 0 base of the WEDM center.
Application	On WEDM centers with manual workpiece loading.
Operation	With a manually operated ball lock.

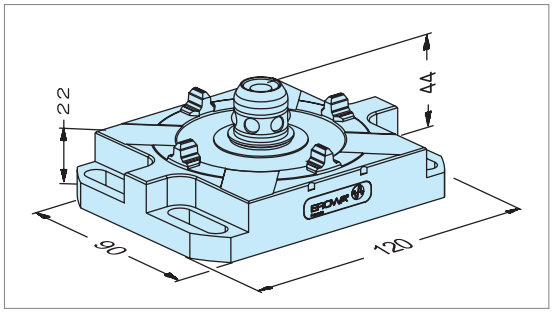

Technical data	Chuck RSA 50	QuickChuck 50 RSM
Repeatability	< 0.002 mm	< 0.002 mm
Indexing	4 x 90°	4 x 90°
Clamping power	2,800 N	4,000 N
Clamping	Spring power	mechanical
Opening with compressed air	min. 6 bar	
Operation	pneumatic	manual

ER-007851 Chuck 50 RSA / on universal plate UnoSet

INOX auto

Version: Automatic, with pneumatic valve.
Application: ITS base for the manual or automatic loading of ITS elements.
Use: On all machine bases and FrameSet beams.
Can be used either horizontally or vertically.

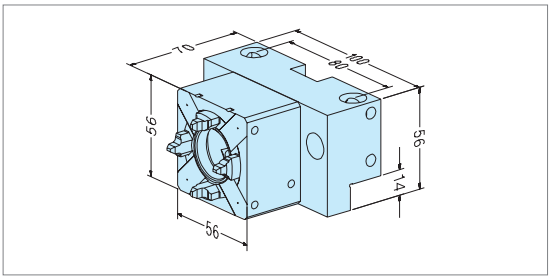

ER-007852 QuickChuck 50 RSM on universal plate UnoSet

INOX

Version: Manual.
Application: ITS base for the manual loading of ITS elements.
Use: On all machine bases and FrameSet beams.
Can be used either horizontally or vertically.

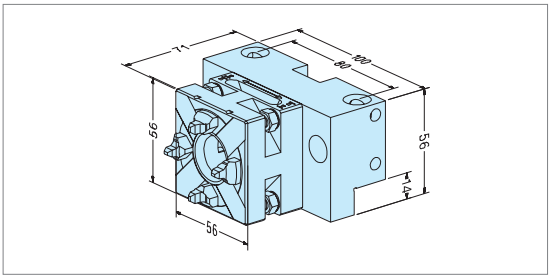

ER-022583 Clamping chuck 50 RSA / UnoSet on adapter plate R=100mm

INOX auto

Version: Chuck 50 on adapter plate, manual.
Application: To be fitted directly to any machine bases with attachment boreholes in a 100 mm grid.

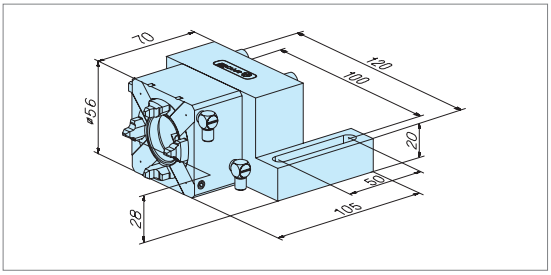

ER-022584 QuickChuck 50 RSM UnoSet on adapter plate R=100mm

INOX

Version: Chuck 50 on adapter plate, manual.
Application: To be fitted directly to any machine bases with attachment boreholes in a 100 mm grid.

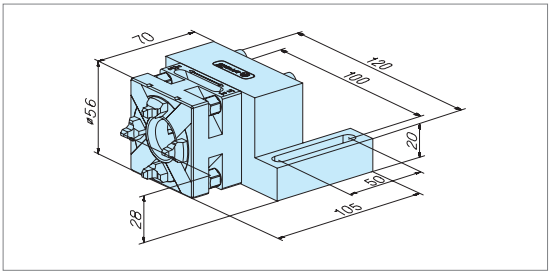

EROWA Wire EDM Tooling

Interfaces to machine table

ER-012847 ManoSet rail L length 947mm XXL 1 piece

INOX

Version	Supplied: 1 unit. Rail for large WEDM centers. X = 947 mm.
Mounting	Directly on the Z=0 base.
Application	To clamp large workpieces with XXL clamping beams 540, ER-037307 or clamping beams 620, ER-034989.
Note	ManoSet rail XXL suitable for Charmilles CTFI60++ and Sodick AQ 750 L.

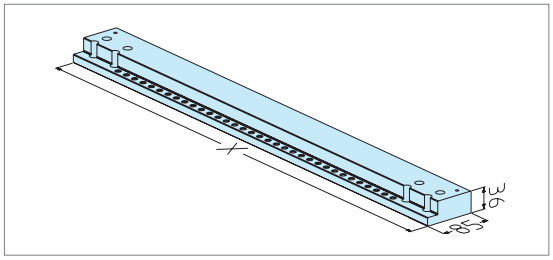

ER-035690 ManoSet rail P 890mm XXL

INOX

Version	Supplied: 1 unit. Rail for large WEDM centers. X = 890 mm, Y = 75 mm.
Mounting	directly on the Z=0 base.
Application	To clamp large workpieces with XXL clamping beams 540, ER-037307 or clamping beams 620, ER-034989.
Note	ManoSet rail XXL suitable for Sodick AQ 750 L and Makino SP 64.

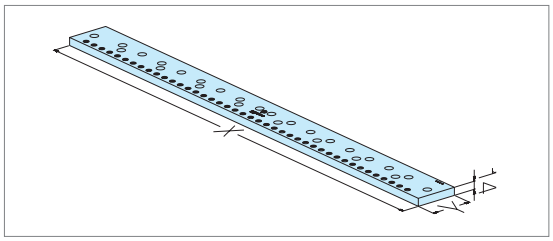

ER-038985 ManoSet rail L Length 850mm XXL

INOX

Version	Supplied: 1 unit. Rail for large WEDM centers. X = 850 mm.
Mounting	directly on the Z=0 base.
Application	To clamp large workpieces with XXL clamping beams 540, ER-037307 or clamping beams 620, ER-034989.
Note	ManoSet rail XXL suitable for Makino EU 64 and SP 64.

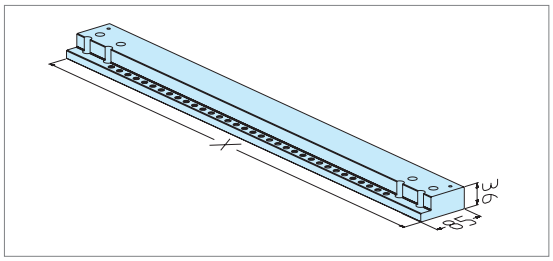

ER-041430 ManoSet rail L Length 1010mm XXL

INOX

Version	Supplied: 1 unit. Rail for large WEDM centers. X = 1010 mm.
Mounting	directly on the Z=0 base.
Application	To clamp large workpieces with XXL clamping beams 540, ER-037307 or clamping beams 620, ER-034989.
Note	ManoSet rail XXL suitable for Makino U86 and Seibu M 750.

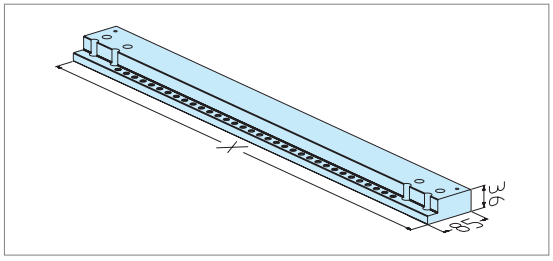

ER-042904 ManoSet rail P length 890mm XXL 1 piece

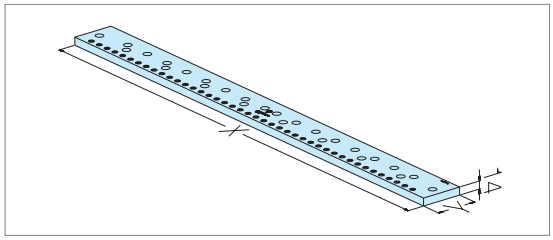

Version	Supplied: 1 unit. Rail for large WEDM centers. X = 890 mm, Y = 75 mm.
Mounting	directly on the Z=0 base.
Application	To clamp large workpieces with XXL clamping beams 540, ER-037307 or clamping beams 620, ER-034989.
Note	ManoSet rail XXL suitable for Charmilles CT FI 640cc, CT FI 690, GFMS Cut 400 / Cut 30P and ONA AE 600.

ER-043487 ManoSet Beam P length 860mm XXL 1 piece

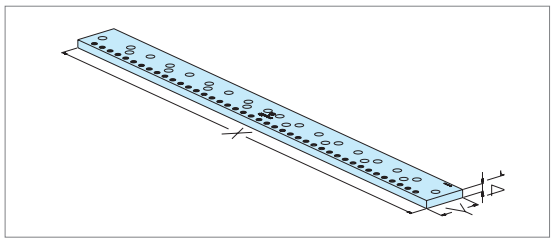

Version	Supplied: 1 unit. Rail for large WEDM centers. X = 860 mm, Y = 50 mm.
Mounting	directly on the Z=0 base.
Application	To clamp large workpieces with XXL clamping beams 540, ER-037307 or clamping beams 620, ER-034989.
Note	ManoSet rail XXL suitable for Mitsubishi FX 30 / FA30, CT FI6050, Makino SP64, Makino DUO 64/U6.

ER-069834 ManoSet rail L length 1050mm Sodick AQ900L

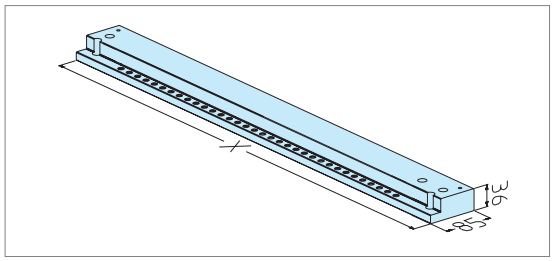

Version	Units supplied: 1 Rail for big WEDM machines. X = 1050mm.
To be fitted	Directly to machine base Z-Zero.
Application	Clamping of big workpieces with XXL clamping beam 540, ER-037307, or clamping beam 620, ER-034989.
Information	ManoSet rail XXL, suitable for Sodick AQ900L.

ER-069835 ManoSet rail P length 950mm Sodick AQ900L

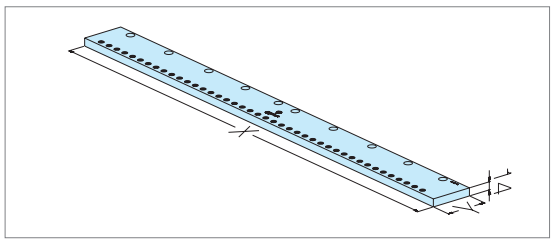

Version	Units supplied: 1 Rail for big WEDM machines. X = 947mm, Y = 50mm,
To be fitted	Directly to machine base Z-Zero.
Application	Clamping of big workpieces with XXL clamping beam 40, ER-037307, or clamping beam 620, ER-034989.
Information	ManoSet Rail XXL, suitable for Sodick AQ900L.

EROWA Wire EDM Tooling

Adapters for interfaces

ER-045555	**Clamping frame FrameSet 430/220-335**
ER-039212	**Clamping frame FrameSet 430/300-335**
ER-039211	**Clamping frame FrameSet 490/220-395**
ER-039213	**Clamping frame FrameSet 500/300-405**
ER-039214	**Clamping frame FrameSet 560/300-465**
ER-039215	**Clamping frame FrameSet 650/300-555**
ER-039216	**Clamping frame FrameSet 650/380-555**
ER-039217	**Clamping frame FrameSet 710/380-615**



Version	Clamping frame for the multiple palletization of workpieces.
Application	To fit on EROWA flat chucks and FrameSet Fix plates.
Options	See Clamping beams and clamping elements for the EROWA Wire Tooling System.

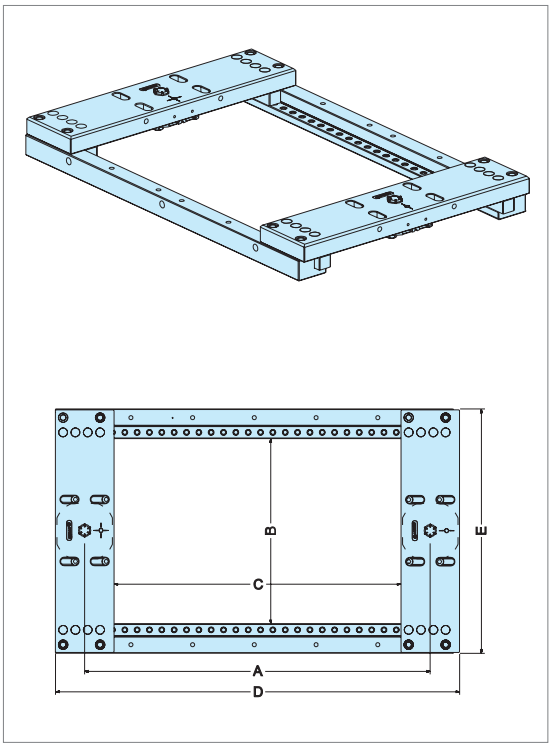

ER-030923 Pendulum holder 3D PalletSet W

INOX auto

Version	Pendulum head for automatic and manual loading. G-Centerning plates for increased durability.
Application	Basis for all the other clamping elements such as UniVise square, frame pallet, vise and beam pallet.
Note	Adjustable in the X-, Y- and Z-axes.

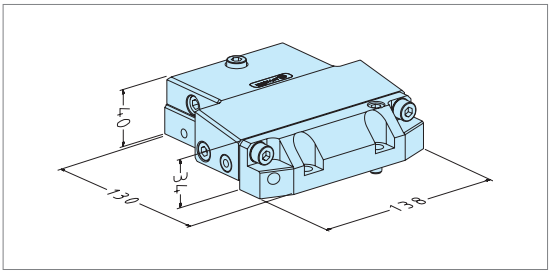

ER-030678 Fix holder PalletSet W

INOX auto

Version	Standard element for automatic and manual loading.
Application	Base for all other clamping elements such as UniVise square, frame plate, vise and beam pallet.
Note	Adjustable in the C-axis.

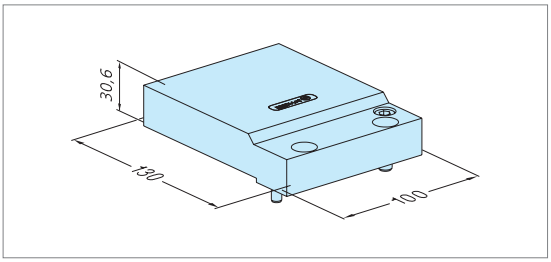

ER-031942 Basic WEDM pendulum holder Basic Tooling

INOX

Version	Pendulum head for manual loading.
Application	For use on the Basic WEDM chuck. As a basis for all other clamping elements like UniVise, square, vise and beam pallet.
Note	Adjustable in the X-, Y- and Z-axes.

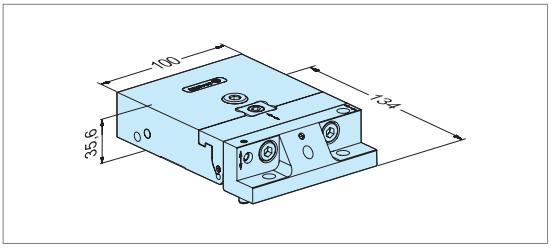

ER-033955 Basic WEDM fix holder Basic Tooling

INOX

Version	Standard element for manual loading.
Application	For use on the Basic WEDM chuck. As a basis for all other clamping elements like UniVise, square, vise and beam pallet.
Note	Adjustable in the C-axe.

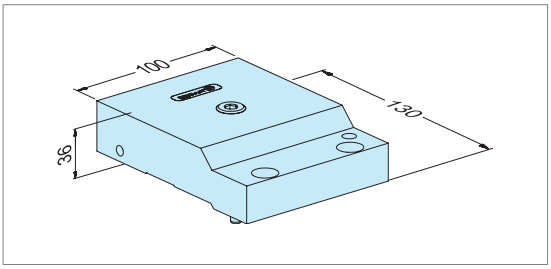

EROWA Wire EDM Tooling

Adapters for interfaces

ER-030645 UnoSet adapter PalletSet W centering plate G



Version	System adapter of PalletSet W to UnoSet.
Application	Clamps workpieces of system size ITS 50 horizontally into the workspace.
Note	Fits all UnoSet and ITS 50 clamping elements.

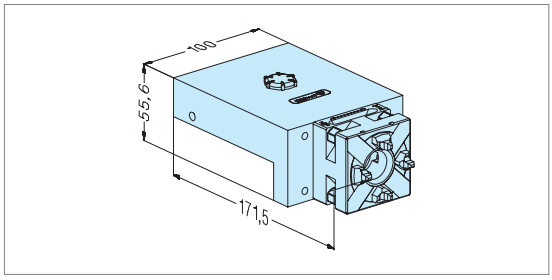

ER-030643 UnoSet adapter with RSA 50 PalletSet W



Version	System adapter from Palletset W to UnoSet.
Application	Clamps workpieces of the ITS 50 system size horizontally into the workspace.
Clamping power	2800 N
Note	Suitable for all UnoSet and ITS 50 clamping elements.

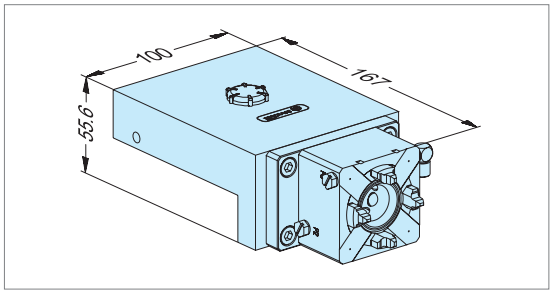

ER-033933 PSW adapter QuickChuck 50 Combi PalletSet W / centering plate G



Version	System adapter from Palletset W to UnoSet and/or Compact.
Application	Clamps workpieces of the ITS 50 and Compact system sizes horizontally into the workspace.
Note	Suitable for all UnoSet and ITS 50 clamping elements and Compact clamping elements.

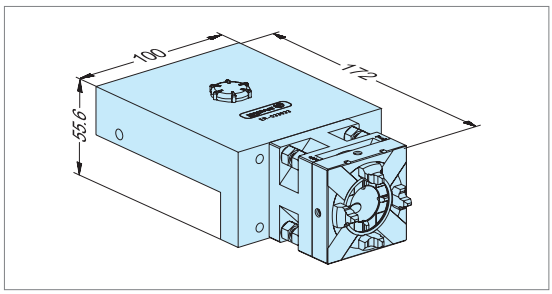

ER-033974 PSW adapter QuickChuck 100 P



Version	System adapter from Palletset W to UnoSet, ITS 50, holder ø 72, and pallets 148, 115.
Application	Clamps workpieces of the ITS 50 and ITS 100 system sizes horizontally into the workspace.
Note	Suitable for all UnoSet clamping elements.

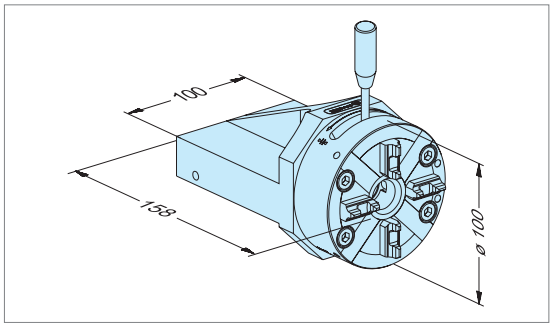

ER-035994 PSW adapter QuickChuck 100 P 360° turnable



Version	System adapter from Palletset W to UnoSet, ITS 50, holder ø 72, and pallets 148, 115.
Application	Clamps workpieces of system size ITS 50 and ITS 100 horizontally into the working range. Can be rotated around 360°.
Note	Fits all UnoSet clampingelements and ITS 115/148 pallets.

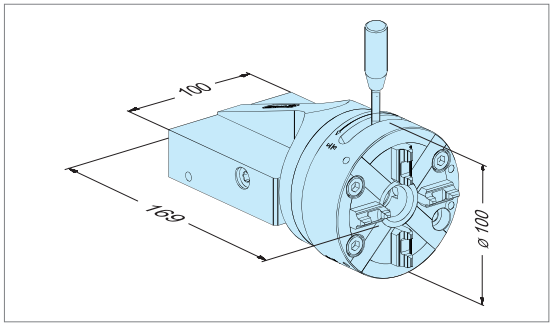

ER-038710 Adapter Z-Vario PalletSet W / UnoSet RSM

INOX auto

Version	System adapter from Palletset W to UnoSet. Z-axis height adjustable.
Application	To clamp UnoSet and electrodes/workpieces in the ITS 50 system size horizontally into the workspace.
Note	Suitable for use with the whole ITS 50 system and electrode holders.

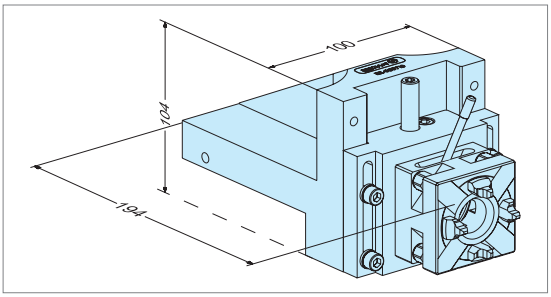

ER-039795 UnoSet adapter ITS 50 - holder ø 72 PalletSet W

INOX auto

Version	System adapter from Palletset W to ITS 50 holder ø 72
Application	Clamps workpieces of holder ø 72 size horizontally into the workspace.
Operation	Pneumatically with air jet.
Note	Suitable for all holders ø 72 and ITS 50.
Option	ER-032832 Sealing ring ITS Chuck 50.

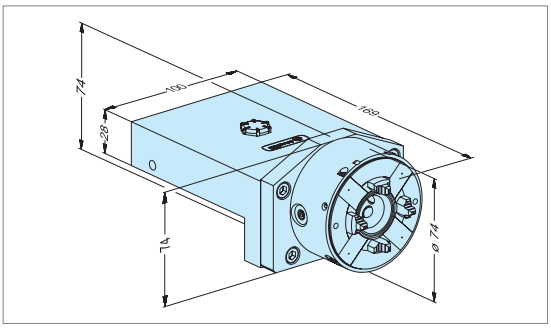

ER-038711 Extension arm Z-Vario PalletSet W / UnoSet

INOX

Version	Extension arm with centering system connection to ITS 50. Accommodates workpieces and electrodes.
Application	Accommodation of workpieces and electrodes for machining in a horizontal or vertical position.
Load	Max. 6 kg
Note	Can be used in combination with adapter Z-Vario PSW/ UnoSet. Indexation around 4x90°.

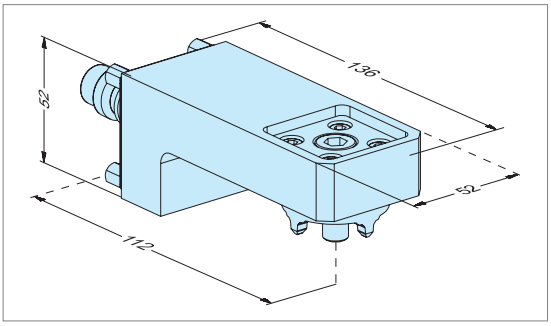

ER-020596 Extension arm UnoSet

INOX

Clamping range	80 mm
Max. load	6 kg
Version	The extension arm UnoSet with QuickChuck 50 is suitable for the accommodation of workpieces and electrodes that have to be machined in a vertical and in a horizontal position.
Note	Indexable around 4x90°.

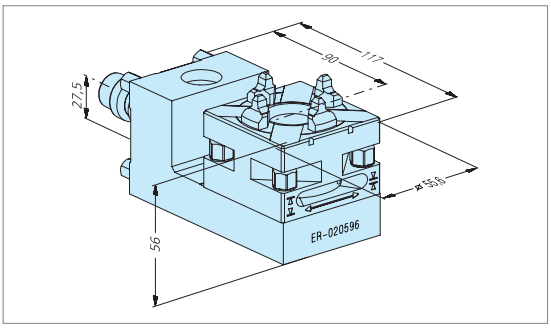

EROWA Wire EDM Tooling

Adapters for interfaces

ER-007877 TurnFix 50 UnoSet

INOX

Version	Chuck 50, manual, with ITS base plate, continuously able to rotate round 360°.
Application	ITS base for the manual loading of ITS elements carrying workpieces that require angular positions.
Use	On any ITS chuck of system size 50.

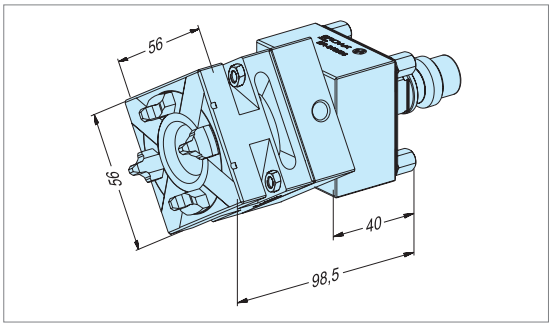

ER-028471 Angle clamping unit UnoSet QuickChuck 50

INOX

Version	Chuck 50, angle to be set with the vernier.
Application	WEDM or EDM. To fit lateral sprues to casting tools.
Max. load	6 kg.
Max. work-piece size	100 x 100 x 100 mm.
Connections	Flushing connection in place.

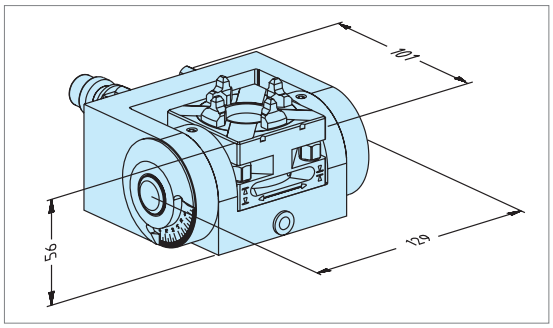

ER-027640 Square clamping unit UnoSet CompactChuck 50 Combi

INOX

Version	CompactChuck 50 Combi. Angle to be set with the vernier. Angled clamping unit made of corrosion-resistant steel.
Application	WEDM or EDM.
Connections	Flushing connection in place.

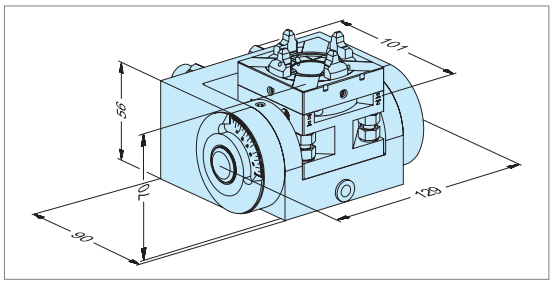

ER-027641 Square clamping unit UnoSet CompactChuck M

INOX

Version	CompactChuck manual. Angle to be set with the vernier. Angled clamping unit made of corrosion-resistant steel.
Application	WEDM or EDM.
Connections	Flushing connection in place.

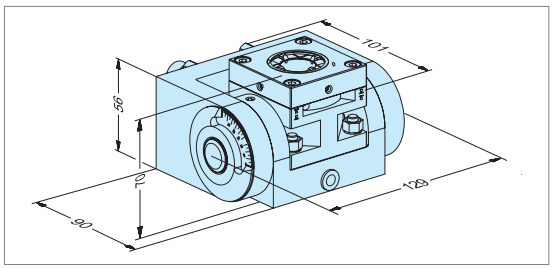

ER-028480 Angle clamping unit UnoSet for collet chuck electrode holder

Version	Angled clamping unit made of corrosion-resistant steel, except collet chuck unit. Angle to be set with the vernier.
Application	WEDM or EDM.
Connections	Flushing connection in place.

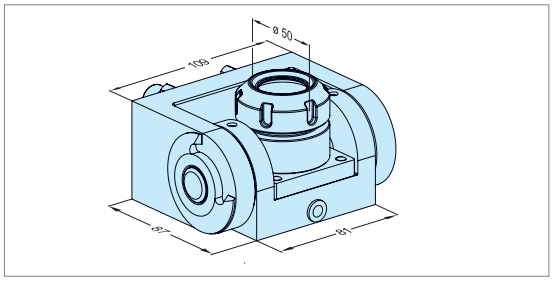

EROWA Wire EDM Tooling

Fixtures for adapters

ER-017645	**Clamping beam 220mm**
ER-017646	**Clamping beam 300mm**
ER-017647	**Clamping beam 380mm**
ER-017648	**Clamping beam 460 mm**

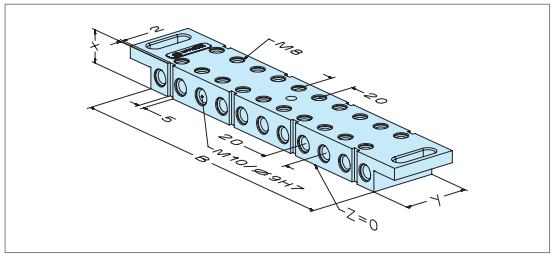

Application To clamp workpieces with clamping claws on Z-discs.
Version Cross boreholes, ground.

ER-021126	**Double-sided clamping beam 300mm**
ER-021127	**Double-sided clamping beam 380mm**
ER-021128	**Double-sided clamping beam 460mm**

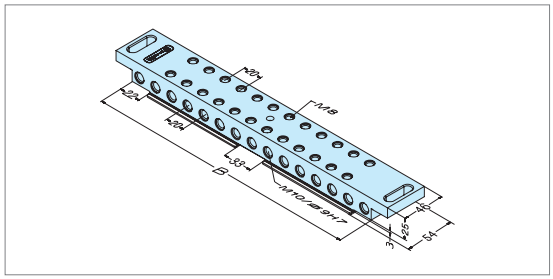

Application To clamp workpieces with clamping claws on Z-support ledges.
Version Cross boreholes, ground.

ER-037307	**Double-sided clamping beam 540 ManoSet XXL**

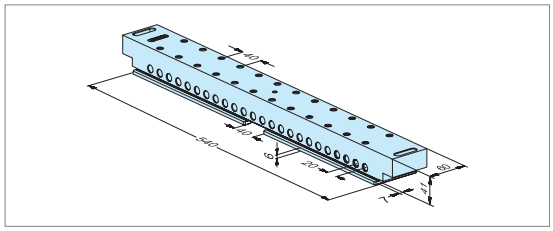

Application Clamping of workpieces with clamping claws on Z-support ledges.

ER-034989	**Double-sided Clamping beam 620mm ManoSet XXL**

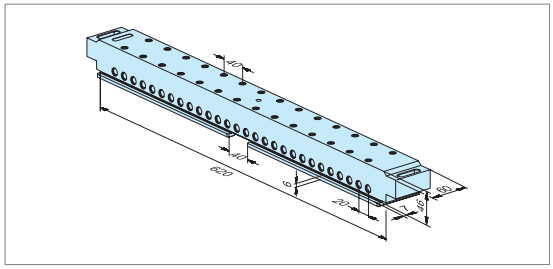

Application Clamping of workpieces with clamping claws on Z-support ledges.

EROWA Wire EDM Tooling

Fixtures for adapters

ER-030110 Beam 5-fold 300 QuickChuck 50 Length 338 mm

INOX

Version	Five chucks 50, manual, in a row.
Application	ITS adapter for the manual loading of five ITS elements.
Use	On all FrameSet clamping frames. Width 300 mm. In combination with the basic adapter set (ER-016652) on the WEDM machine table.

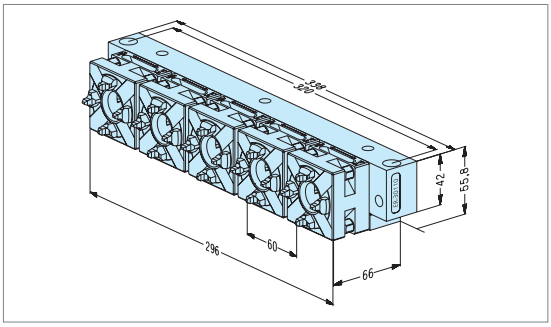

ER-018938 UniVise square PalletSet W

INOX

Version	Square with all the clamping accessories.
Application	To be fitted to fix holders or pendulum holders.
Note	Max. load: 10 kg.

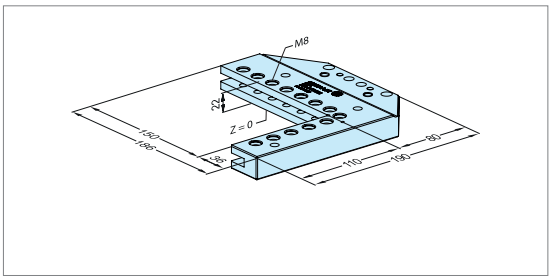

ER-018940 Vise PalletSet W

INOX

Version	Clamping element with clips for one-sided attachment to workpieces.
Application	To be fitted to fix holders or pendulum holders.
Note	Max. load: 12 kg.

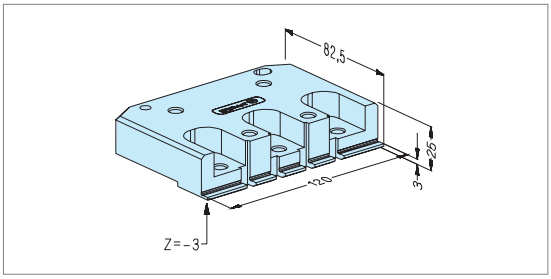

ER-019248 Prism holder 80 PalletSet W

INOX

Version	Prism and clamping part with detachable Z-supports.
Application	Clamping of cylindrical workpieces of up to Ø 80 mm.
Assembly	To be fitted to the front of beam pallet ER-018937 or clamping beams
Note	Max. load: 6 kg.

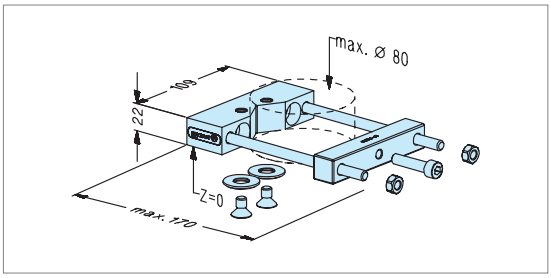

ER-031179 Prism holder 120mm PalletSet W

INOX

Version	Prism and clamping bars with detachable Z-supports.
Application	To clamp cylindrical workpieces of up to ø 120 mm.
Mounting	directly to fixholder or pendulum holder.
Note	Max. load: 10 kg.

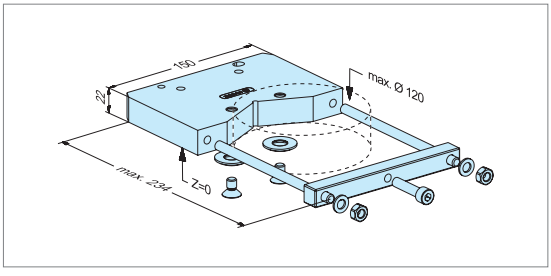

ER-038891 Prism holder ø 10 - 180 PalletSet W

INOX

Version	Prism and clamping bars with detachable Z-supports.
Application	To clamp cylindrical workpieces of up to ø 180 mm.
Mounting	directly to fixholder or pendulum holder.
Note	Max. load: 12 kg.

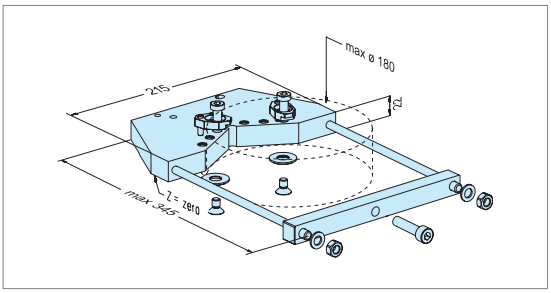

ER-018937 Beam pallet PalletSet W

INOX

Version	Pallet to accommodate various clamping elements. Includes Z-supports and clips.
Application	To be fitted to fix holders or pendulum holders 3D.
Options	Prism holders and BeamVise clamping elements.

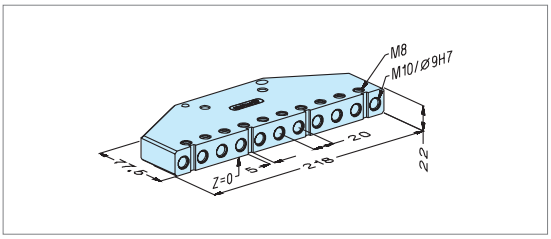

ER-054922 Flat vise 8mm PalletSet W

INOX

Version	One movable jaw and one fixed jaw. Hardened, ground and corrosion-resistant.
Clamping range	0 - 96 mm.
Max. load	5 kg.
Application	Lateral clamping of workpieces machined outside of up to 96mm. To be fitted to fixholder or pendulum holder.

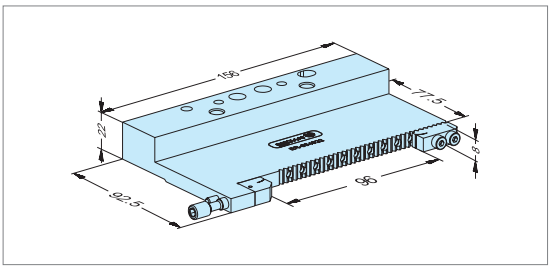

ER-055774 Flat vise 170mm PalletSet W

INOX

Version	One movable and one fixed jaw. Hardened, ground and corrosion-resistant.
Clamping range	0 - 170mm.
Max. load	12 kg.
Application	Lateral clamping of workpieces of 0-170mm machined from the outside. To be fitted to fix or pendulum holders.

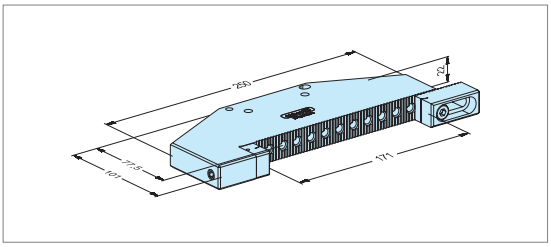

EROWA Wire EDM Tooling

Fixtures for adapters

ER-031945 Basic holder PalletSet W



Version	To accommodate various clamping elements.
Application	To fit to fixholder or pendulum holder 3D.
Options	Jaw holder ER-033958 or bracket holder ER-031952.

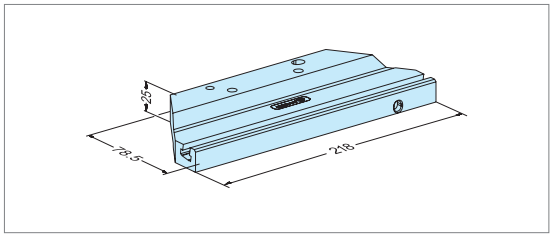

ER-025895 Vise PalletSet W 40mm



Version	Vise with fixed Z-lip and jaws attached from above. Hardened and ground.
Clamping range	max. 150 x 150 x 40 mm.
Max. load	12 kg
Application	Lateral clamping of workpieces of 0 -150 mm machined from the outside. To be fitted to fix or pendulum holders.

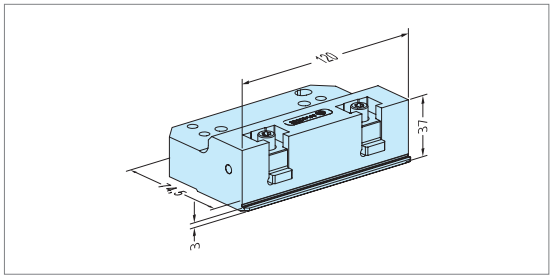

ER-025896 Vise PalletSet W 100mm



Version	Vise with fixed Z-lip and jaws fitted from above.
Application	To clamp workpieces of up to 100 mm in height. To be fitted to fixholder or pendulum holder.
Max. clamping range	150 x 150 x 100 mm.
Max. load	12 kg

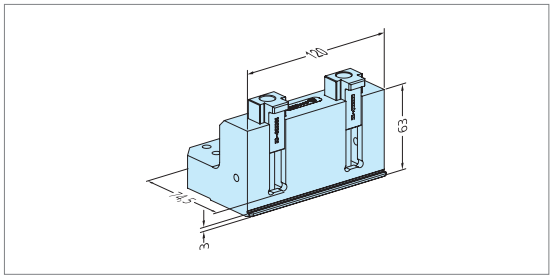

ER-034631 Vise PalletSet W 140mm



Version	Vise with fixed Z-lip and jaws fitted from above. Hardened and ground.
Application	To clamp workpieces of up to 140mm in height. To be fitted to fixholder or pendulum holder.
Max. load	12 kg
Max. clamping range	150 x 100 x 140 mm

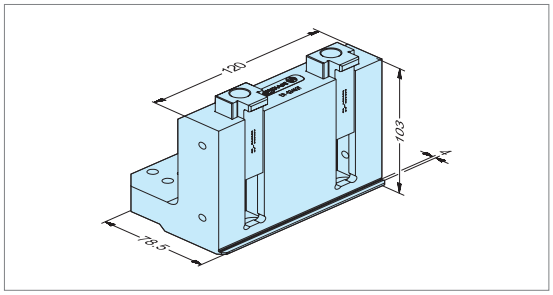

ER-051800 Sine vise PalletSet W

Version	Vise with adjustable angle position and jaws fitted from above. Hardened and ground.
Application	To clamp workpieces at angles adjustable between 0-90°. To fit to fixholder or pendulum holder.
Clamping range	min. 10 mm / max. 75 mm
Max. load	12 kg

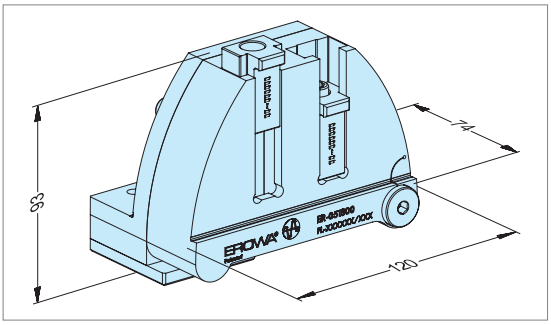

ER-018941 Frame pallet PalletSet W

Version	Clamping frame for multiple palletization of work-pieces
Application	To be fitted to fix holders or pendulum holders.
Option	Clamping beam 220 ER-017645.
Note	To support the clamping frame, use Z-supports.

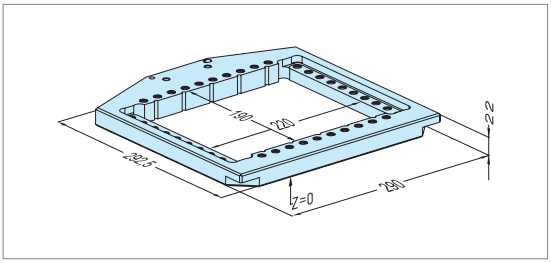

ER-029228 Z-Vario QuickChuck PalletSet W

Version	Fits 3D ER-030923 pendulum holder. Hardened and ground.
Max. load	8 kg
Clamping range	max. height adjustement 30 mm.
Application	To machine electrodes in PSW which have to be adjusted in height.

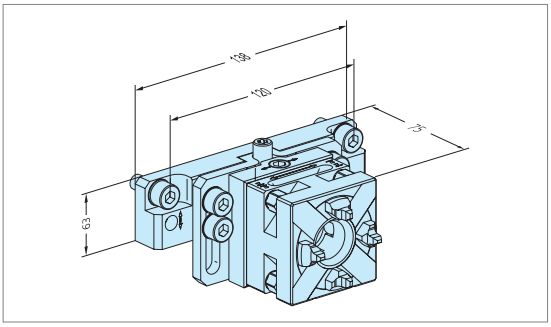

ER-029229 Z-Vario clamping elements PalletSet W

Version	Fits 3D ER-030923 pendulum holder. Hardened and ground.
Max. load	8 kg
Clamping range	max. height adjustment 30 mm.
Application	PSW clamping elements can also be adjusted in height.

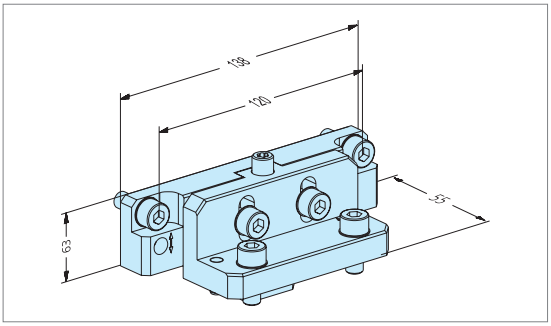

EROWA Wire EDM Tooling

Fixtures for adapters

ER-025115	Z-support PalletSet W universal pneumatic, 1 pair

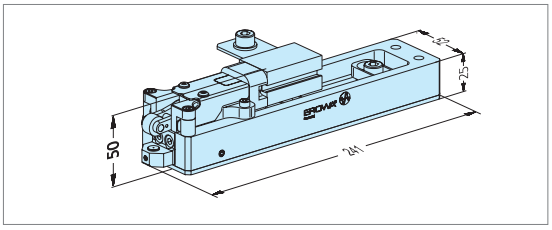

Version 1 pair of supports. Hardened and ground.
Mounting Directly on the Z=0 base of the WEDM center.
Operation With manual control unit.
Application Support and clamping of the frame plate with weights of up to 30kg. Stabilizes the frame plate in case of high flushing pressure.

ER-025116	Z-support PalletSet W universal manual 1 pair

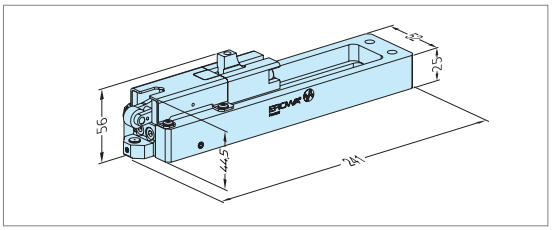

Version 1 pair of supports. Hardened and ground.
Mounting Directly on the Z=0 base of the WEDM center.
Operation Manually
Application Support and clamping of the frame plate with weights of up to 30 kg. Stabilizes the frame plate in case of high flushing pressure.

ER-025100	Z-support beam 300 PalletSet W manual
ER-025101	Z-support beam 380 PalletSet W manual
ER-027205	Z-support beam 460 PalletSet W manual

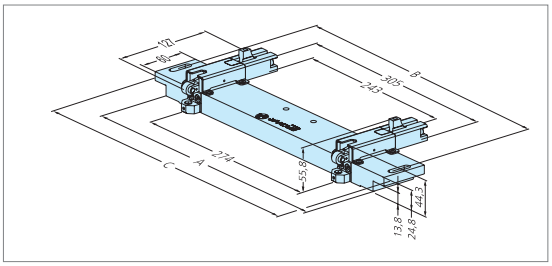

Version Support beam for use in EROWA ManoSet.
Operation Manually
Applicaton Support and clamping of the frame plate with weights of up to 30 kg in combination with EROWA ManoSet. Stabilizes the frame plate in case of high flushing pressure.

ER-025027	Z-support beam 300 PalletSet W pneumatic
ER-025030	Z-support beam 380 PalletSet W pneumatic
ER-028306	Z-support beam 460 PalletSet W pneumatic

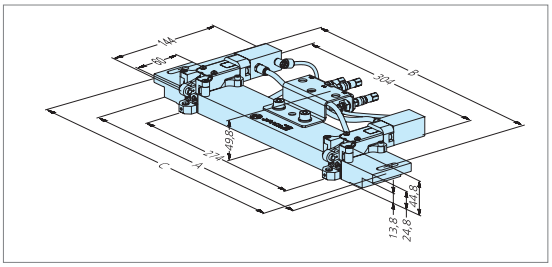

Version Support beam for use in EROWA ManoSet.
Operation Pneumatically.
Application Support and clamping of the frame plate with weights of up to 30kg in combination with EROWA ManoSet. Stabilizes the frame plate in case of high flushing pressure.

ER-008814 Precision vise 0 - 100 UnoSet

INOX

Clamping range	Ranges from 0 to 100 mm.
Max. extension	40 mm at 100 mm workpiece height.
Zuladung	max. 5 kg.
Version	Workpiece fixed. Including three sets of clamping jaws.

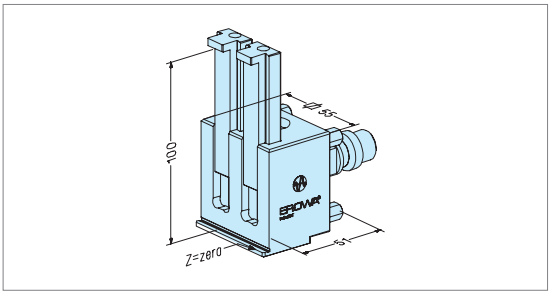

ER-007935 Rotary vise 0 - 100 UnoSet

INOX

Clamping range	0–100 mm
Max. extension	40 mm with 100 mm part height.
Zuladung	max. 5 kg.
Version	Continuously able to rotate around 360°. Set with three pairs of clamping jaws.

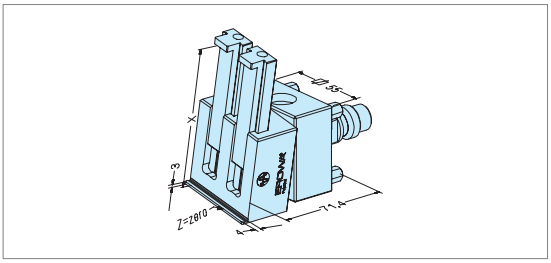

ER-014698 VeeVise UnoSet

INOX

Clamping range	0–100 mm
Max. extension	40 mm with 100 mm part height.
Zuladung	max. 5 kg.
Version	Clamping component without ITS connection. To fit to an existing pendulum rotating adapter.

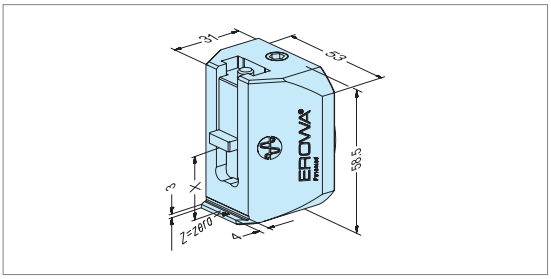

ER-008842 Pendulum vise 0 - 100 UnoSet

INOX

Clamping range	Ranges from 0 to 100 mm.
Max. extension	40 mm at 100 mm workpiece height.
Zuladung	max. 5 kg.
Version	Workpiece adjustable in two axes. Including three sets of clamping jaws.

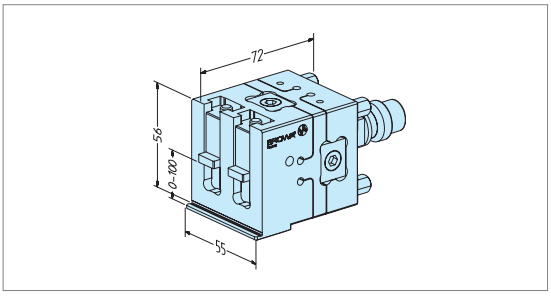

EROWA Wire EDM Tooling

Fixtures for adapters

ER-008856 Rotatable pendulum vise 0 - 100 UnoSet

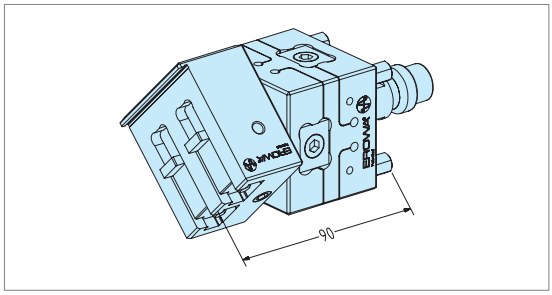

Clamping range	0–100 mm
Max. extension	40 mm with 100 mm part height.
Max. load	max. 5 kg
Version	For adjustable workpiece positioning in three axes. Continuously able to rotate around 360°. Set with three pairs of clamping jaws.

ER-014722 VeeVise TP UnoSet

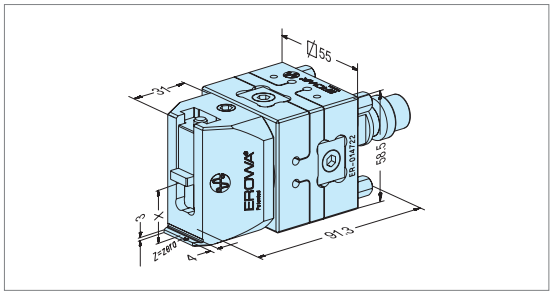

Clamping range	0–100 mm
Max. extension	40 mm with 100 mm part height.
Max. load	max. 5 kg.
Version	For adjustable workpiece positioning in three axes. Continuously able to rotate around 360°. Set with three clamping jaws.

ER-016691 V-block holder UnoSet

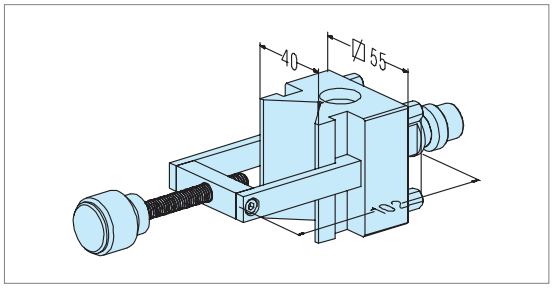

Clamping range	Parts up to ø 40 x H 150 mm
Max. load	1.5 kg
Application	To clamp parts in prismatic slot. Parallel and angular precision 0.01 mm.

ER-015670 UniVise P UnoSet

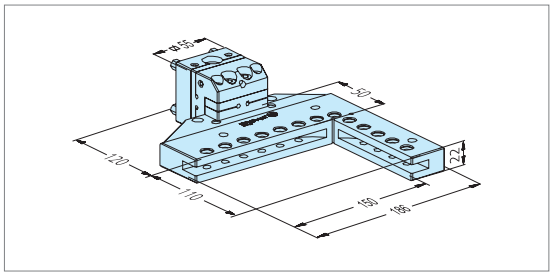

Clamping range	Round parts: ø 5-85mm; flat parts: 140 x 100mm.
Max. load	5kg
Version	Complete set with all clamping elements, adjustable in three axes.

ER-055535 Flat vise 8mm UnoSet

Version	One movable jaw and one fixed jaw. Hardened, ground and corrosion-resistant.
Clamping range	0 - 96 mm.
Max. load	5 kg
Application	Lateral clamping of workpieces machined outside of 0 - 96 mm.

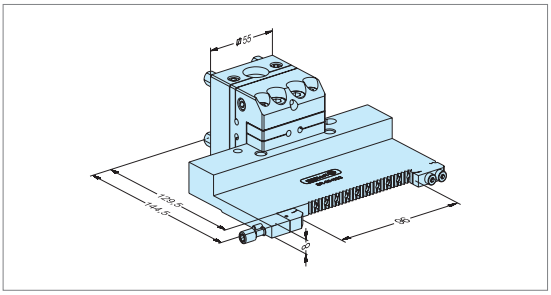

ER-052091 Support straight UnoSet with mini clamp

Version	Vertical clamping of workpieces.
Clamping range	0 - 40 mm.
Max. load	5 kg
Application	Vertical clamping of workpieces.

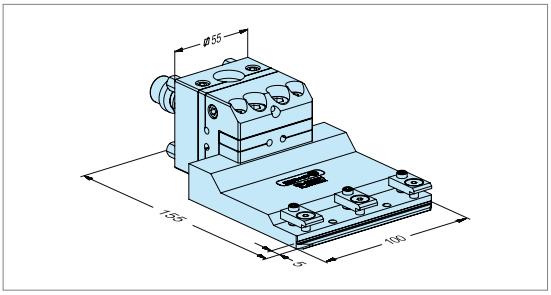

EROWA Wire EDM Tooling

Clamping elements for fixtures

ER-031952 Bracket holder PalletSet W (1 pair)

INOX

Version	Two movable vertical jaws. Hardened, ground and corrosion-resistant.
Application	Variable vise to be fitted to basic holder PSW.
Mounting	Directly to basic holder ER-031945, using the fittings supplied.

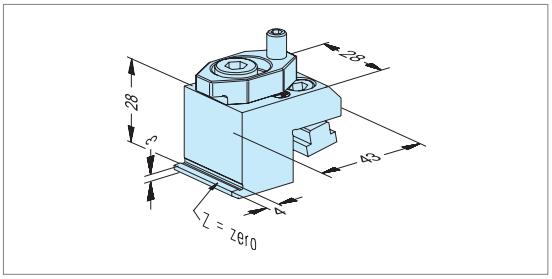

ER-033958 Jaw holder PalletSet W

INOX

Version	One movable jaw and one fixed jaw. Hardened, ground and corrosion-resistant.
Application	Variable vise to be fitted to basic holder PSW.
Mounting	Directly to basic holder ER-031945, using the fittings supplied.

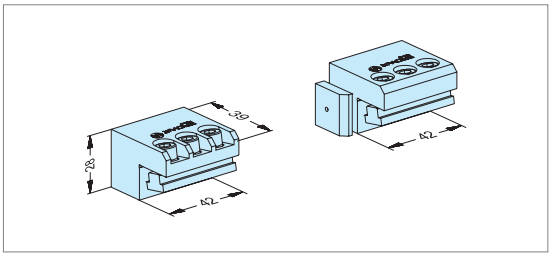

ER-062788 BeamVise Single

INOX

Version	One movable and one fixed stop jaw. Hardened, ground, corrosion-resistant.
Application	Variable vise laterally on EROWA clamping beams.
Assembly	With the enclosed assembly elements to the desired clamping beam Pallet Set W ER-018937.

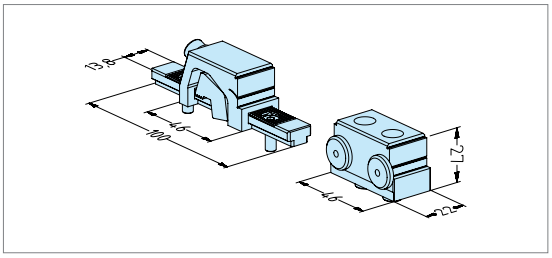

ER-062789 BeamVise Twin

INOX

Version	Two movable stop jaws and one fixed stop jaw. Hardened, ground, corrosion-resistant.
Application	Variable vise laterally on EROWA clamping beams.
Assembly	With the enclosed assembly elements to the desired clamping beam PalletSet W ER-018937.

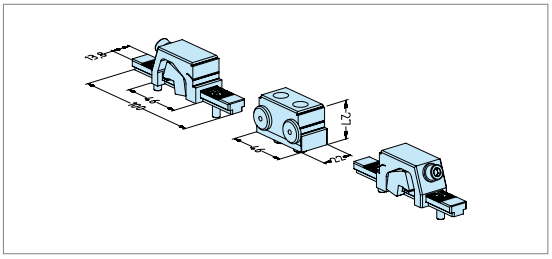

ER-008231 Mini distance support

INOX

Application	As side support for workpieces, or for clamping small, flat single parts.
Presetting	The support surface height corresponds to Z = 0 and is not adjustable.
Use	On all clamping and gripping beam ER-018937.

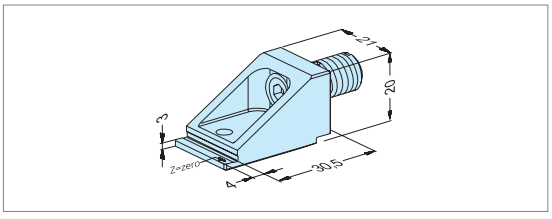

ER-008875 Fixed distance support

INOX

Application	As side support for workpieces, or for clamping small single parts.
Presetting	The support surface height corresponds to Z = 0 and is not adjustable.
Use	On all clamping beams up to 460 mm length.

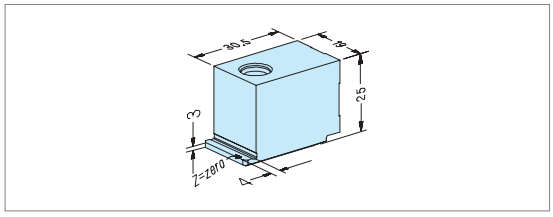

ER-008873 Adjustable distance support

INOX

Application	As side support for workpieces, or for clamping small single parts.
Presetting	The support surface height corresponds to Z = 0 and is adjustable +/- 0.15 mm.
Use	On all clamping and gripping beams.

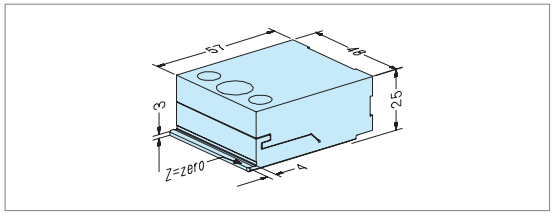

ER-007990 DiaFix 3 pieces

INOX

Application	For supporting round parts with diameters starting at 50 mm, or as a side support for rectangular work-pieces.
Presetting	The support surface height corresponds to Z = 0 and is not adjustable.
Use	On all clamping beams.

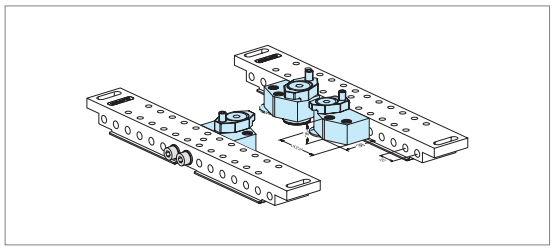

ER-008221 Z beam

INOX

Application	As side support for workpieces, or for clamping small single parts.
Presetting	The support surface height corresponds to Z = 0 and is adjustable +/- 0.15 mm.
Use	On all plates and beams with Z = + 14 mm.

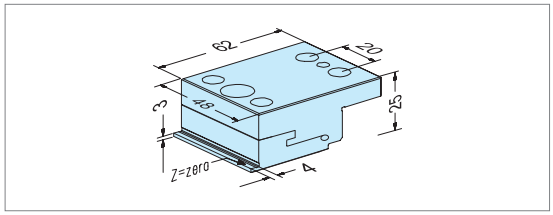

ER-008220 Z universal support

INOX

Application	As side support for workpieces, or for clamping small single parts.
Presetting	The support surface height corresponds to Z = 0 and is adjustable +/- 0.15 mm.
Use	On all carrier plates and bases with Z = 0.

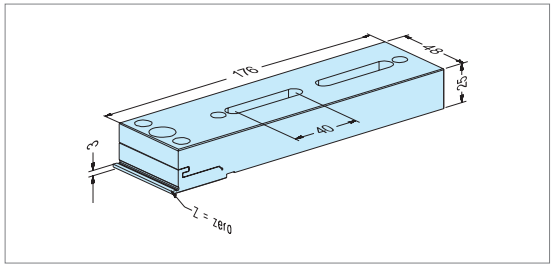

EROWA Wire EDM Tooling

Clamping elements for fixtures

ER-016657 BeamStop set

INOX

Version	Set of two stops for EROWA beams. Hardened, ground, corrosion-resistant.
Application	On ManoSet base rails, on Basic Adapter and in RoboSet Clamping frames.
Assembly	With the enclosed bolts.

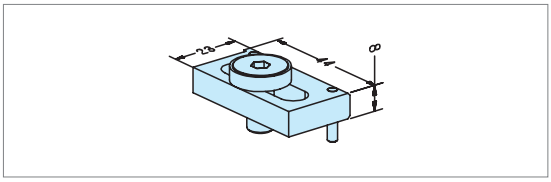

ER-016652 Basic adapter set, 120x100x14 mm 120x100x14 mm

INOX

Version	A pair of ground, hardened, corrosion-resistant steel plates with variable assembly hole grids, including BeamStop.
Application	Base on WEDM machines unequipped with tooling system for the use of EROWA ManoSet clamping beams.
Assembly	With the enclosed assembly elements directly onto the existing Z-zero machine structure.

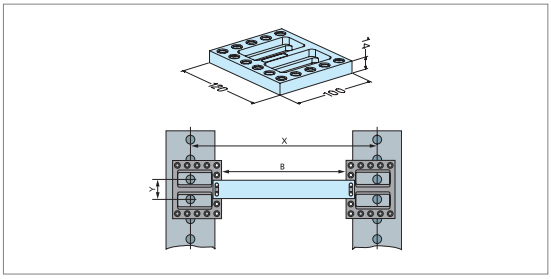

ER-017198 Basic adapter 120x100x14 mm 120x100x14 mm

INOX

Version	A ground, hardened, corrosion-resistant plate with variable assembly hole grids.
Application	Base on WEDM machines with no tooling system. With chucks ER-007851/ER-007852.
Assembly	With the enclosed bolts directly onto the existing Z-zero base.

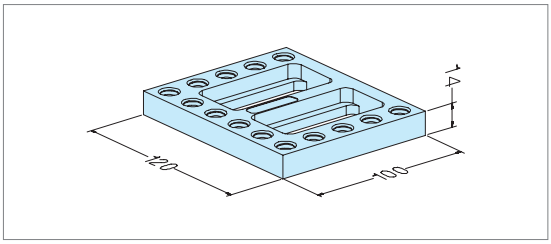

EROWA Wire EDM Tooling

Accessories

ER-012727 Reference pin UnoSet

INOX

Version Hardened, ground, borehole ø 8 mm.
Application To determine reference measurements on horizontal chucks.

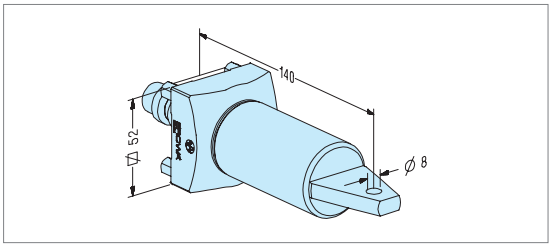

ER-055158 Alignment pallet for PalletSet W

INOX

Version Hardened, ground gauge with lateral reference surfaces and two defined reference boreholes.
Application To determine the reference point and to align chucks.

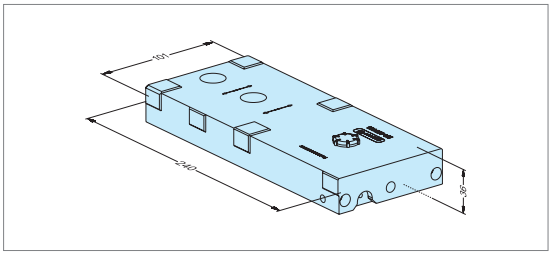

ER-022669 Bracket for flat chuck FSF without fixing borehole, 2 pieces

INOX

Version Steel, unhardened. Set of 2.
Application To fit flat chucks to WEDM centers.

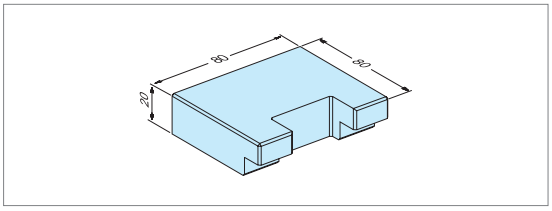

ER-022670 Bracket for flat chuck FSF Agie, 2 pieces

INOX

Version Steel, with attachment boreholes. Set of 2.
Application To fit flat chucks to Agie WEDM centers.

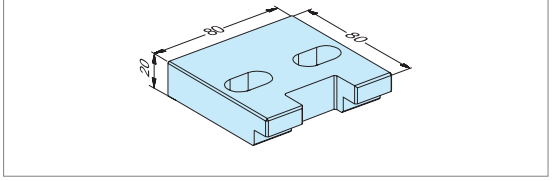

EROWA Wire EDM Tooling

Accessories

ER-028913 Insulation set PalletSet W

Application: To fit underneath the flat chucks and Z-supports to insulate the tooling system.

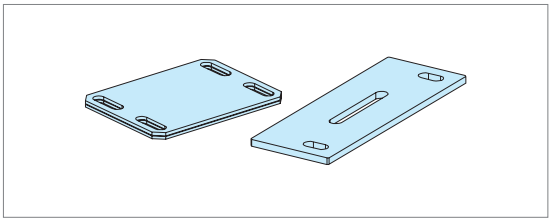

ER-026768 Cover for flat chuck FSF

Version: Cover for flat chucks
Application: Protects flat chucks that are not in use against contamination and damage.

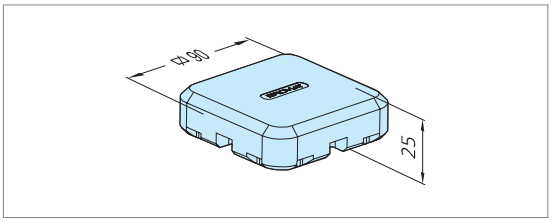

ER-027695 Cover for flat clamping chuck PalletSet W

Version: Set consisting of 2 covers for flat chucks and 4 covers for Z-supports.
Application: Protects flat chucks and Z-supports that are not use against contamination and damage.

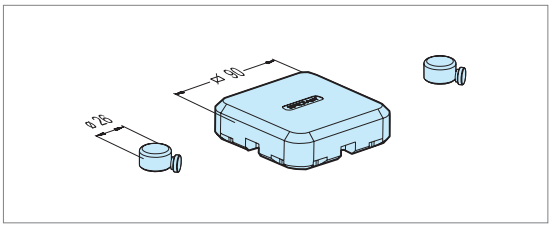

ER-035156 EWIS™ rapid chip with holder long

Version: Holder with built-in datacarrier. EWIS™ Chip: read only.
Application: With EROWA Collet Chuck holders and Square 15/25 holders.
Mounting: With supplied M4 bolts.

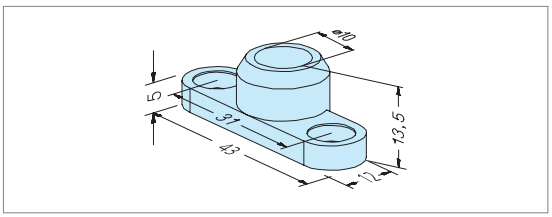

ER-035294 EWIS™ Rapid chip with chip holder RCS with chip ø 3 x 13.5mm

Version: Holder with built-in data carrier. EWIS chip: read only.
Application: To build into RCS coupling, PalletSet W holder and Basic WEDM holder.

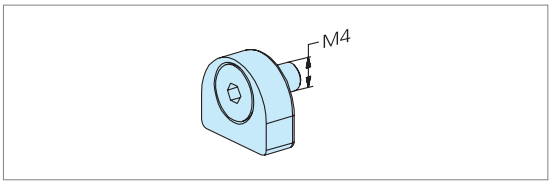

ER-041179 Chip holder FrameSet EWIS™ Rapid mit Chip ø3,15 x 13,3mm

Version Holder with built-in data carrier. EWIS chip: read only.
Application To build into FrameSet clamping frames.

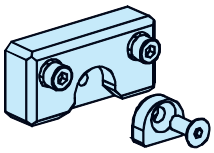

ER-030671 Centering plate, G100 M8 x 1 PalletSet W, set of 5 pieces

INOX

Version Set of 5, including support feet.
Application To be fitted directly to workpiece and electrodes to be used on flat chucks.

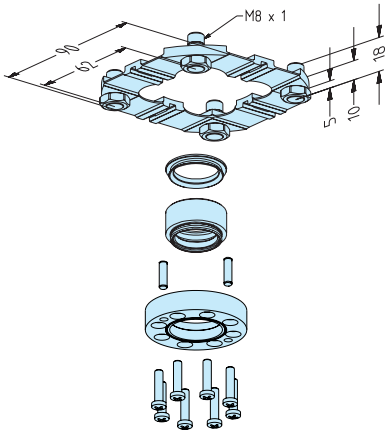

ER-008910 Set of spacer plate 60x20x3mm 8 pieces

INOX

Version Set of 8 plates. Ground, hardened.
Application To fit underneath clamping beams to raise the Z-support by 3 mm. This prevents collisions in the working range of the lower flushing nozzles.

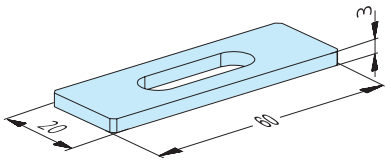

ER-157410 Control box 1-fold

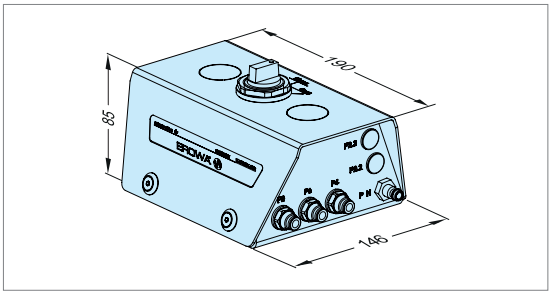

Version	Manual control box for 1 chuck. To control the opening / reclamping / cleaning functions. Pressure adjustable. Includes a set of tubes.
Connections	1 input (P IN) and 3 outputs (P2 Open / P3 Clean / P4 Reclamp).
Application	To operate chuck types ITS, ITS Compact, CombiChuck, PowerChuck P, VPC, UPC or PM Tooling.

ER-018936 GripperLink RCS PalletSet W

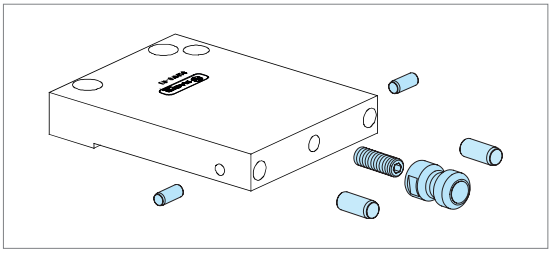

Version	Gripper coupling for RCS gripper, consisting of 4 positioning pins and a chucking spigot.
Application	On all EROWA handling devices equipped with the RCS coupling system.
Assembly	Glue in pins according to instructions, fit chucking spigot with bolt.
Note	Recess for EWIS chip (not included) in the chucking spigot.

ER-034533 FrameSet gripper bolts 4 pieces

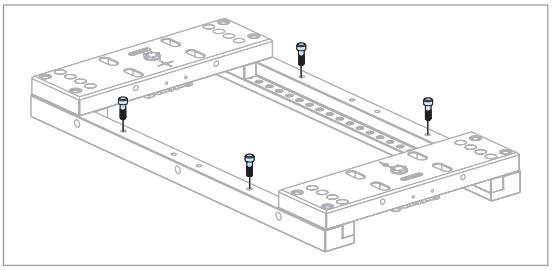

Version	Set of 4 gripper bolts.
Application	For FrameSet clamping frames with EROWA handling facilities.
Please note	Only in applications with FrameSet gripper automation.

ER-022465 Coupling kit FrameSet manual

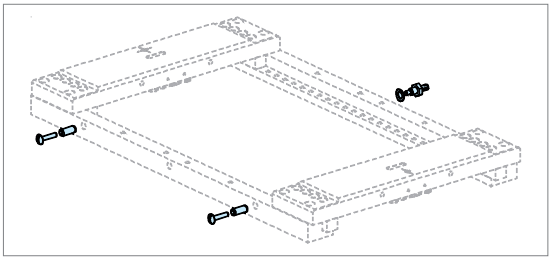

Version	Set including 2 gripper pins 2 M6x30 bolts 1 cord holder 1 spring washer
Application	To take up FrameSet frames with the EROWA Lift.

ER-008846 Slotted nut M8 10 pieces

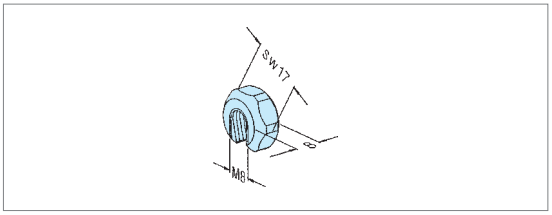

Quantity	10
Application	On long setscrews, to avoid time-consuming nut tightening.

ER-008848 Eye bolt M8
1 pair

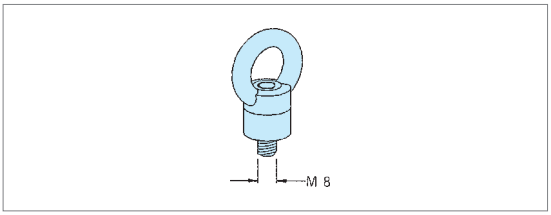

Quantity 2
Application To raise loaded clamping frames with a crane or lifting device.

ER-007799 Spacer plate large, 20x12x4 mm
50 pieces

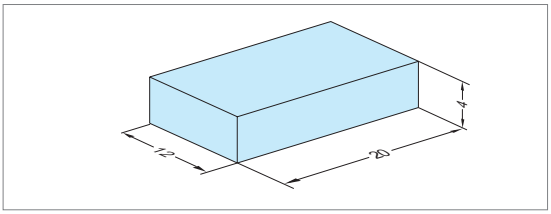

Quantity 50
Application As supports for chucking claws.

ER-007781 Spacer plate small, 20x4x4 mm
50 pieces

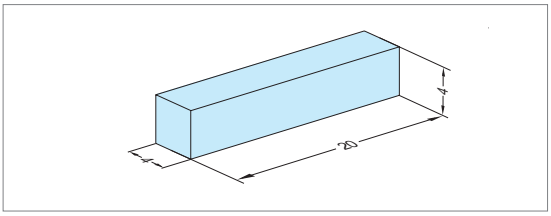

Quantity 50
Application As supports for chucking claws.

ER-001674 Erogrease (corrosion protection)
1 kg OKS 403

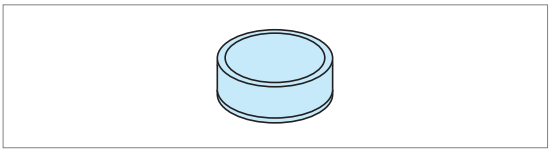

Version 1kg tin.
Application For the durable lubrication of guides, joints and threads submerged in water.

ER-010734 Branotect maintenance spray
0.4 liter

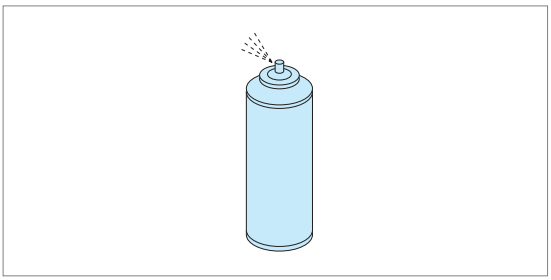

Version 0.4 litre aerosol.
Application For the maintenance and conservation of all the clamping elements used for WEDM purposes.

EROWA Wire EDM Tooling

Kit

ER-009696	**UnoSet Basic Kit manual**
ER-007962	**UnoSet Basic Kit pneumatic**
Version	Basic tooling system equipment for WEDM centers.
Application	Suitable for the palletization of small and medium sized workpieces.
Mounting	Depending on the machine base, we recommend the multi-adapter plate ER-017198.
Kit contains	1 chuck 1 UniVise universal vise
Please note	For machine-specific information, please contact your EROWA dealer.

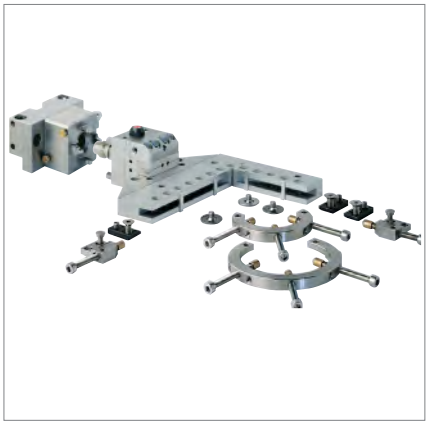

ER-017198	**Multi-adapter plate**
Application	To fit the UnoSet chuck to the machine base
Mounting	Through the adjustable borehole grids with the bolts supplied.



ER-021502	**Starter Kit PalletSet W, manual**
ER-021503	**Starter Kit PalletSet W pneumatic**
Version	Basic tooling system equipment for WEDM centers.
Application	Suitable for the palletization of medium-sized workpieces.
Mounting	Directly to the machine base with the fittings supplied.
Kit contains	1 chuck 1 fixholder 1 vise 1 manual control unit (pneumatic)
Please note	For machine-specific information, please contact your EROWA dealer.



	Starter Kit FrameSet, fix Starter Kit FrameSet, basic Starter Kit Frameset, manual Starter Kit Frameset, pneumatic
Version	Basic frame tooling system equipment for WEDM centers. Manually or pneumatically controlled chucks according to your choice. With the FrameSet fix version, the clamping frames are firmly bolted to the machine base.
Application	Suitable for the palletization of small and medium-sized workpieces.
Mounting	Directly to the machine base with the fittings supplied.
Kit contains	2 FrameSet fix plates or corresponding chucks 1 clamping frame of the machine-specific size 2 fitting clamping beams 1 set clamping equipment 1 set frame supports Fittings and pneumatic materials where necessary
Please note	For machine-specific information, please contact your EROWA dealer.

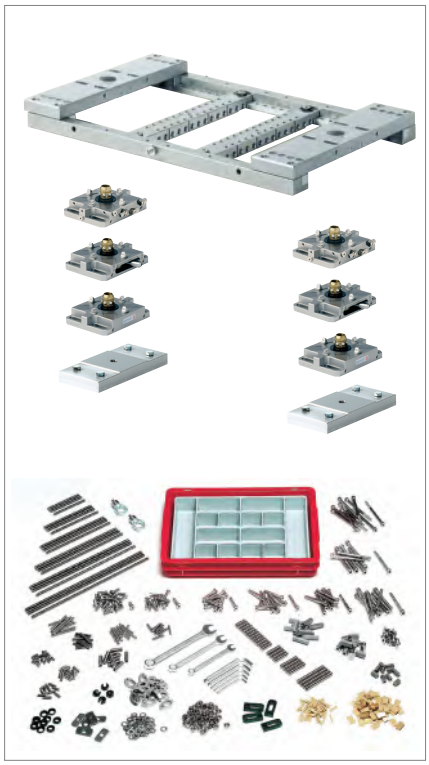

	ManoSet Kit XXL
Version	Basic frame tooling system equipment for WEDM centers. Fixed rails serve as the basis for the clamping beams.
Application	On large WEDM centers.
Mounting	Directly to the machine base with the fittings supplied.
Kit contains	1 set machine-specific base rails 2 fitting clamping beams 1 set clamping equipment
Please note	For machine-specific information, please contact your EROWA dealer.



EROWA Wire EDM Tooling

Set of clamping elements

EROWA's extensive accessory sets contain a number of practical and economically priced auxiliaries which turn clamping jobs into fun.



ER-019989 Set of clamping elements, PalletSet W

These materials have been packed in one solid plastic box.

Order number	Description	Units per set	Units supplied by order number
ER-002611	Hex key SW 5	1	1
ER-007729	Z-washer 3 mm	10	1
ER-007768	Hex key SW 3	1	1
ER-007781	Spacer, small	50	50
ER-007799	Spacer, large	50	50
ER-008884	Clip, universal	10	4
ER-017920	Countersunk bolt M8 x 14	10	1
ER-022109	Socket head bolt M8 x 20	10	50
ER-022110	Socket head bolt M8 x 30	10	50
ER-022111	Socket head bolt M8 x 40	10	50
ER-022113	Socket head bolt M8 x 60	10	50
ER-022118	Threaded pin M6 x 12	10	50
ER-022119	Threaded pin M6 x 20	10	50
ER-022120	Threaded pin M6 x 30	10	50
ER-022121	Threaded pin M6 x 40	10	50
ER-022122	Threaded pin M6 x 50	10	50

EROWA Wire EDM Tooling

Set of clamping elements for Wire EDM Tooling Standard

EROWA's extensive accessory sets contain a number of practical and economically priced auxiliaries which turn clamping jobs into fun.

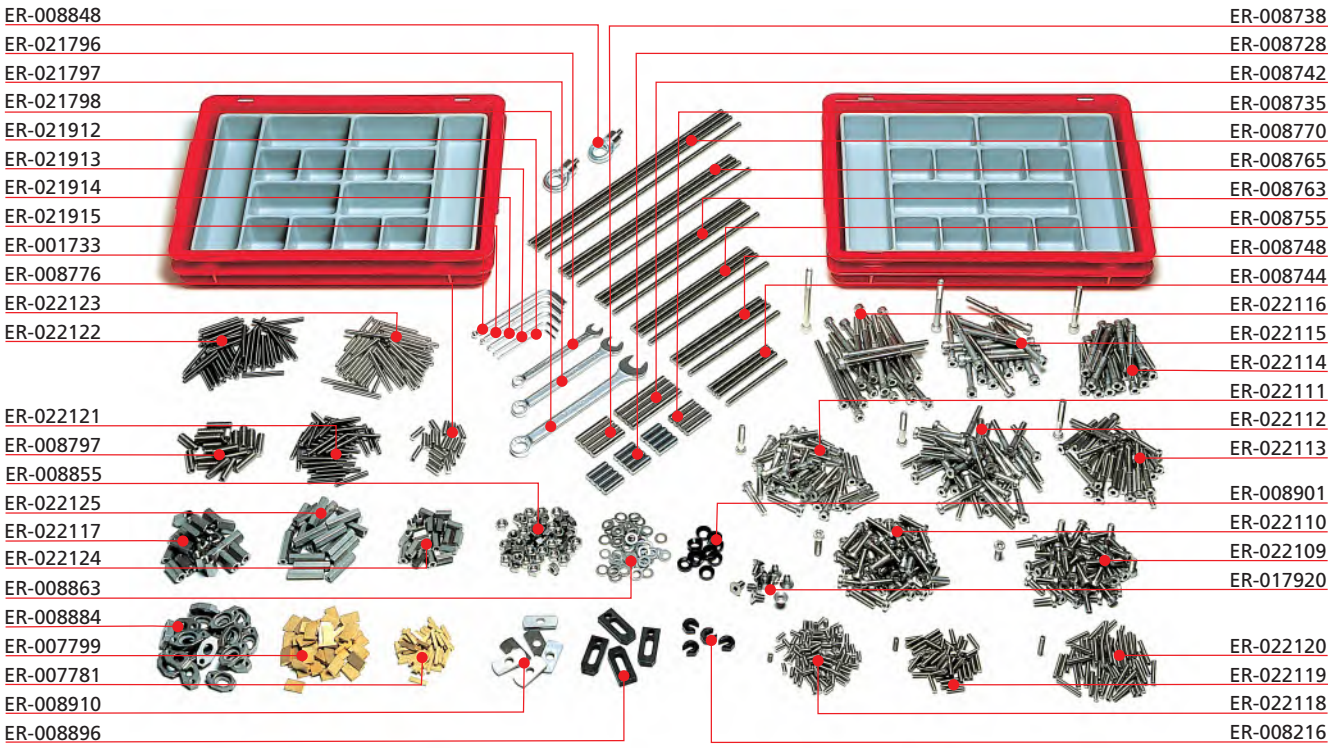

ER-008868 Set of clamping elements, standard

These materials have been packed in one solid plastic box.

Order number	Description	Units per set	Units supplied by order number
ER-001733	Hex key SW 8	1	1
ER-007781	Spacer plate, small	50	50
ER-007799	Spacer plate, large	50	50
ER-008216	Slotted nut M8	4	4
ER-008728	Straight pin ø9 L = 30	12	4
ER-008735	Straight pin ø9 L = 40	4	4
ER-008738	Straight pin ø9 L = 50	4	4
ER-008742	Straight pin ø9 L = 80	4	4
ER-008744	Threaded rod M8 x 100	4	4
ER-008748	Threaded rod M8 x 150	4	4
ER-008755	Threaded rod M8 x 200	4	4
ER-008763	Threaded rod M8 x 250	4	4
ER-008765	Threaded rod M8 x 300	4	4
ER-008770	Threaded rod M8 x 350	4	4
ER-008776	Threaded pin, hex, M8 x 20	20	50

ER-008868 Set of clamping elements, standard

These materials have been packed in one solid plastic box.

Order number	Description	Units per set	Units supplied by order number
ER-008797	Threaded pin, hex, M10 x 30	20	50
ER-008848	Eye bolt	2	2
ER-008855	Hex nut, M8 x 0.8	50	50
ER-008863	Washer	50	50
ER-008884	Bracket, universal	20	4
ER-008896	Bracket	4	4
ER-008901	Sliding disk	10	20
ER-008910	Spacer plate	8	8
ER-017920	Countersunk head bolt M8 x 14	10	1
ER-021796	Ring spanner, SW 10	1	1
ER-021797	Ring spanner, SW 13	1	1
ER-021798	Ring spanner, SW 17	1	1
ER-021912	Hex key SW 3	1	1
ER-021913	Hex key SW 4	1	1
ER-021914	Hex key SW 5	1	1
ER-021915	Hex key SW 6	1	1
ER-022109	Socket head bolt, hex, M8 x 20	50	50
ER-022110	Socket head bolt, hex, M8 x 30	50	50
ER-022111	Socket head bolt, hex, M8 x 40	40	50
ER-022112	Socket head bolt, hex, M8 x 50	40	50
ER-022113	Socket head bolt, hex, M8 x 60	20	50
ER-022114	Socket head bolt, hex, M8 x 70	20	20
ER-022115	Socket head bolt, hex, M8 x 80	20	20
ER-022116	Socket head bolt, hex, M8 x 100	20	20
ER-022117	Hex extension nut M8	20	20
ER-022118	Threaded pin, hex, M6 x 12	100	50
ER-022119	Threaded pin, hex, M6 x 20	50	50
ER-022120	Threaded pin, hex, M6 x 30	50	50
ER-022121	Threaded pin, hex, M6 x 40	50	50
ER-022122	Threaded pin, hex, M6 x 50	50	50
ER-022123	Threaded pin, hex, M6 x 60	50	50
ER-022124	Extension nut, hex / M6	20	20
ER-022125	Spacer, hex / M6 / L = 25	20	20

EROWA Wire EDM Tooling

set of clamping elements for Wire EDM Tooling Economy

EROWA's extensive accessory sets contain a number of practical and economically priced auxiliaries which turn clamping jobs into fun.

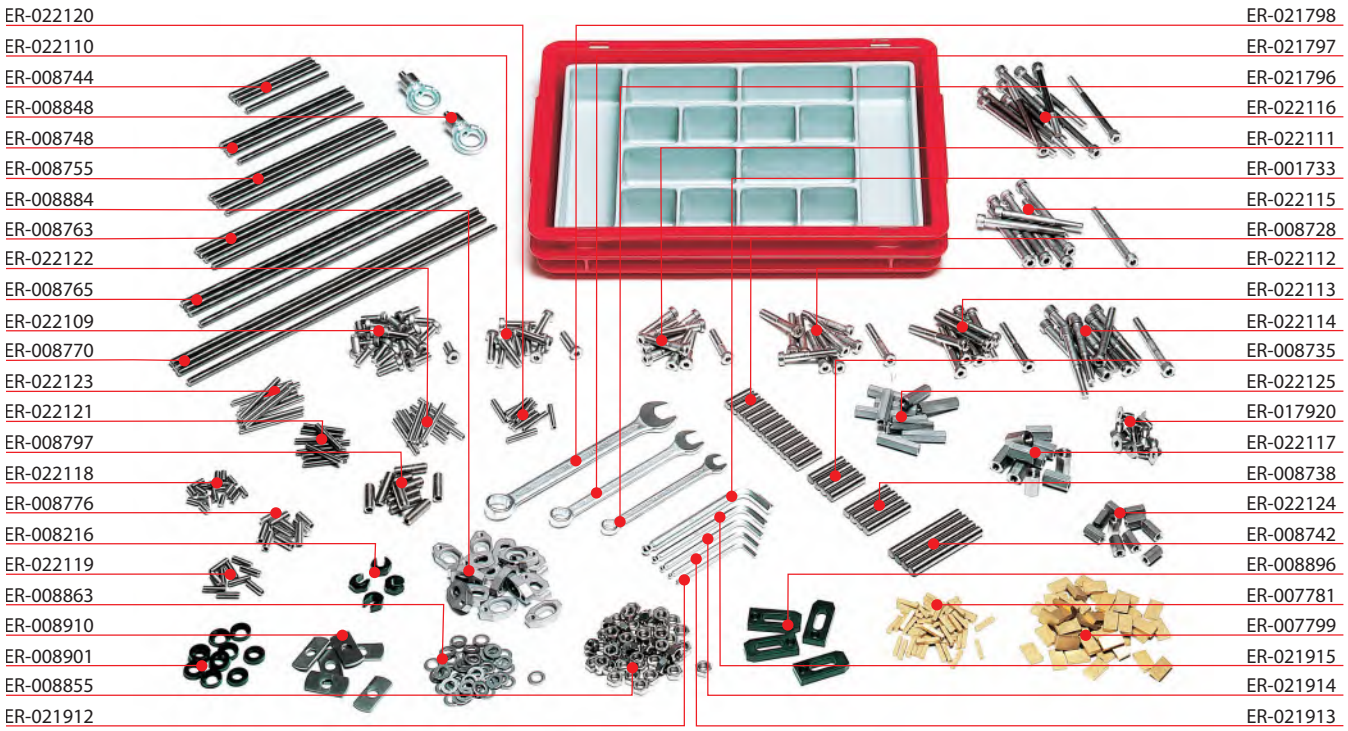

ER-008215 Set of clamping elements Economy

These materials have been packed in one solid plastic box.

Order number	Description	Units per set	Units supplied by order number
ER-001733	Hex key SW 8	1	1
ER-007781	Spacer plate, small	50	50
ER-007799	Spacer plate, large	50	50
ER-008216	Slotted nut M8	4	4
ER-008728	Straight pin, ø9 L = 30	12	4
ER-008735	Straight pin, ø9 L = 40	4	4
ER-008738	Straight pin, ø9 L = 50	4	4
ER-008742	Straight pin, ø9 L = 80	4	4
ER-008744	Threaded rod M8 x 100	4	4
ER-008748	Threaded rod M8 x 150	4	4
ER-008755	Threaded rod M8 x 200	4	4
ER-008763	Threaded rod M8 x 250	4	4
ER-008765	Threaded rod M8 x 300	4	4
ER-008770	Threaded rod M8 x 350	4	4
ER-008776	Threaded pin, hex, M8 x 20	10	50

ER-008215 Set of clamping elements Economy

These materials have been packed in one solid plastic box.

Order number	Description	Units per set	Units supplied by order number
ER-008797	Threaded pin, hex, M10 x 30	10	50
ER-008848	Eye bolt	2	2
ER-008855	Hex nut, M8 x 0.8	50	50
ER-008863	Washer	50	50
ER-008884	Bracket universal	15	4
ER-008896	Bracket	4	4
ER-008901	Sliding disk	10	20
ER-008910	Spacer plate	8	8
ER-017920	Countersunk head bolt M8 x 14	10	1
ER-021796	Ring spanner, SW 10	1	1
ER-021797	Ring spanner, SW 13	1	1
ER-021798	Ring spanner, SW 17	1	1
ER-021912	Hex key SW 3	1	1
ER-021913	Hex key SW 4	1	1
ER-021914	Hex key SW 5	1	1
ER-021915	Hex key SW 6	1	1
ER-022109	Socket head bolt, hex, M8 x 20	20	50
ER-022110	Socket head bolt, hex, M8 x 30	10	50
ER-022111	Socket head bolt, hex, M8 x 40	10	50
ER-022112	Socket head bolt, hex, M8 x 50	10	50
ER-022113	Socket head bolt, hex, M8 x 60	10	50
ER-022114	Socket head bolt, hex, M8 x 70	10	20
ER-022115	Socket head bolt, hex, M8 x 80	10	20
ER-022116	Socket head bolt, hex, M8 x 100	10	20
ER-022117	Hex extension nut, M8	10	20
ER-022118	Threaded pin, hex, M6 x 12	20	50
ER-022119	Threaded pin, hex, M6 x 20	10	50
ER-022120	Threaded pin, hex, M6 x 30	10	50
ER-022121	Threaded pin, hex, M6 x 40	10	50
ER-022122	Threaded pin, hex, M6 x 50	10	50
ER-022123	Threaded pin, hex, M6 x 60	10	50
ER-022124	Extension nut, hex / M6	10	20
ER-022125	Spacer, hex/M6/L = 25	10	20

EROWA Wire EDM Tooling

Set of clamping elements for Wire EDM Tooling XL

EROWA's extensive accessory sets contain a number of practical and economically priced auxiliaries which turn clamping jobs into fun.



ER-008301 Set of clamping elements, XL

These materials have been packed in one solid plastic box.

Order number	Description	Units per set	Units supplied by order number
ER-001417	Wrench SW13	1	1
ER-002613	Hex key SW 5	1	1
ER-007781	Spacer plate, small, 4 x 4 x 20 mm	50	50
ER-007799	Spacer plate, large, 4 x 12 x 20 mm	50	50
ER-008744	Threaded rod M8 x 100	4	4
ER-008748	Threaded rod M8 x 150	4	4
ER-008755	Threaded rod M8 x 200	4	4
ER-008763	Threaded rod M8 x 250	4	4
ER-008765	Threaded rod M8 x 300	4	4
ER-008770	Threaded rod M8 x 350	4	4
ER-008776	Threaded rod M8 x 20	10	50
ER-008786	Threaded rod M8 x 30	10	50
ER-008790	Threaded rod M8 x 40	10	50
ER-008794	Threaded rod M8 x 50	10	50
ER-008812	Countersunk head bolt M8 x 40	20	40
ER-008855	Hex nut M8 x 0.8D	20	50
ER-008861	Hex nut M8 x 3D	4	10
ER-008863	Washer ø 15 x 8,4 x 1.6	20	50
ER-008896	Clamp 45 mm	8	4

ER-008301 Set of clamping elements XL

These materials have been packed in one solid plastic box.

Order number	Description	Units per set	Units supplied by order number
ER-008901	Sliding disk	20	20
ER-010115	Clamps, aluminum, bronzed	4	1
ER-010120	Column, 100 mm	4	1
ER-010123	Column, 60 mm	4	1
ER-010126	Adjustment supports	4	1

EROWA PM Tooling

Pressing powder systematically

Pressed-powder parts are becoming ever more refined, and the diversity of product shapes is on the increase. Batch sizes are becoming smaller, which means that powder presses must be reset frequently.

EROWA has developed a solution for the minimization of resetting times: Single- or multi-level powder presses are equipped with the suitable PM tooling system. In this way, pressing tools can be exchanged in next to no time and with the highest degree of precision.

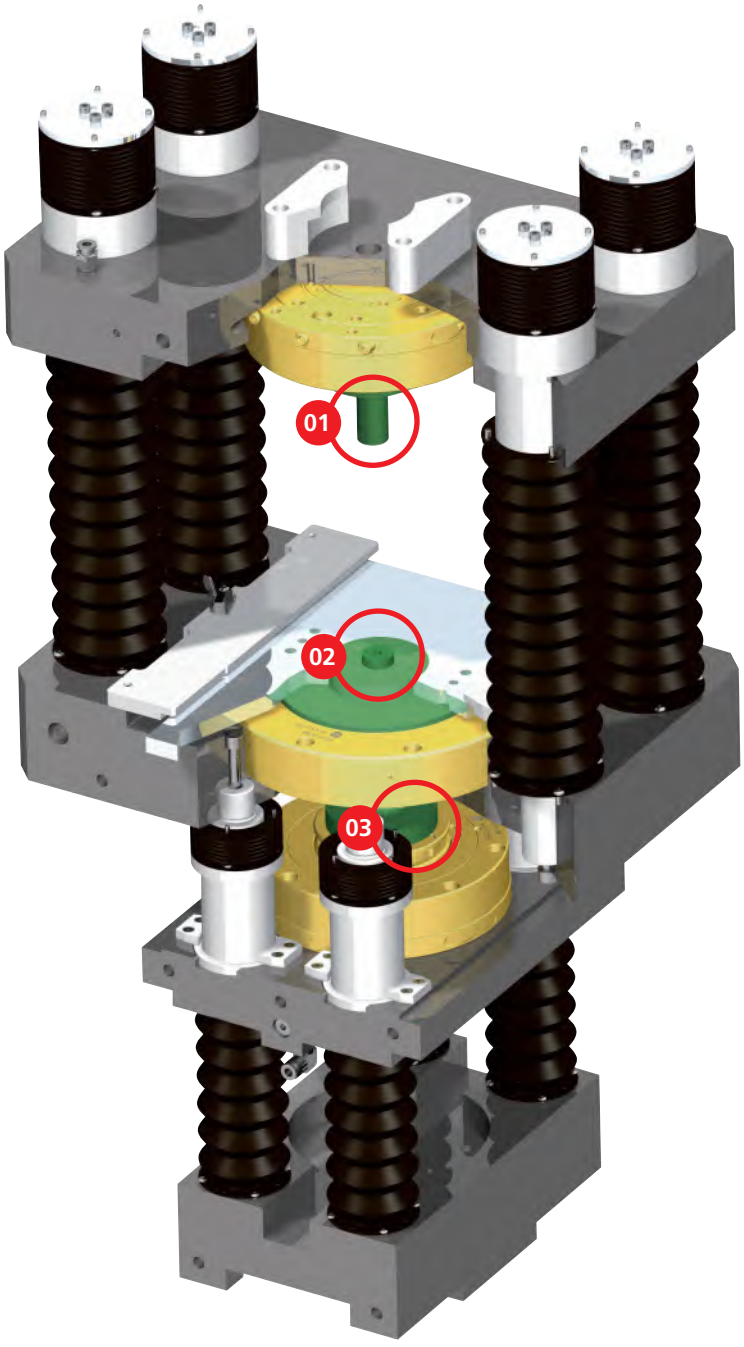

01 | **Upper punch**
on EROWA PM Tooling pallet:
Positioning accuracy < 0.002 mm.

02 | **Die-plate**
on EROWA PM Tooling pallet:
Positioning accuracy < 0.002 mm.

03 | **Lower punch**
on the EROWA PM Tooling pallet:
Positioning accuracy < 0.002 mm..

Applications

Handling

Manual / Loading facility / Robot

Function

Die-plate chuck

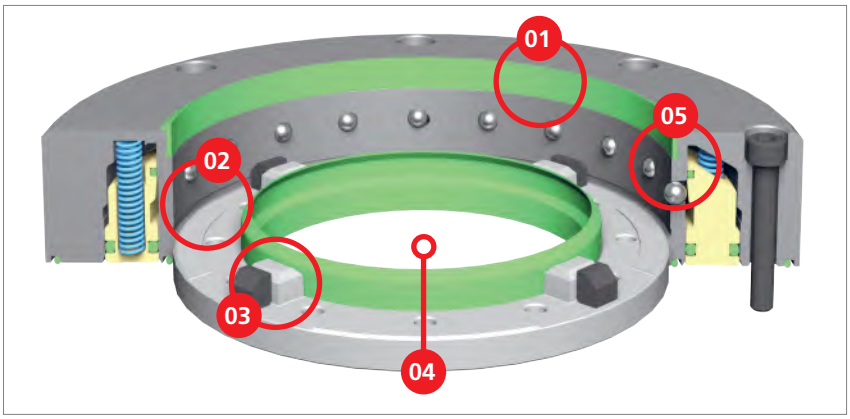

01 | Fully sealed system; resistant to powder, contamination and liquids.

02 | Large contact surface for great force absorption.

03 | Precise «P» centering.

04 | Wide opening for bottom punch.

05 | Patented outside clamping.

Punch chuck

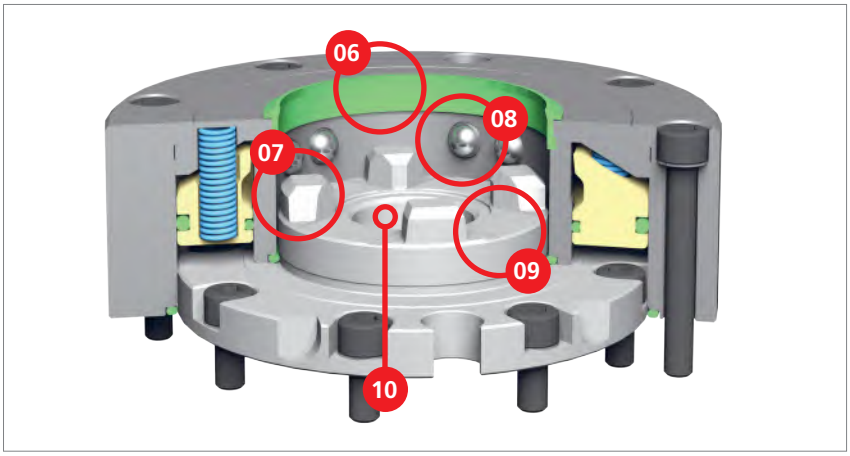

06 | Fully sealed system.

07 | Precise «P» centering.

08 | Patented outside clamping.

09 | Large contact surface for great force absorption.

10 | 25 mm clearance for center pin or second punch.

PM Tooling

Technical data - PM Tooling Precise

PM Tooling Precise	System size	Max. admissible pressing force
Punch chuck	PM60	500 kN
	PM85	1000 kN
Die-plate chuck	PM128	1000 kN

EROWA PM Tooling

Universal from milling to pressing

With the EROWA PM tooling system, punches and die plates are fitted to pallets and manufactured with datum-point precision.
Compatibility with other EROWA tooling systems enables your production machine to be fully automated. Workpieces run through the entire production chain on pallets:

FACTS

- High stability thanks to patented external clamping
- Repeating accuracy < 0.002 mm
- Pallets 4x90° indexable
- User-friendly
- Many adaptation possibilities



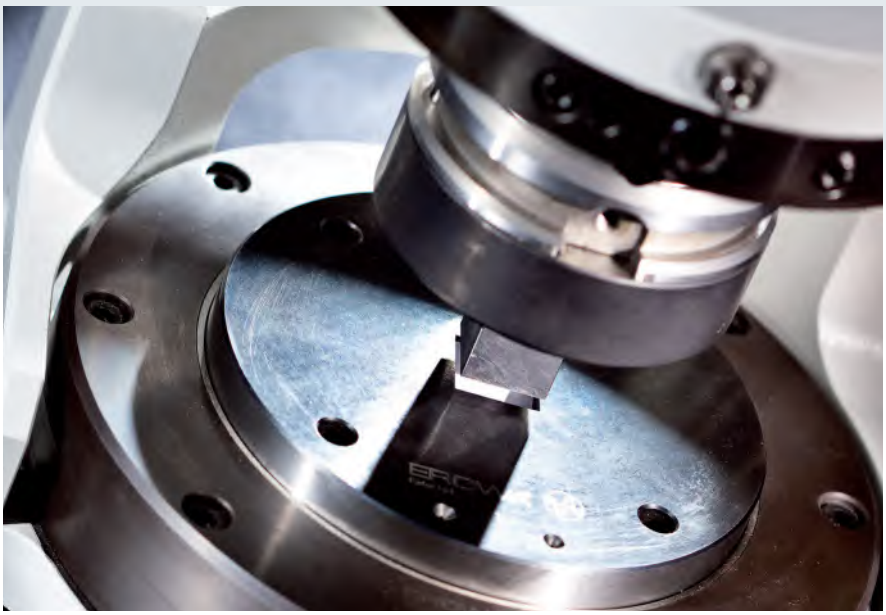

Precision is required to produce powder pressings of the best quality. EROWA's high-precision quick-clamping systems play a crucial role here.

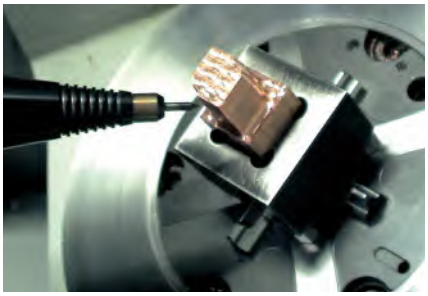

Milling
Electrodes used to EMD the molds are machined on ITS system holders.

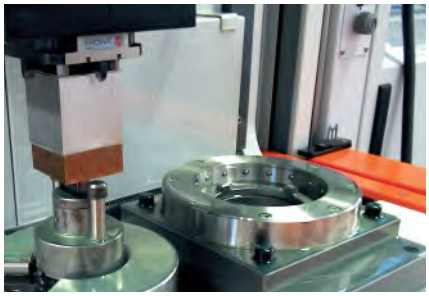

EDM
Shapes in the surface of the punches are EDMed.

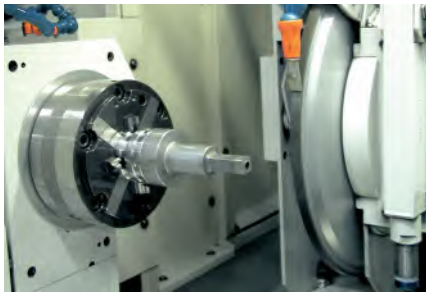

Grinding
Punches may also be machined on cylindrical grinding machines.



Wire-EDM
The contours are produced on a WEDM center. The reference position is provided by the chuck.



Powder pressing
Top and bottom punches and the die plate are inserted into the press. The reference positions are provided by the precisely aligned chucks.



EROWA PM Tooling

For great part diversity



To make it easier for you to find your way about the fields of application for EROWA products, we use the following symbols in all our documents:

1. Manual operation
2. Operate with compressed air jet
3. Operate with manual valve
4. Operate with manual control unit
5. Operate with electro-pneumatic control unit
6. With central flushing clearance
7. Suited for submerged operation
8. Corrosion-resistant material
9. Suited for automatic operation
10. Handling with EROWA Robot gripper S
11. Handling with EROWA Robot gripper Combi
12. Handling with EROWA Robot gripper C
13. Handling with EROWA Robot gripper 72
14. Handling with EROWA Robot gripper 115
15. Handling with EROWA Robot gripper 148
16. Handling with EROWA Robot gripper RN PC 210
17. Handling with EROWA Robot gripper RCS
18. Handling with EROWA Robot gripper WGS-500

EROWA PM TOOLING

PM Tooling	Chucks	330
PM Tooling	Pallets	332
PM Tooling	Accessories	334

For chip-removing processes

For EDM sinking

For WEDM

EROWA PM Tooling Precise

Chucks

Technical data	PM chucks
Repeatability	< 0.002 mm
Indexation	4 x 90°
Opening with compressed air	min. 6 bar
Clamping	Spring pressure

ER-047544 Die-plate chuck PM128 II Precise

Version	Steel, hardened. Through borehole ø 86. External seal.
Clamping power	23,000 N (reclamped at 6 bar)
Connections	At the rear, with two lines.
Operation	With control unit.
Application	On milling machines and powder presses. To accommodate die-plate pallets PM128 Precise.

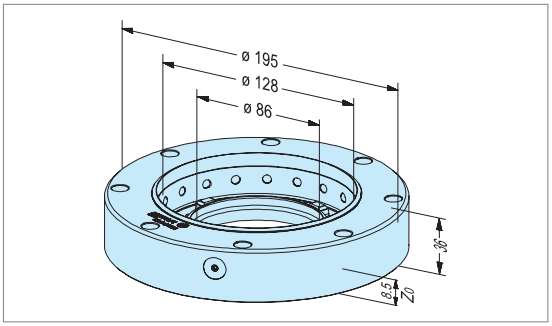

ER-040697 Chuck PM85 Precise

Version	Steel, hardened, corrosion-resistant. Through borehole ø 25.
Clamping power	9000 N.
Connections	At the rear, with two lines.
Operation	With control unit.
Application	On milling machines, lathes, EDM/WEDM centers and powder presses. To accommodate pallets PM85 Precise.

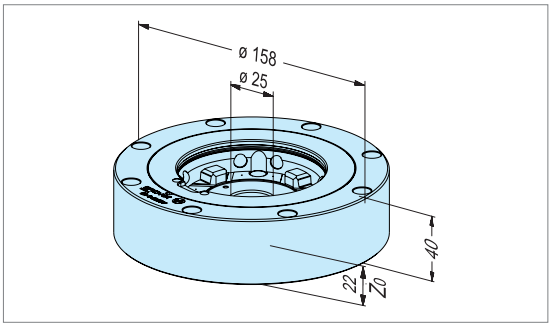

ER-055370 Chuck PM60 Precise

Version	Steel, hardened, corrosion-resistant. Through borehole ø 25.
Clamping power	6500 N.
Connections	At the rear, with two lines.
Operation	With control unit.
Application	On milling machines, lathes, EDM/WEDM centers and powder presses. To accommodate pallets PM60 Precise.

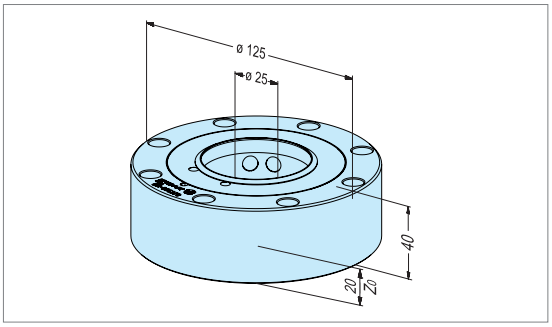

ER-047566 Die-plate chuck PM128 II Precise with base plate

Version	Steel, hardened, corrosion-resistant. Through borehole ø 86. External seal.
Clamping power	20000 N (reclamped at 6 bar).
Operation	Laterally with compressed-air gun or with control unit.
Application	On milling machines, lathes, grinding machines and EDM/WEDM centers. To accommodate die-plate pallets PM128 Precise and Multi.

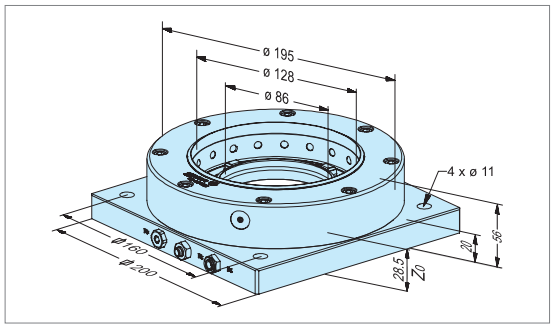

ER-040696 Chuck PM85 Precise with base plate

Version	Steel, hardened, corrosion-resistant. Through borehole ø 25.
Clamping power	9000 N.
Connections	Laterally, with two lines.
Operation	With control unit.
Application	On milling and grinding machines and on EDM/WEDM centers. To accommodate pallets PM85 Precise and Multi.

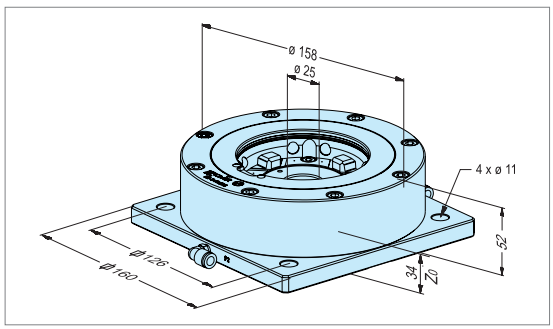

ER-047500 Chuck PM60 Precise with base plate

Version	Steel, hardened, corrosion-resistant. Through borehole ø 25.
Clamping power	6500 N.
Connections	Laterally, with two lines.
Operation	With control unit.
Application	On milling and grinding machines and on EDM/WEDM centers. To accommodate pallets PM60 Precise.

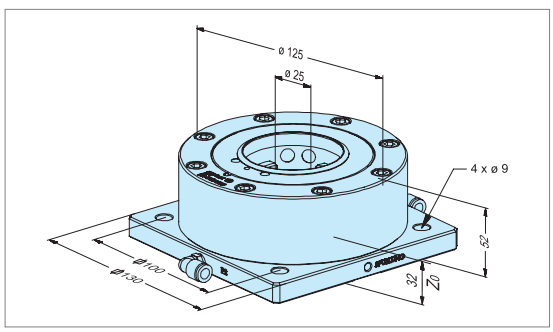

EROWA PM Tooling Precise

Pallets

ER-034680 **Die-plate pallet PM128 ø 52 Precise 1 piece**

INOX

Version	Steel, hardened, corrosion-resistant. Centering integrated in pallet. Inside ø 52 mm.
Application	For use on die-plate chuck PM128 Precise. To accommodate die plates, workpieces and fixtures for chip-cutting machines, EDM/WEDM centers and powder presses.
Fitting blanks	Through the pallet with M6 bolts or through the workpiece with M8 bolts.

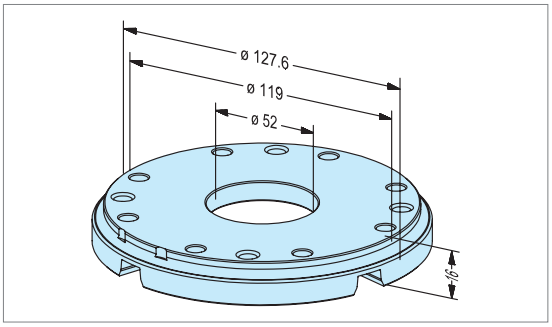

ER-046927 **Die-plate pallet PM128 ø 84.5 Precise 1 piece**

INOX

Version	Steel, hardened, corrosion-resistant. Centering integrated in pallet. Inside ø 84.5 mm.
Application	For use on die-plate chuck PM128 Precise. To accommodate die plates, workpieces and fixtures for chip-cutting machines, EDM/WEDM centers and powder presses.
Fitting blanks	Through the pallet with M6 bolts or through the workpiece with M8 bolts.

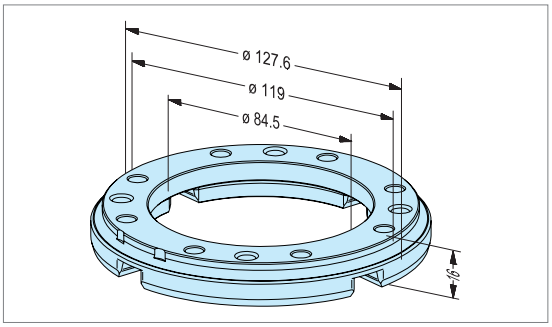

ER-081885 **Die-plate pallet PM128 ø 135 Precise for gripper PM128**

INOX auto

Version	Steel, hardened, rust-resistant. Centering integrated in the pallet.
Application	For use on PM128 Precise chucks. To accommodate workpieces and fixtures in chip-cutting machining, EDM and WEDM, and powder pressing.
Mounting a blank	With freely choosable attachment boreholes within ø 120 mm (upper part unhardened).

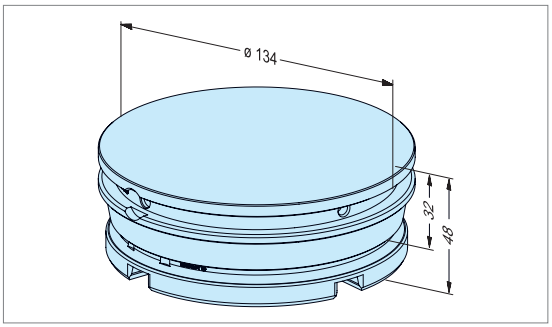

ER-082717 **Die-plate pallet PM128 ø 148 Precise for gripper ITS 148**

INOX auto 148

Version	Steel, hardened, rust-resistant. Centering integrated in the pallet.
Application	For use on PM128 Precise chucks. To accommodate workpieces and fixture in chip-cutting machining, EDM and WEDM, and powder pressing.
Mounting a blank	With freely choosable attachment boreholes within ø 140 mm (upper part unhardened).

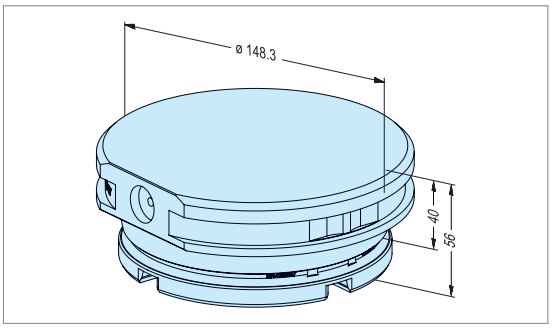

ER-040701 Pallet PM85 Precise 1 piece

INOX auto

Version: Steel, hardened, corrosion-resistant.
Centering integrated in pallet. Inside ø 25.

Application: For use on Chuck PM85 Precise. With chucking spigot ER-039839 on ProductionChuck 210 Combi, PowerChuck P, ITS Chuck 100 P and QuickChuck 100 P. To accommodate workpieces and fixtures for chip-cutting machines, EDM/WEDM centers and powder presses.

Fitting blanks: Through the pallet with M6 bolts or through the workpiece with M8 bolts.

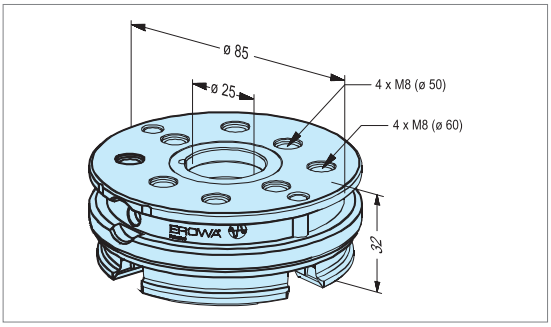

ER-055369 Pallet PM60 Precise 8 pieces

INOX auto

Version: Steel, hardened, corrosion-resistant.
Centering integrated in pallet. Inside ø 25.

Application: For use on Chuck PM60 Precise. With chucking spigot ER-041429 on ProductionChuck 210 Combi, PowerChuck P, ITS Chuck 100 P and QuickChuck 100 P. To accommodate workpieces and fixtures for chip-cutting machines, EDM/WEDM centers and powder presses.

Fitting blanks: Through the pallet with M6 bolts.

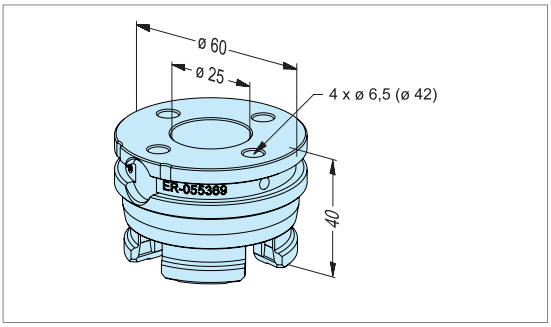

ER-035792 Adapter pallet H24 PM Precise for die-plate pallet PM128

INOX

Version: Hardened steel, corrosion-resistant.
Height of pallet: 24 mm.

Application: Serves as an adapter between the die-plate pallets PM128 Precise and Multi and an ITS Chuck 100 P or a PowerChuck P.

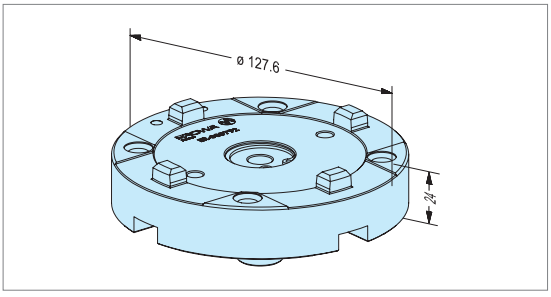

EROWA PM Tooling

Accessories

ER-039839	**Chucking spigot PM85 automatic 8 pieces**
ER-046075	**Chucking spigot PM85 automatic 1 piece**

auto

Version Steel, hardened. Automatic, with borehole ø 10.5.
Application In pallets PM85 Precise. To be fitted with securing ring.

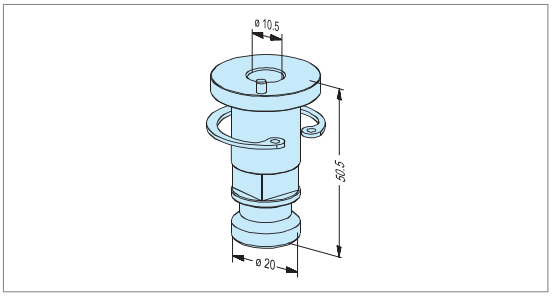

ER-041429	**Chucking spigot PM56 / PM60 manual 8 pieces**
ER-045759	**Chucking spigot PM56 / PM60 manual 1 piece**

Version Steel, hardened. Manual, with borehole ø 10.5.
Application In pallets PM56 and PM60 Precise. To be fitted with securing ring.

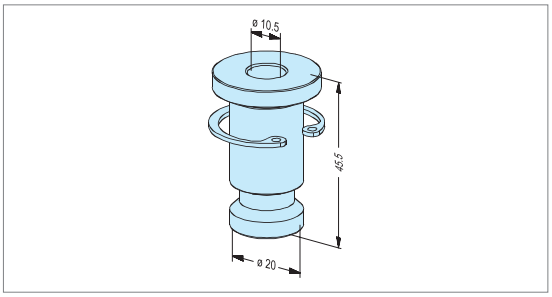

ER-049248	**Alignment pallet PM128 Precise for die-plate chuck PM128 Precise**

INOX

Version Steel hardened, corrosion-resistant. Ground alignment surface and centering borehole ø 10.
Application In tool- and mold-making. For alignment of the angle position and determination of the center of the die-plate chuck PM128 Precise.

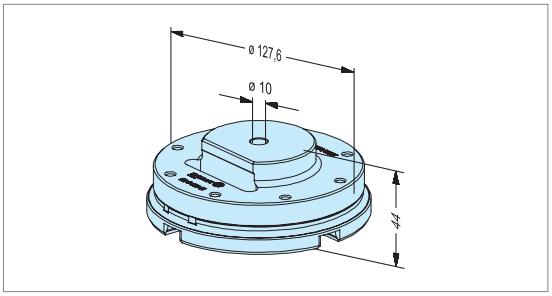

ER-042440	**Alignment pallet PM85 Precise**

INOX

Version Steel hardened, corrosion-resistant. Ground alignment surface, center borehole ø 15 and position borehole ø 10.
Application In tool- and mold-making. Alignment of the angle position and determination of the center of PM85 Precise chucks.

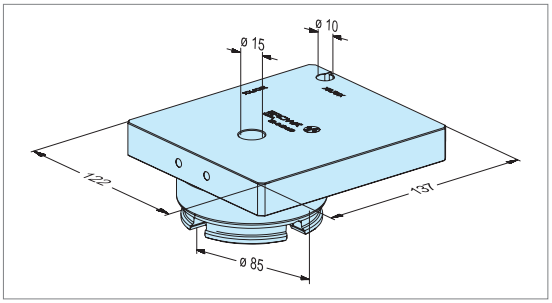

ER-042350 Alignment pallet PM56 / PM60 Precise

INOX

Version: Steel hardened, corrosion-resistant. Ground alignment surface, center borehole ø 9 and position borehole ø 10.

Application: In tool- and mold-making. To align the angular position and to determine the center of PM56 and PM60 Precise chucks.

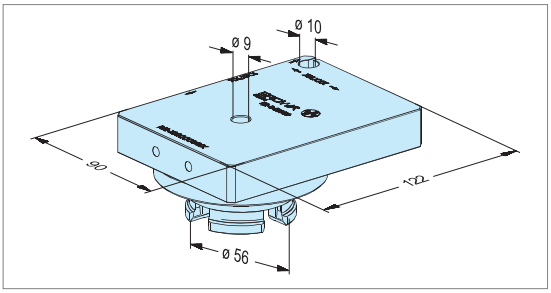

ER-043427 Alignment pin PM85 Precise

INOX auto

Version: Steel hardened, corrosion-resistant. Ground alignment surface and ø 45.

Application: Alignment of the radial and axial positions of PM85 Precise chucks.

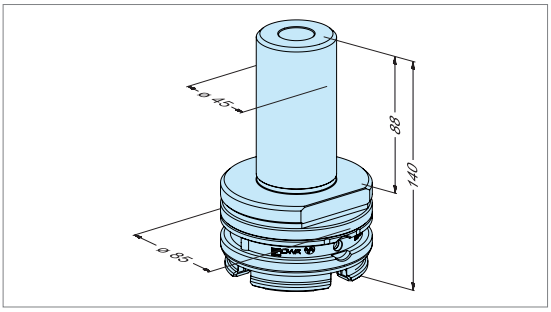

ER-043428 Alignment pin PM56 / PM60 Precise

INOX auto

Version: Steel hardened, corrosion-resistant. Ground alignment surface and ø 45.

Application: Alignment of the radial and axial positions of PM56 and PM60 Precise chucks.

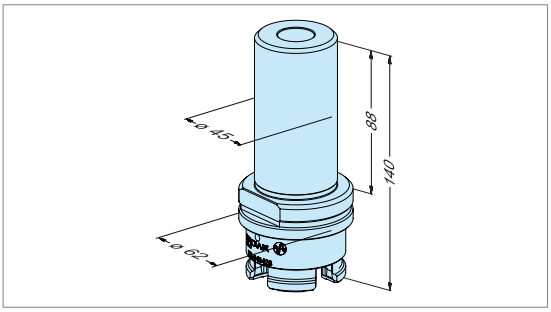

Please note: you can find the entire range in the EROWA PM Tooling System Catalog.

EROWA Spindle Adaptation

Minimize resetting time - increase productivity!

With the help of EROWAs spindle-adaptation solution, productive time - for instance in circular grinding - can be substantially increased.

The changeover from a three-jaw chuck to a pneumatically operated tooling system and to customized jigs only takes a few seconds - whilst the highest degree of precision is retained. The basis for all adaptations is the EROWA PM chuck. It is integrated with the machine spindle with the help of a suitable flange. The overall solution is impressive, not least owing to its robust and compact design.

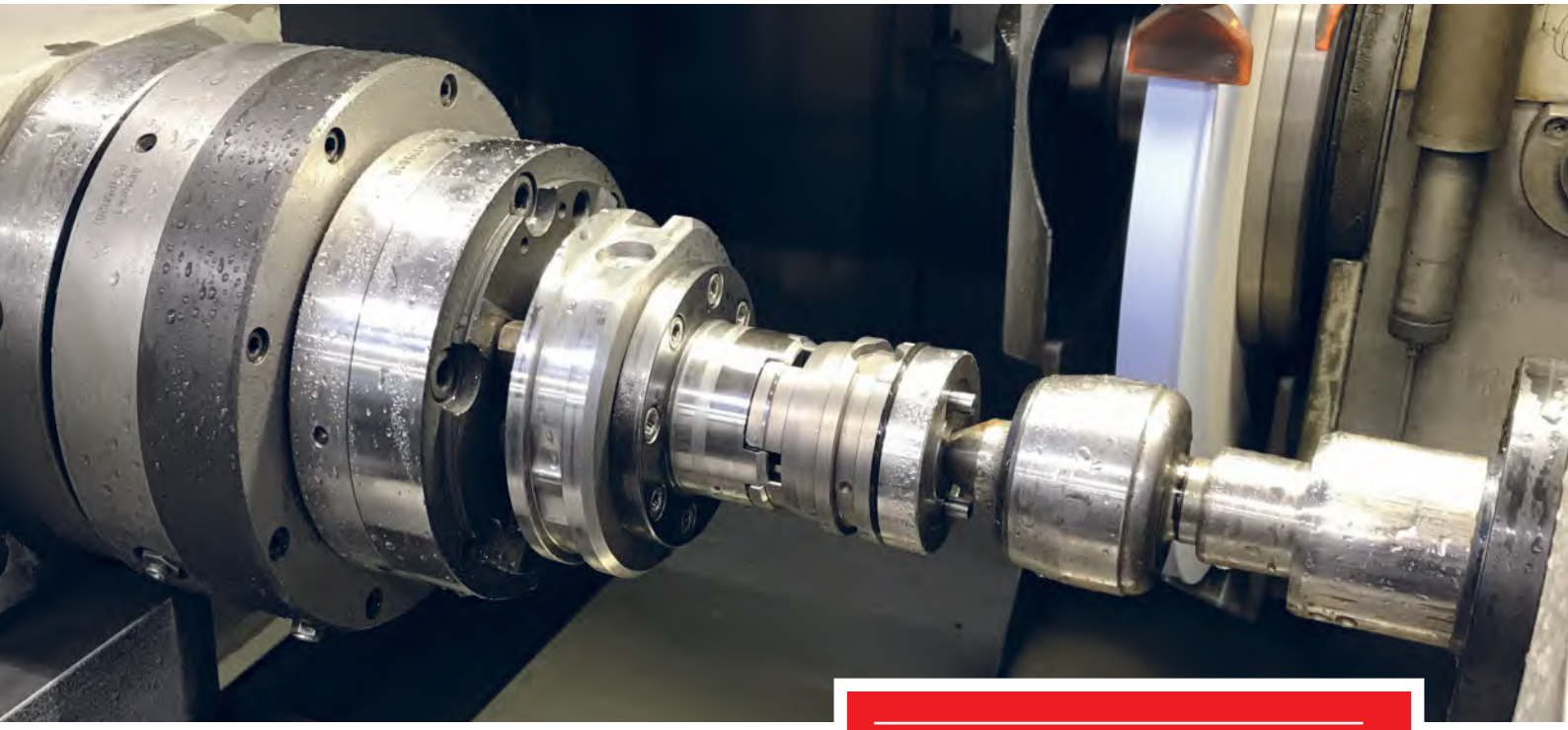

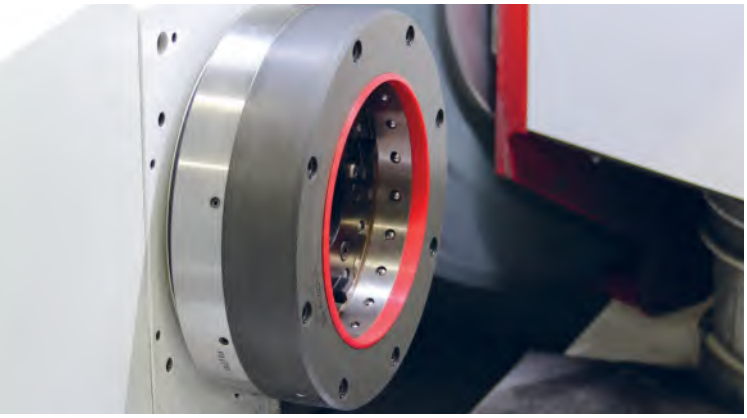

FACTS

- Substantially shorter resetting times
- Minimum height
- Highest stability and repeatability
- Maximum concentric accuracy
- Pneumatic control of adaptations
- Fully sealed
- Capable of being automated

EROWA Spindle Adaptation

EROWA tooling systems recommended for spindle adaptations

400 x 400 x 400 mm



EROWA ProductionChuck 210

The PC 210 chuck is available with a ø 81 mm through-hole or as a Combi variant with an integrated PowerChuck P system. It combines the proven EROWA precision with compact design, enormous clamping force, and stability. The tooling system is ideally suited for use on lathes and cylindrical grinding machines. The round design allows optimum workpiece accessibility.

Depending on the machine

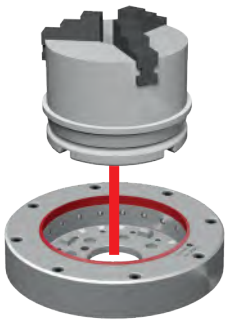

EROWA PM Tooling (powder metallurgy)

The EROWA PM Tooling system is used to mount punches, dies, and workpieces on pallets and manufacture them precisely to the system zero point. Compatibility with other EROWA tooling systems allows palletized punches to be continuous throughout the production chain. This means that punches can also be machined on cylindrical grinding machines.

160 x 160 x 250 mm



EROWA PowerChuck P

Whether on milling or drilling machines, on profile or surface grinding machines or on the spindles of dividing heads and lathes, the PowerChuck P is the consistent, flexible and precise basis for workpiece carriers.

140 x 140 x 140 mm

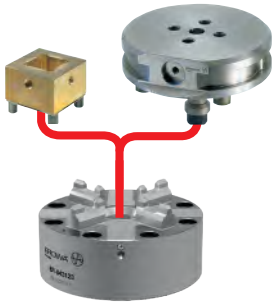

EROWA ITS (Integrated Tooling System)

The EROWA ITS chuck works on the basis that is as simple as it is ingenious. It holds both workpiece carriers and workpieces with unique precision, stability, and repeatability. Its uses are so versatile that it is the basis of a sophisticated modular workholding system.

EROWA Spindle Adaptation

Boundless diversity

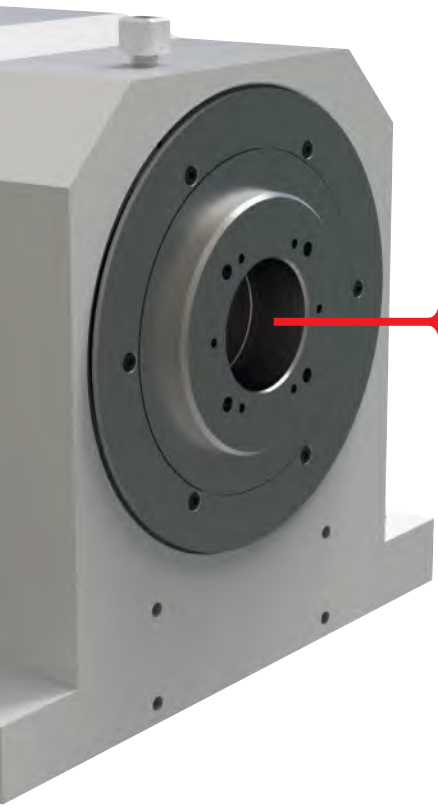

Manual
Operated via air gun

Automatic
Operated via rotary distributor



Production Chuck 210
universal – powerful – combinable
Clearance: ø 81 mm

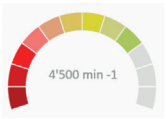

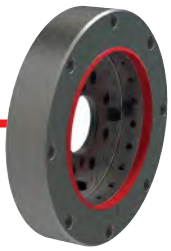

PM Tooling
versatile – compact – clever
Clearance:
- Up to ø 48 mm in combination with AirDock
- Up to ø 86 mm without AirDock





PowerChuck P
robust – flexible – smart

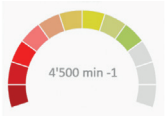



ITS
small size – proven – reliable



Possible options

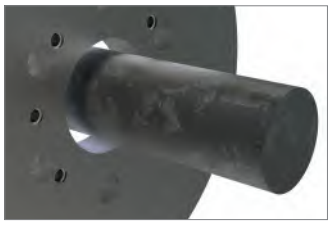

Central opening: For machining bar stock.

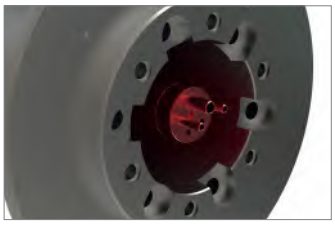

Rotatable pneumatic connector: For automatic actuation.



AirDock: Interface for compressed air up to 10 bar.

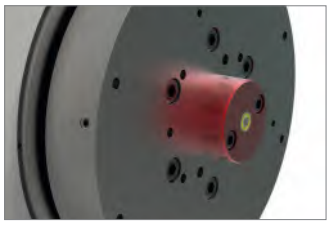

Media: Interface for oil, vacuum, coolant.

EROWA Spindle Adaptation

The advantages speak for themselves

Without EROWA spindle adaptation

With EROWA spindle adaptation

- Significantly reduced setup times
- Precise repeatability
- High flexibility

Three-jaw chuck ø 200 mm





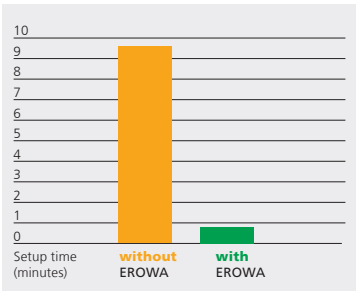

EROWA Power-Chuck P



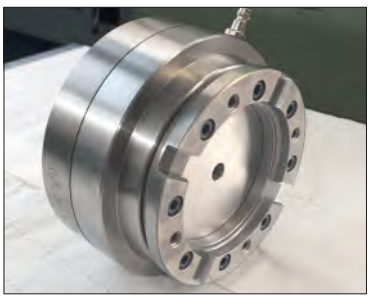

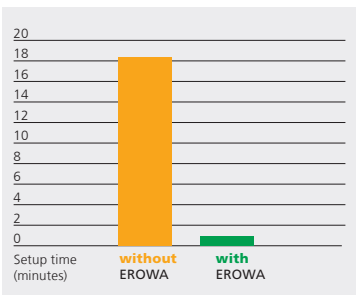

Three-jaw chuck ø 250 mm



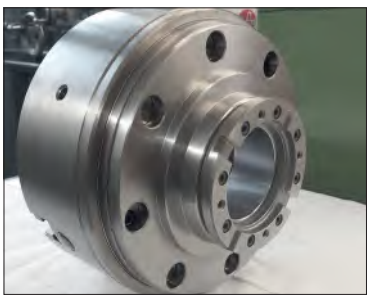

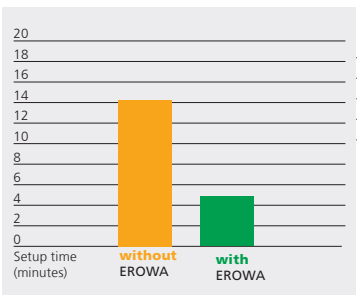

Collet-chuck





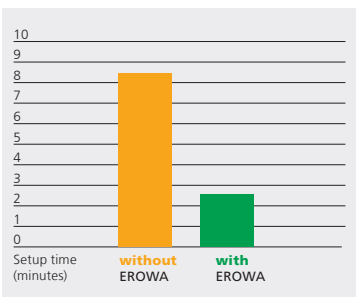

Customized designs

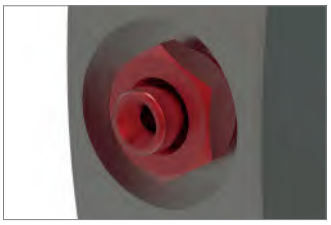

Manual: Actuated with an air gun.

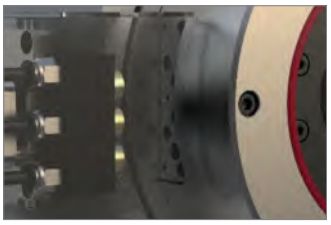

Automated: Connected to the machine.



Adapted: Third-party or in-house systems.

EROWA Spindle Adaptation

Flexible application

Additional tooling systems for turning or grinding applications can be found in the EROWA general catalog.
We will also be happy to check the adaptation of existing tooling devices for you – for full flexibility in your production.



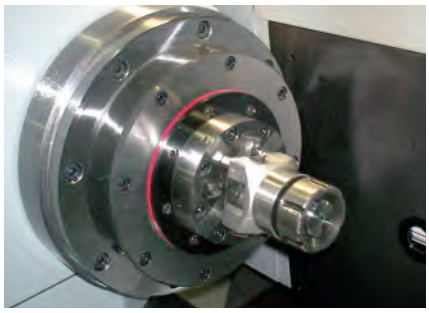

Combined
Countless possibilities for adaptation of EROWA systems and combinations.

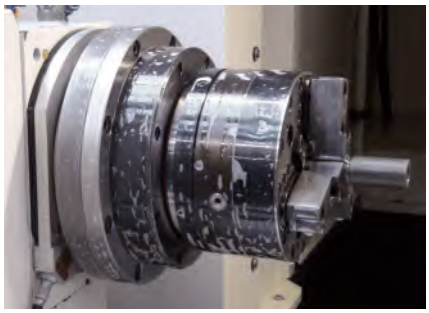

Adapted
Whether jaw chucks or pallets, manual or automated.

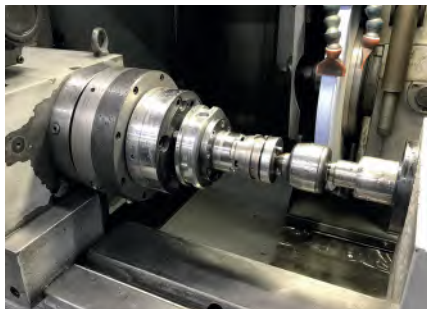

Integrated
Matches the part range and the machine interface.



Precise
Appropriate alignment components are available for each adaptation level.



Low profile design
Slim design and completely sealed.



Robust
Utmost stability and repeating accuracy even with large workpieces.

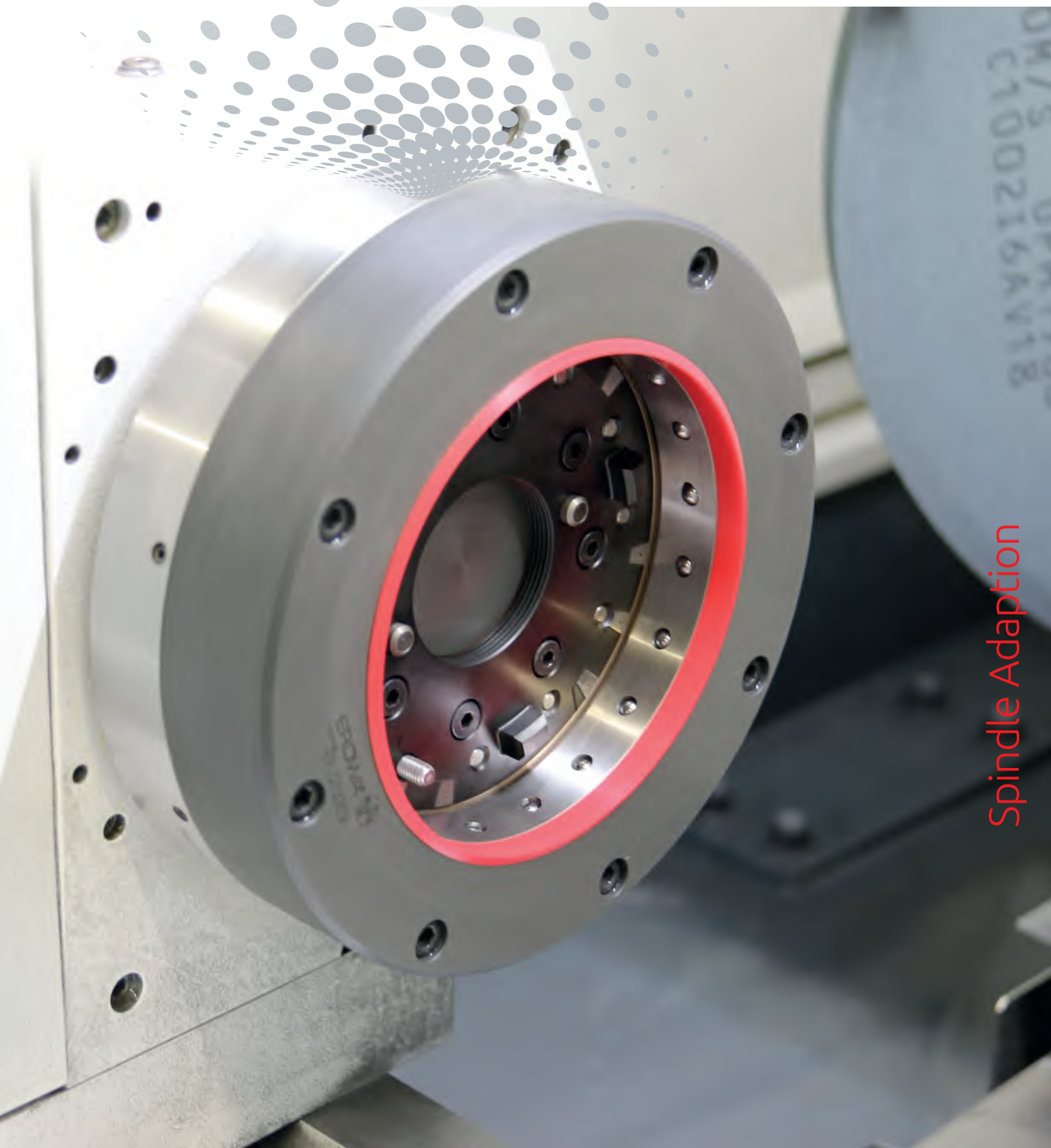

Spindle Adaption

EROWA quality measuring and presetting systems

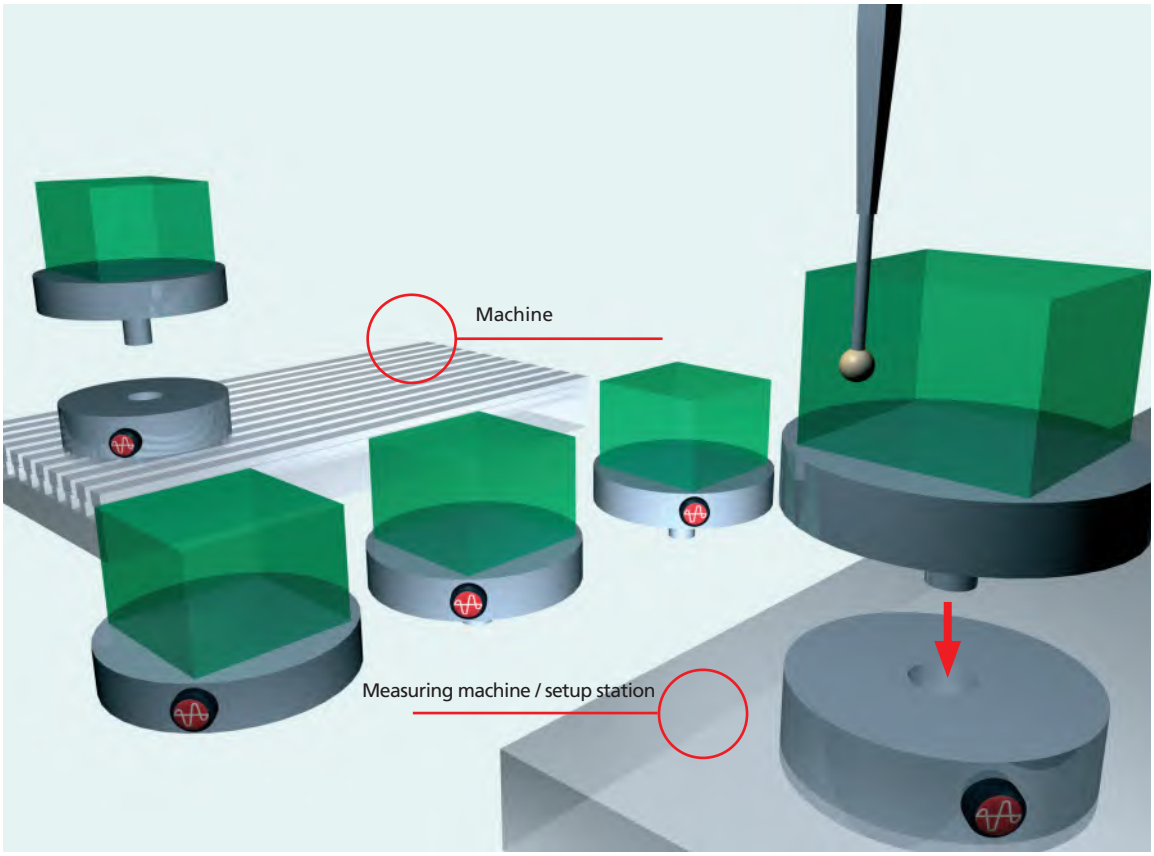

EROWA Measuring & Presetting

For chip-removing processes

For EDM sinking

For WEDM

Organization of electrodes and workpieces. All the workpieces and electrodes are set up outside the machine. If necessary, their offset values are determined outside the machine. Thus programs can be generated in advance, and automation becomes possible.
Quality measurements enhance process safety and are an important factor for successful quality management.

EROWA QUALITY MEASURING AND PRESETTING SYSTEMS



EROWA CMM Qi 348



EROWA PreSet 3D CNC 352



EROWA PreSet 3D MAN 354



EROWA PreSet 2D
EROWA PreSet 2D +C 356



EROWA PreSet Basic UPC 360
EROWA PreSet Basic PalletSet W 360
EROWA PreSet Basic UnoSet 360





Basic equipment / options for:
CMM Qi / PreSet 3D / PreSet 2D / PreSet Basic 362

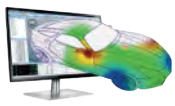

Software for EROWA measuring systems 364
- EROWA PreSet Software 366
- ARCO-CAD 368
- Metrolog X4 370
- EROWA Q-Measure 372
- EROWA CMM CubeScan Technology 373
- EROWA Quick Link XT 374
- EROWA JMS 4.0 Organization 376

EROWA CMM Qi

Top-precision quality measurements

Thanks to its solid design, the EROWA CMM Qi high-quality measuring station provides maximum mechanical precision, combining EROWA products into a consistent high-precision system.

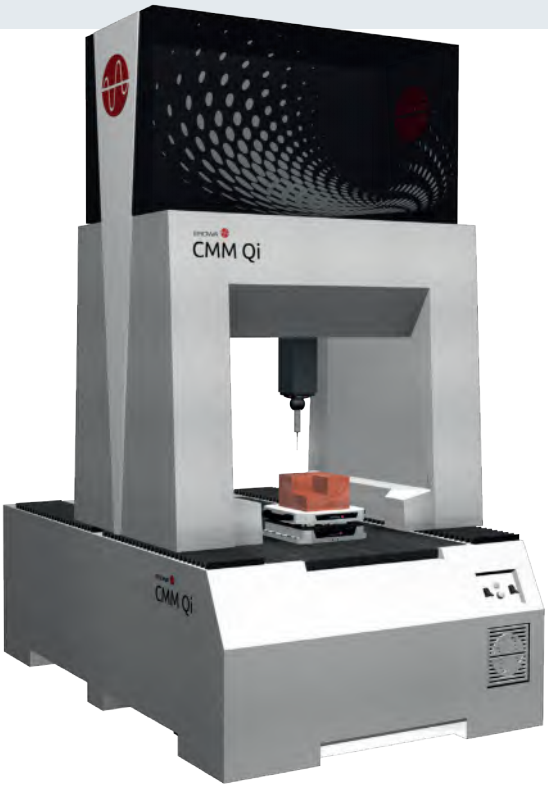

EROWA CMM Qi

- Measuring station (worktop with hole pattern for all EROWA tooling systems)
- Pneumatic control system
- PC and color printer (optional)
- Software for presetting and quality measurements
- Renishaw measuring probe (optional)
- Calibration sphere

For more information, please contact your EROWA dealer.

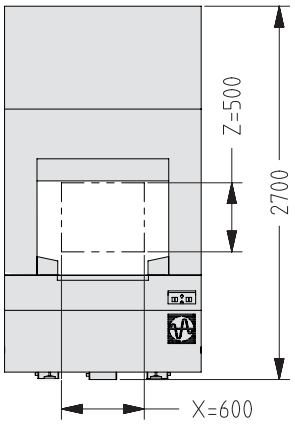

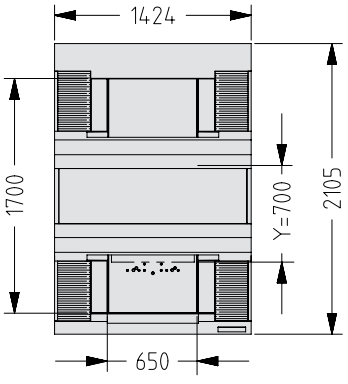

Technical data

	CMM Qi
X-axis travel	600 mm
Y-axis travel	700 mm
Z-axis travel	500 mm
Maximum distance between table and probe holder (without probe)	668 mm
Maximum distance between the columns at table height	650 mm
Usable area of the granite slab (with EROWA hole pattern)	650 x 1700 mm
Measuring uncertainty in the volume (as per ISO 10360/2)	
Standard	1.5 µm + L/500
High Precision	0.7 µm + L/500 (L in mm)
Machine dimensions	
Dimensions L x W x H	2100 x 1500 x 2700 mm
Maximum loadable workpiece weight	650 kg
Machine weight (without load)	2350 kg

FACTS

- Basic mechanical accuracy
- Solid natural granite plate and guides
- Insensitive to dirt thanks to interconnected axes
- Symmetrical portal design
- Centrally guided axes
- Prepared for EROWA clamping systems
- Can be automated with EROWA handling devices
- All axes temperature compensated

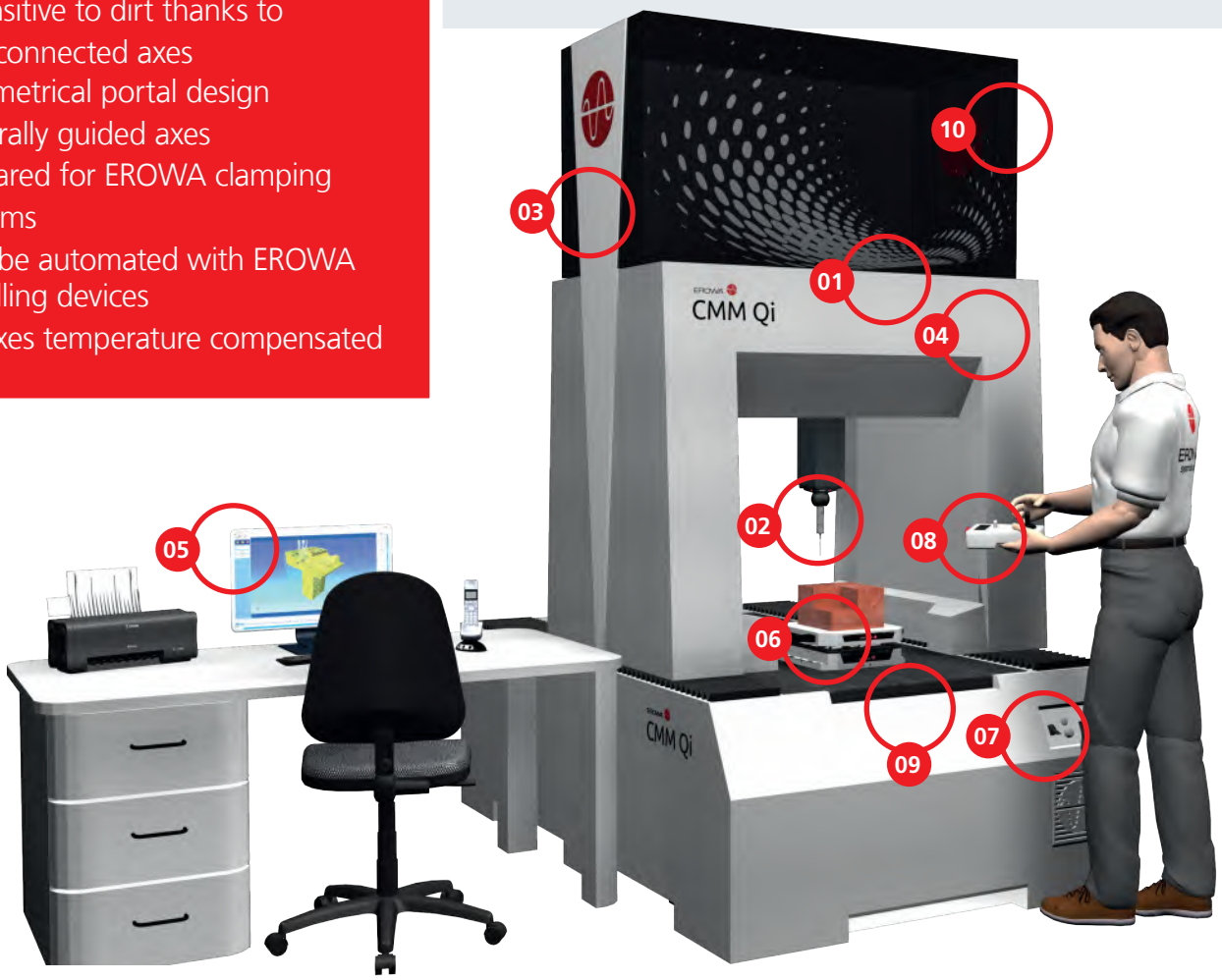

Note:
For a variety of chucks we offer the appropriate kit for adapting to the measuring machine.

01 | Rails
High-precision Renishaw rails with optical read heads ensure excellent results.

02 | Renishaw probing systems
high-precision measuring probe systems for the greatest flexibility.

03 | Centric drives
Centric drives for symmetric movements.

04 | Symmetric machine layout
Special aluminum casting for excellent shape and temperature stability as well as guide rails made from granite.

05 | Software
With the EROWA presetting and measuring software, presetting data can be recorded in a very simple way and quality measurements are both precise and retraceable.

06 | Various clamping systems
Depending on your requirements, one or more EROWA tooling systems can be mounted to the solid table. All the necessary boreholes already exist. FrameSet, MTS, UPC or ITS – all variants are supported.

07 | Integrated operation
Already prepared for the control of the various tooling systems.

08 | Joystick control
Optimal operation for secure measurements. One control lever for all axes. Optionally also available as a wireless joystick.

09 | Natural granite
The solid granite slab combined with the specially cast portal constitutes the basis for precision.

10 | Full enclosure
Best possible shielding against external influences as well as controlled air circulation around the measuring system. Maximum precision even in a production environment.

EROWA CMM Qi

Continuous quality monitoring

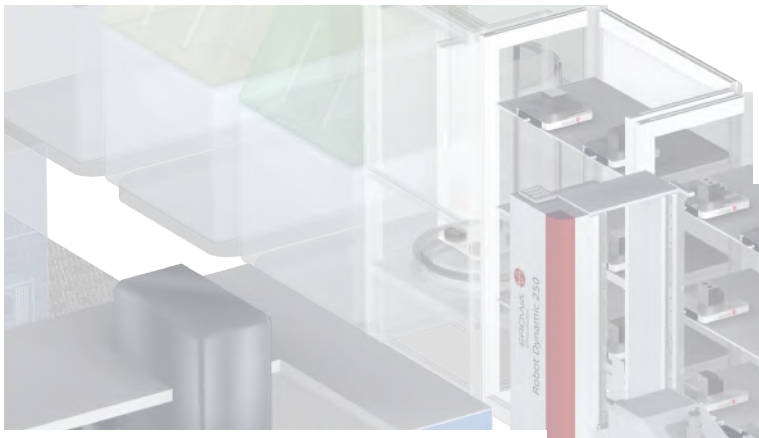

Detailed information on EROWA automation solutions can be found in this catalog in the "EROWA Automation" section (from page 379). Or contact your EROWA dealer.

EROWA Automation

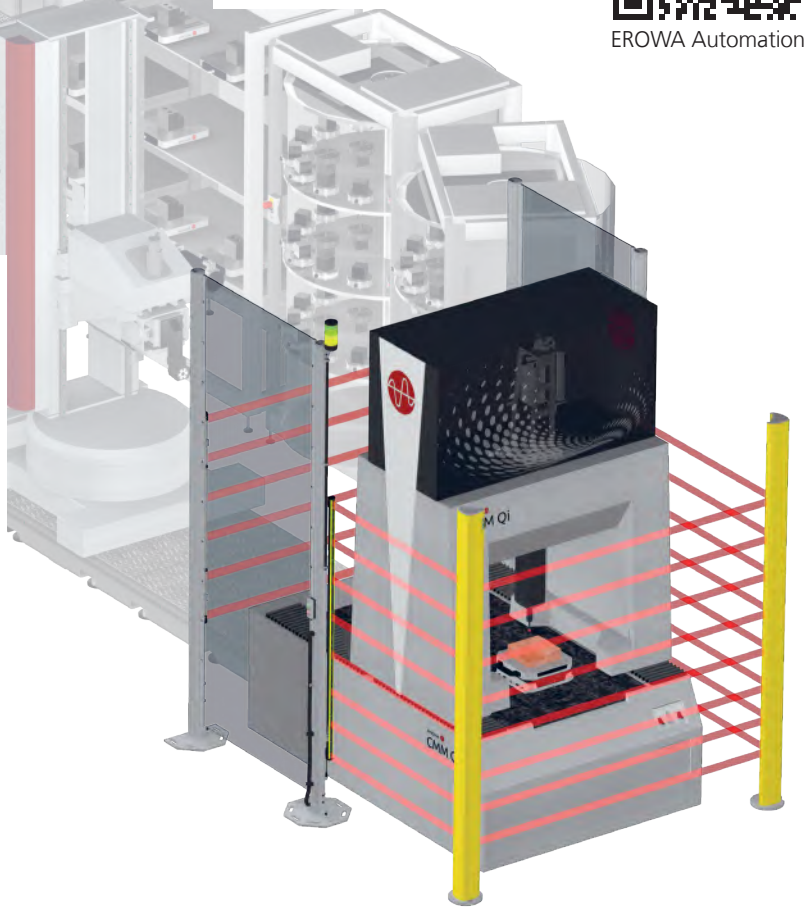

Automated intermediate or final inspections increase process reliability significantly. The measuring station is utilized better and more cost-efficiently.

The consistent workpiece palletizing system on all machines is a prerequisite for process automation. The palletizing system forms the flexible and precise interface between the manufacturing machine, the CNC measuring station, and the workpieces.

With the appropriate EROWA Robot and the EROWA JMS 4.0 process control system, we offer a complete solution from a single source.



With the automatic pallet detection feature via RFID chip, you can view where each part is located in the manufacturing chain at any time. Status messages can also be sent to the operator via SMS.



Using the automation kit (option), the CMM Qi can be loaded by an EROWA robot. The CNC control allows automatic quality measurements.

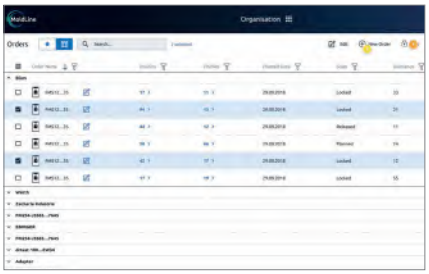

The automatic in-process or final check boosts process reliability to an essential degree. The machine is used to better capacity and thus becomes more profitable. Also, reject costs can be reduced.

EROWA CMM Qi

Custom options



Interior lighting for CMM Qi
With the interior lighting, your measuring place is always optimally illuminated. The special cold light lamps ensure that the lighting has no influence on your measurement.

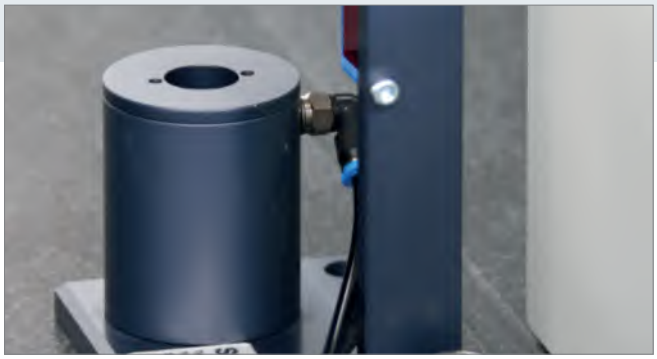

Stylus cleaner
In automated quality control, it is difficult to ensure the cleanliness of the stylus systems. With the stylus cleaner you have the possibility to clean your stylus system before each measurement to avoid unwanted incorrect measurements.

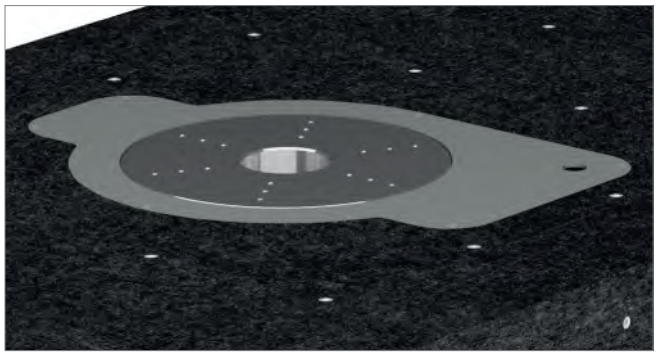

Turntable - measuring in another dimension
The rotary table, which is completely integrated in the measuring machine, enables measurements in a 4th axis. This means that in addition to prismatic components, rotationally symmetrical parts can also be measured quickly and efficiently.



more information: Weblink

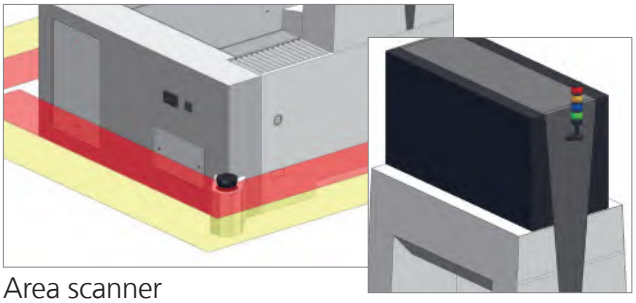

Area scanner

Status LED Lamp

Happy to fulfil individual customer wishes
Whether dial gauge holder, chuck assembly, status LED, hour counter or area scanner, we configure the measuring system according to your needs.

Maintenance contracts hardware / software
Tailor-made maintenance contracts for hardware and software are available for an all-round carefree package.
Periodic updates ensure that your software is always up to date and supports the latest technologies. Furthermore, prompt support is guaranteed for all challenges. Regular maintenance also guarantees high availability of the equipment.

With the corresponding maintenance contracts, you thus ensure the compatibility and operational reliability of your measuring system at all times.

EROWA PreSet 3D CNC

Simple presetting - automatic series measurements

Machine tools need to be relieved of unproductive tasks as much as possible. Presetting and measuring workpieces and electrodes are tasks that can be carried out more efficiently on a measuring station.
With the Preset 3D CNC, you provide your operators with a machine that is perfectly designed for this task.



EROWA PreSet 3D CNC

- Measuring station (worktop with hole pattern for all EROWA tooling systems)
- Pneumatic control system
- PC and color printer (optional)
- Software for presetting and quality measurements
- Renishaw measuring probe (optional)
- Calibration sphere

For more information, please contact your EROWA dealer.

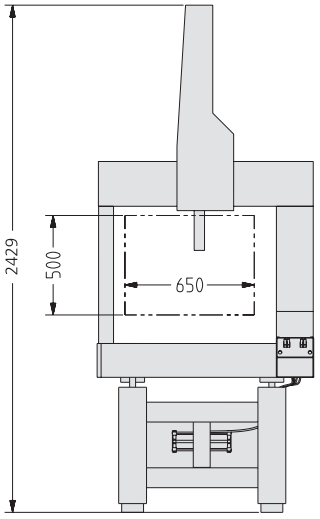

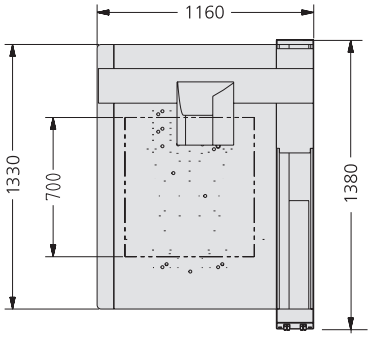

Technical data

	PreSet 3D CNC
X-axis travel	650*1 mm
Y-axis travel	700*1 mm
Z-axis travel	500*1 mm
Maximum distance between table and probe holder (without probe)	688 mm
Maximum distance between the columns at table height	819 mm
Usable area of the granite slab (with EROWA hole pattern)	819 x 1330 mm
Measurement inaccuracy in the volume (as per ISO 10360/2)	2.5µm + L/300
Machine dimensions	
Dimensions LxWxH	1380 x 1160 x 2429 mm
Maximum loadable workpiece weight	1900*2 kg
Machine weight (without load)	775 kg

Other available sizes

Travel X-axis	500 mm - 1500 mm
Travel Y-axis	600 mm - 3000 mm
Travel Z-axis	400 mm - 1300 mm

*1 Other movements available on request. Depending on the machine type, the values may diverge from the data indicated here.
*2 Depending on the machine size.

THE FACTS

- Animated presetting programs
- User-friendly quality measuring software
- Integrated hole pattern for mounting the EROWA chucks
- Can be automated
- Reliable workpiece identification with EWIS™
- Temperature check
- Comprehensive software package for presetting, quality measurements and automation



Note:
For a variety of chucks we offer the appropriate kit for adapting to the measuring machine.

01 | Rails
High-precision Renishaw rails with optical probe heads guarantee the best results.
Renishaw probe unit
For top quality and unmatched flexibility.

02 | Machine design
Specially cast aluminum for optimal dimensional and thermal stability.

03 | Natural granite
The high-precision workplate of black granite constitutes the base for all EROWA tooling systems that can be set up. Attachment boreholes have been prepared.

04 | Joystick control
Optimal operation for safe measurement. One joystick for all the axes.

Software
With the EROWA presetting software, presetting data can be collected very simply and with graphic support.

Tooling system operation
All the systems can be opened by means of simple levers.

Motorized axes
All the axes are driven by DC servo motors.

EROWA PreSet 3D MAN

Presetting, setting up and measuring

PreSet 3D MAN meets the highest demands. Thanks to its modular design, the system can be flexibly adapted and extended.
We assume system responsibility for the project, from commissioning through training to maintenance. Convenient and competent.



EROWA PreSet 3D MAN
• Measuring station (worktop with hole pattern for all EROWA tooling systems)
• Pneumatic control system
• PC and color printer (optional)
• Software for presetting
• Renishaw measuring probe (optional)
• Calibration sphere

For more information, please contact your EROWA dealer.

Technical data

	PreSet 3D MAN
X-axis travel	500 mm*
Y-axis travel	600 mm*
Z-axis travel	440 mm*
Maximum distance between table and probe holder (without probe)	585 mm
Maximum distance between the columns at table height	720 mm
Usable area of the granite slab (with EROWA hole pattern)	720 x 960 mm
Measuring uncertainty in the volume (as per ISO 10360/2)	3.2 µm + L/300
Machine dimensions	
Dimensions LxWxH	1044 x 1018 x 2411 mm
Maximum loadable workpiece weight	300 kg
Machine weight (without load)	390 kg
Further available sizes	
X-axis travel	650 mm
Y-axis travel	700 mm
Z-axis travel	500 mm

* Other movements available on request. Depending on the machine type, the values may diverge from the data indicated here.

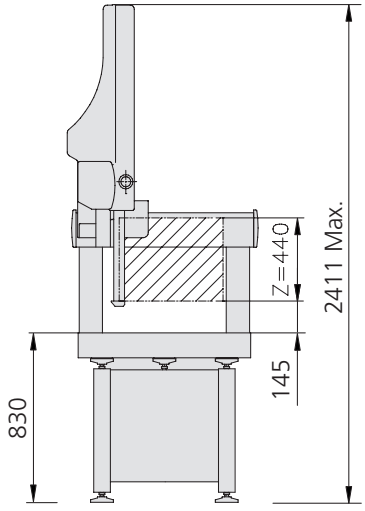

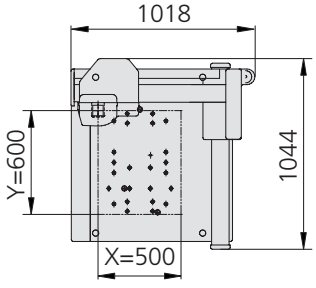

THE FACTS

- Animated presetting programs
- Integrated hole pattern for mounting the EROWA chucks
- Reliable workpiece identification with EWIS™
- Many post-processors for the converting measurement data into machine language are additionally available



Note:
For a variety of chucks we offer the appropriate kit for adapting to the measuring machine.

01 | Rails
High-precision Renishaw rails with optical probe heads guarantee the best results.
Renishaw probe unit
For top quality and unmatched flexibility.

02 | Machine design
Specially cast aluminum for optimal dimensional and thermal stability.

03 | Natural granite
The high-precision workplate of black granite constitutes the base for all EROWA tooling systems that can be set up. Attachment boreholes have been prepared.

Tooling system operation
All the systems can be opened by means of simple levers.

Software
With the EROWA presetting software, presetting data can be collected very simply and with graphic support.

EROWA PreSet 2D

Electrode preset made easy

The electrode presetting station for all applications. The sophisticated design was made for everyday use on the shop floor. Measurements in the X, Y, Z and C axes are performed quickly and reliably. Data output of the measured values is integrated. The presetting station can be equipped with different tooling systems.



EROWA PreSet 2D - table-top version

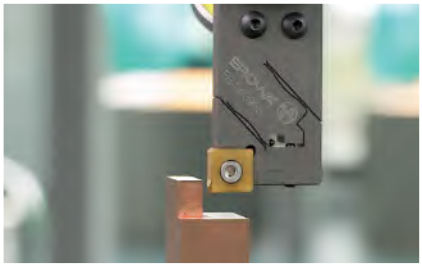

Simply ingenious: The 2D edge probe (EROWA patent) allows you to determine the desired values on radii, edges, corners and sloping surfaces.



The convenient user interface on the EROWA Modus shows you step by step how to find the offsets.

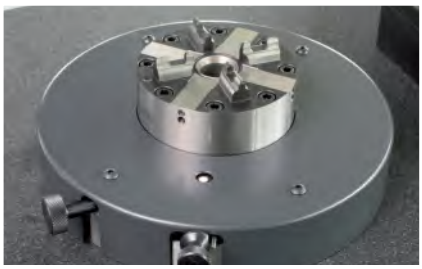

Always correct: The air bearing simulates the C-axis on the EDM machine. The high-precision concentricity identifies even the most minute deviations on the electrodes.

EROWA PreSet 2D

- Measuring plate with carriage or table-top version
- Table-mounted chuck
- Digital display with GAGE-CHEK 2000
- Two-axis measuring unit
- EROWA 2D edge probe
- Cleaning agent for granite slab

For more information, please contact your EROWA dealer.

Product order numbers for EROWA PreSet 2D

without C-axis	with carriage	Table-top version
PreSet 2D UnoSet	ER-057208	ER-158556
PreSet 2D PalletSet W	ER-057209	ER-158557
PreSet 2D UPC / ITS Chuck 100 P	ER-057210	ER-158558
PreSet 2D ITS Compact Combi	ER-057211	ER-158561
PreSet 2D ProductionChuck 210	ER-057212	ER-158559

with C-axis	with carriage	Table-top version
PreSet 2D+C ITS Chuck 100	ER-057213	ER-158560
PreSet 2D+C ITS Compact Combi	ER-057214	ER-147394

EROWA PreSet 2D - Mobile version

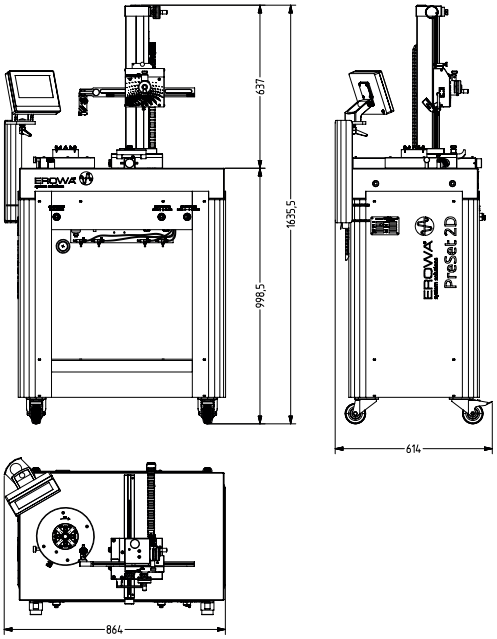

Technical data	
	PreSet 2D
X-axis travel	240 mm
Y-axis travel	320 mm
Z-axis travel	335 mm
Evaluation unit	Heidenhain GAGE - CHEK 2000 with EROWA preset macros
Interface	USB/Ethernet for data transfer to QuickLinkXT/JMS 4.0
Probe system	EROWA 2D edge probe / switching button / microscope
Space required	700 x 1000 mm
Compressed air supply	min. 6 bar dry

EROWA PreSet 2D - Table-top version

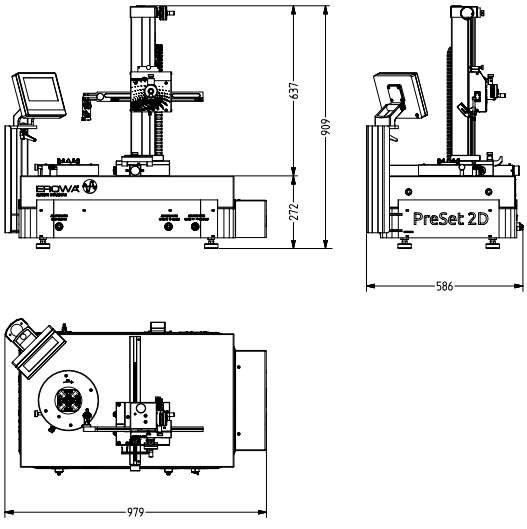



Space-saving I The PreSet 2D table-top version positions the measuring device exactly where it is needed, making optimum use of the working area.

EROWA PreSet 2D

Options and accessories



EROWA 2D edge prob ER-057471
Precise probing of sharp edges, angles, diameters and lengths.



Tactile probe kit ER-165469
For fast and user-friendly recording of offset and measured values.
The switching function of the probe eliminates the need for zeroing as with the previous dial gauge. The measuring point is automatically recorded as soon as the probe is released on the component.

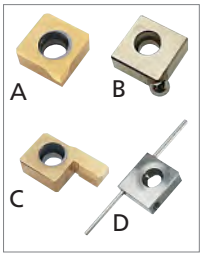

Probe insert A ER-008623
B ER-008562
C ER-008831
D ER-008628
for 2D edge probe.



Mini PC incl. monitor ER-147724
Integrated solution for direct data transfer to the control system or image transfer from camera systems.

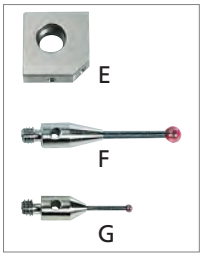

3xM2 probe insert E ER-009899
ø 2 mm F ER-003350
ø 1 mm G ER-003358
for 2D edge probe.



Microscope ER-008756
To view profiles, indentations and boreholes, with a magnifying factor of 30.



Lever gauge ER-059439
Analog gauge with a diameter of 38 mm and a resolution of 0,002 mm.



Cold light ER-095529
for the microscope: for optimal light on the area to be magnified.



Taper adapter ISO 30 ER-008852
Taper adapter ISO 40 ER-008854
For presetting cutting tools with the corresponding taper holders.



Camera system ER-158911
For transferring the captured views of the microscope to the mini PC monitor.



QuickLink^{XT}
For data entry and processing in machine-specific formats. QuickLinkXT is a simple program for transferring data from the EROWA PreSet 2D presetting station to a machine control.


HEIDENHAIN
Mahr
MarTest 805M
EROWA
ER-035210
EROWA

EROWA PreSet Basic

Setup and alignment

PreSet Basic is the ideal setting and presetting station for a quick check of the Z-plane or to align workpieces in the Y-axis.
Its stable trolley enables you to place it wherever it makes most sense in terms of work.

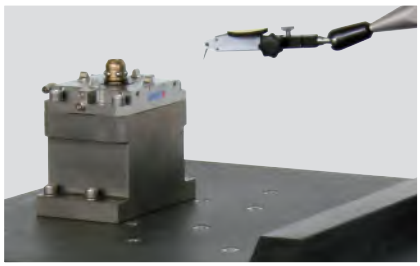

Choice of clamping system (PalletSet W shown). The presetting station has a modular design. Select the clamping system as required.



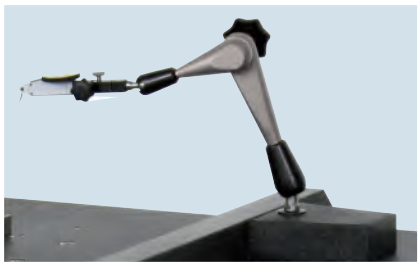

Using the dial indicator on a flexible base, align workpieces in the Z-plane or the Y-axis along the stop guide rail.



Measuring slab made of top quality natural stone according to DIN 876/00. Delivered with certificate and measurement record.

Technical data

PreSet Basic	UPC	PalletSet W	UnoSet
Operational weight (kg)	230	220	230
Max. load (kg)	100	25	10
Gauge gradation (mm)	0.002	0.002	0.002
Probe system	Analog dial gauge on flexible stand		
Space requirements (mm)	800 x 500 x 1000		



ER-057206 PreSet Basic UPC

Version	Presetting station with trolley, measuring top, UPC chuck and probe.
Load	100 kg.
Application	Setting and aligning of workpieces on UPC pallets.



ER-057205 PreSet Basic PalletSet W

Version	Presetting station with trolley, measuring top,PSW chuck and probe.
Load	25 kg.
Application	Setting and aligning of workpieces on PalletSet W holders.



ER-057204 PreSet Basic UnoSet

Version	Presetting station with trolley, measuring top, UnoSet chuck and probe.
Load	10 kg.
Application	Setting and aligning of workpieces on UnoSet holders.

Tailored to you:
Whether as a standard solution or with a custom configuration, the PreSet set-up and presetting station can be individually adapted to your requirements. Please contact us for a consultation.





EROWA CMM Qi / PreSet 3D

Basic equipment

Measuring stations are equipped with EROWA tooling systems according to requirements. Some of these tooling systems can be mounted on one and the same table in combination.



	Adapter Kit
Version	All components for adapting a pneumatically operated EROWA standard chuck to the measuring machine.
Application	Adaptation of EROWA chuck type: MTS, UPC 2.0, UPC 2.0 with ITS Chuck, PC 210, PowerChuck P, ITS Chuck 100 P, ITS Compact Combi, VPC.
Note	Detailed data on the chucks can be found in this catalog in the respective product descriptions in the «EROWA tooling systems» section. Or contact your EROWA dealer.



ER-046080	**FrameSet Base 3D CNC**
Version	Flat chuck on carrier plate for PreSet 3D CNC (not suitable for PreSet 3D MAN).
Fastening	With mounting accessories directly in prepared hole pattern.
Application	For accommodating FrameSet clamping frames.
Combination	FrameSet can be combined with one of the following systems: UPC, PowerChuck P, ITS Compact CombiChuck, MTS Single Chuck.

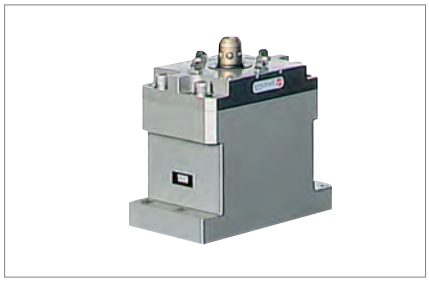

ER-022683	**PalletSet W Base 3D**
Version	Flat chuck on support for CMM Qi/PreSet 3D.
Fastening	Directly in prepared hole pattern.
Application	For accommodating all PalletSet W holders.
Combination	PalletSet W can be combined with one of the following systems: UPC, PowerChuck P, ITS Compact CombiChuck, MTS Single Chuck, PC 210.



ER-012580	**UnoSet Kit Support 3D**
Version	Chuck 50 RSA with support for CMM Qi/PreSet 3D.
Fastening	Directly in prepared hole pattern.
Application	For accommodating all UnoSet holders as well as ITS holder 50, C and ø 72.
Combination	UnoSet can be combined with one of the following systems: UPC, PowerChuck P, ITS Compact CombiChuck, MTS Single Chuck, PC 210.

EROWA PreSet

Measuring tools

Different useful components make it easy and convenient to have everything under control. For questions on measuring devices and options for EROWA measuring stations, please contact your EROWA agent.

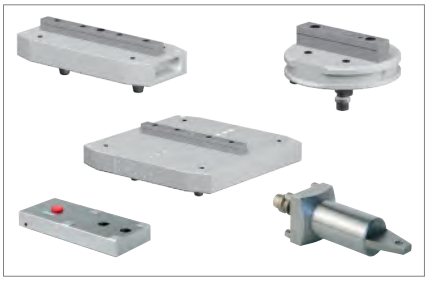

	Alignment pallets / control pins
Application	Measuring equipment for aligning and checking EROWA chuck types: MTS, UPC 2.0, UPC 2.0 with ITS Chuck, PC 210, Power-Chuck P, ITS Chuck 100 P, ITS Compact Combi, PalletSet W.
Note	Detailed data on the measuring equipment can be found in this catalog in the respective product descriptions in the "EROWA tooling systems" section (from page 13). Or please contact your EROWA dealer.



ER-007796	**Zero master**
Application	For checking the Z=0 level on the PreSet Basic WEDM presetting stations.

EROWA Measuring software

As diverse as the tasks

EROWA's measurement software solutions open up new possibilities for you in quality assurance and reverse engineering. Thanks to our strong partnership with renowned measuring software manufacturers, we can offer you the right software solution for your needs. Whether simple intermediate inspections, presetting of tools and components or demanding measurements on complex components up to reverse engineering, everything is possible.

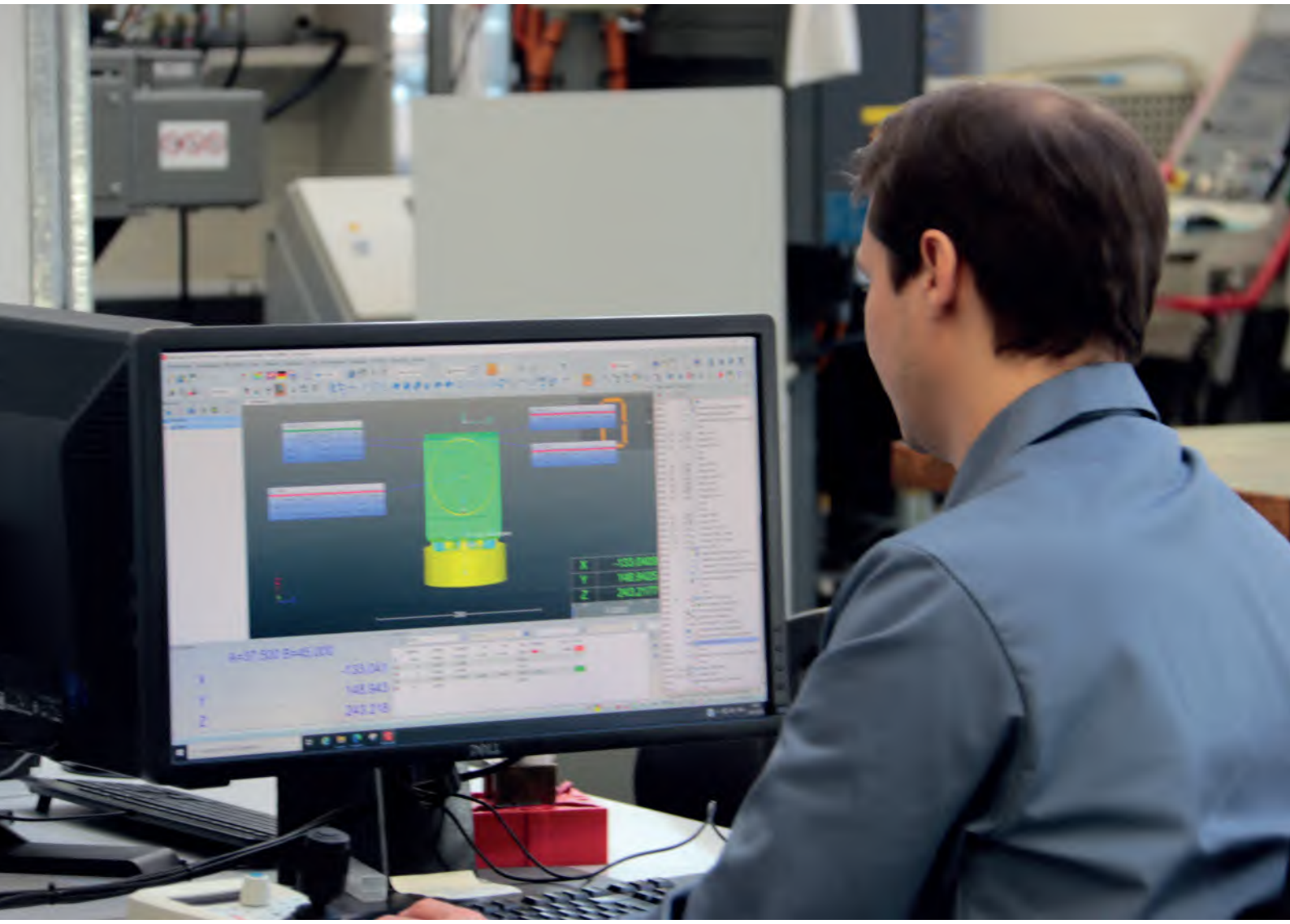



Simply preset and measure
The software applications PreSet Configurator and PreSoft developed by EROWA contain over 100 different macros for presetting and simple measurement of tools and components. Thanks to the detailed graphical user guidance, it is possible for every user to carry out simple measuring and presetting work. Knowledge of 3D measurement technology is not necessary.

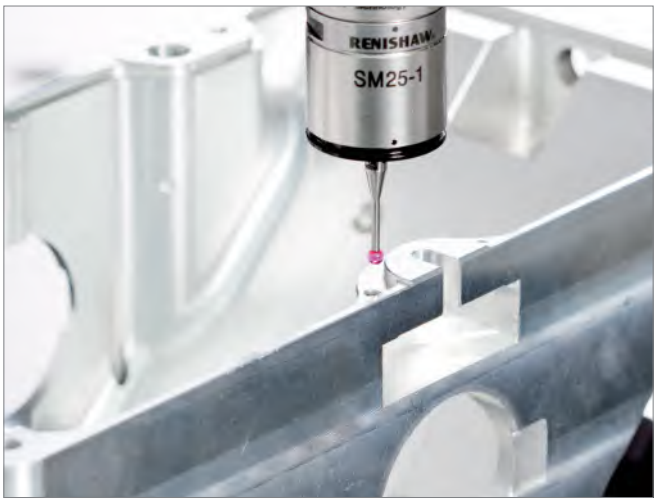

Quality measurement for every requirement
The two measuring software solutions MetrologX4 and Arco-CAD offer you the possibility to measure from simple control measurements up to highly complex geometry evaluations in the µ-range. The software options can be optimally adapted to the customer's needs and thus the best solution at the best price can be selected for the respective requirements.



Reverse engineering and inline controls at the highest level
EROWA CMM CubeScan and **EROWA QMeasure** will revolutionise your in-process measurements. With **EROWA CMM CubeScan**, several thousand measurement points of complex free-form surfaces can be captured within a very short time with the help of a laser scanner, and this without writing a measurement programme. Thanks to the automated programme generation, you only need to provide the component dimensions and the CAD model. CMM CubeScan does the rest. With **EROWA QMeasure** you have the possibility to create tactile measurement programs in your familiar CAD environment. QMeasure is ideally suited for components with regular geometries and few measuring points.

EROWA Measuring software

Presetting made easy

Create more capacities: In future, carry out presetting work and simple control measurements on your measuring machine without blocking your processing machine or having to wait for the control in the measuring room. With EROWA's software solutions, you get powerful tools that enable every user to carry out these activities independently and in a user-friendly manner.

EROWA PreSet-Software
Simple presetting and measuring

Presetting provides more productive time on the processing machines. The EROWA presetting software meets this demand. Thanks to the PreSet software from EROWA, you can realise setup and presetting in parallel with machining time and thus gain up to 600 productive hours per year. The complex measuring technology is packaged under a simple user interface. Thanks to the visual operator support, a short introduction is sufficient and every operator can efficiently preset and measure electrodes and workpieces, even without knowledge of 3D measuring technology.

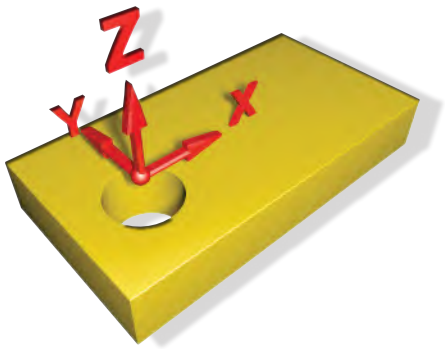

FACTS

- Simple and logical operation
- Operator guidance with animated graphics
- Integrated in the EROWA process control system JMS 4.0
- Program suitable macros and measuring programs yourself
- Innovative software solution with focus on metrological challenges of the future
- Knowledge of 3D measurements not necessary

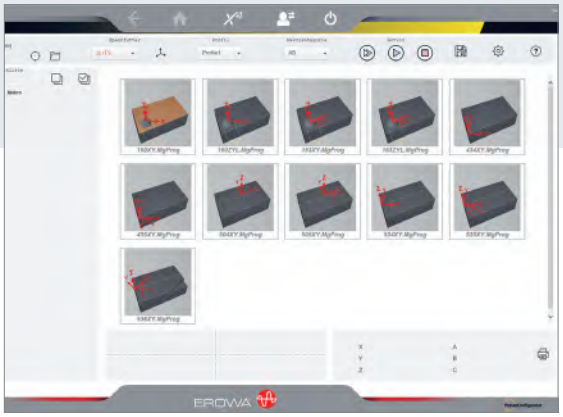

01 | The clear display and graphical user guidance allow every user to set up the system correctly within a short time. The processes can be learned intuitively. Knowledge of 3D measurements is not necessary.

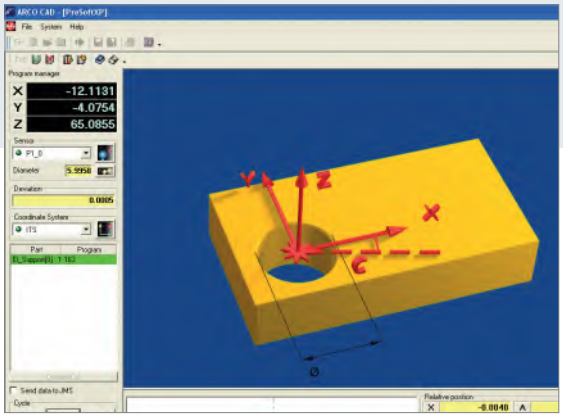

02 | The animated graphics during the measurement support the operator in executing the macros.

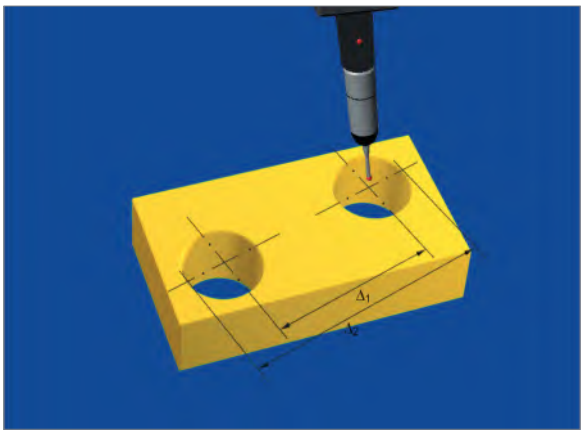

03 | Quick intermediate checks of diameters, distances or angles, for example, can be easily carried out thanks to the predefined measuring macros.

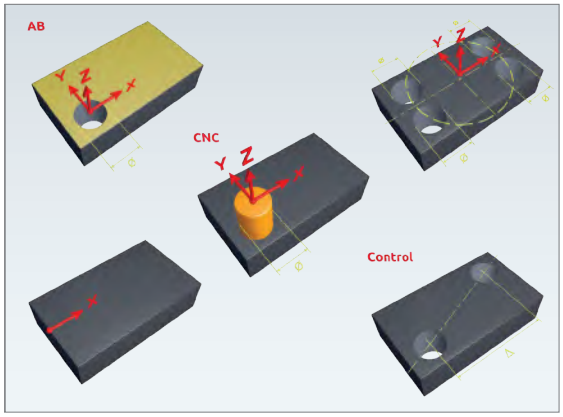

04 | Create your own macros for fast and safe measurements. In addition, over 100 frequently used measurement sequences are already predefined as macros and can be selected as required.

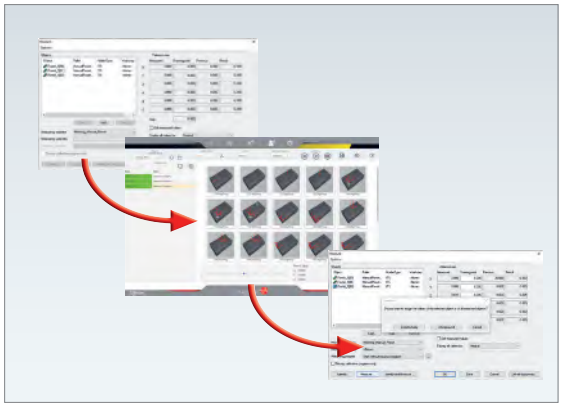

05 | EROWA PreSet Configurator and EROWA PreSoft are integrated into the JMS 4.0 process control system. The presetting functions are called up with one click. The determined offset data is automatically transferred to the system.

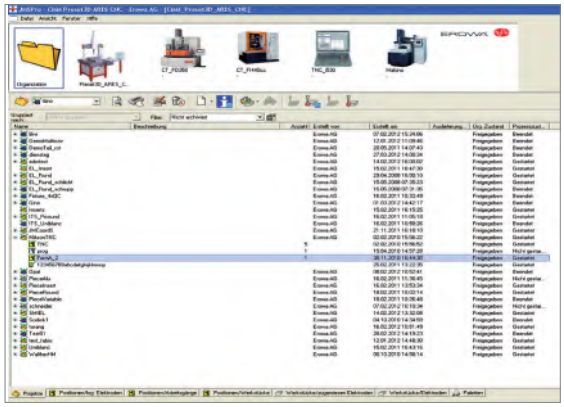

06 | The automatic assignment of the offset values to the ID numbers of the electrodes or workpieces results in a high level of process reliability.

EROWA Measuring software

Measuring software for every demand

With the extensive range of measurement software solutions from EROWA, no wishes remain unfulfilled. The software options can be optimally adapted to the customer's needs. This means that the best solution can be selected for the respective requirements at the best price.

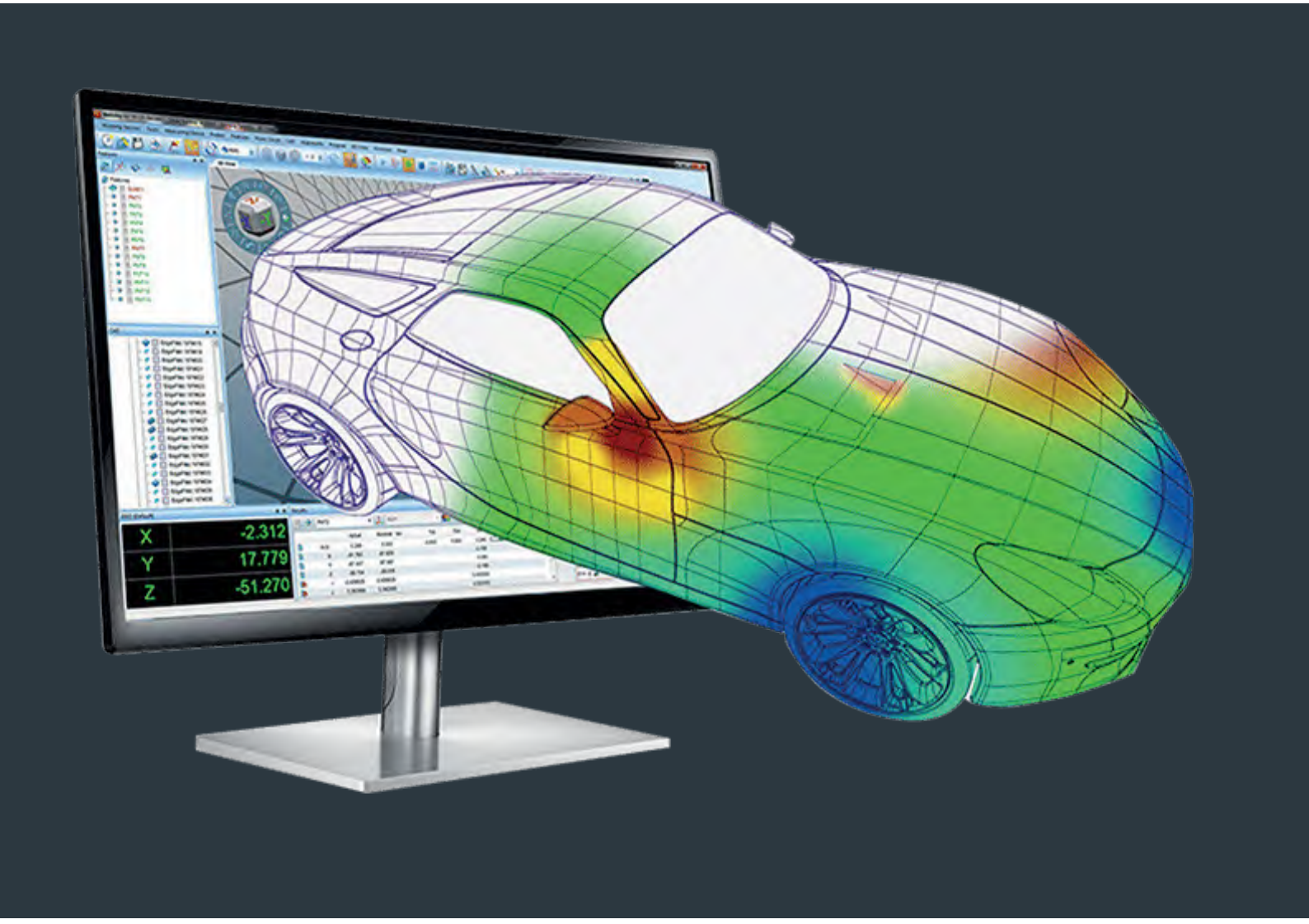

FACTS

- Full-fledged software for quality control
- Data import: Catia, UG, Pro Eng, Solid Works, VDA, STEP
- Define measuring points directly in the CAD file with “Teach-and-Learn“

ARCO-CAD Measuring-Software Import - Measure - Compare - Log

ARCO-CAD is a cost-effective measurement software for entry-level measurement technology or for simpler measurement applications. It contains all the functions for importing CAD models and using them to create measuring programmes or also to measure directly against CAD nominal values. This makes real quality measurements with full-fledged protocol management possible after appropriate training.

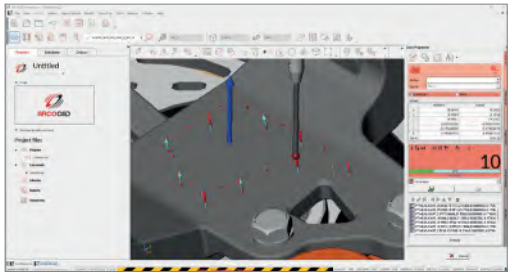

The operator guidance with animated symbols is based on ARCO-CAD. All operators move intuitively and safely in this programme with the pictorial representation of the measuring tasks.

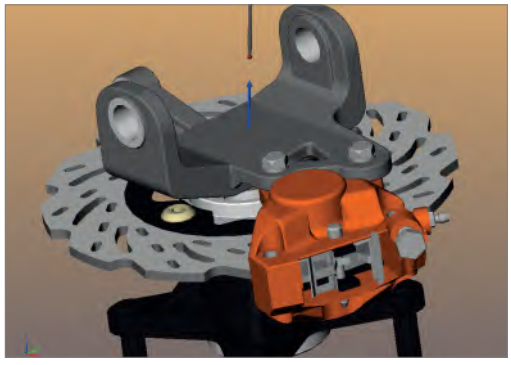

ARCO-CAD allows the integration of CAD data. Based on the imported data, the areas to be measured are selected and calculated. This function is especially suitable for measuring complex 3D shapes.

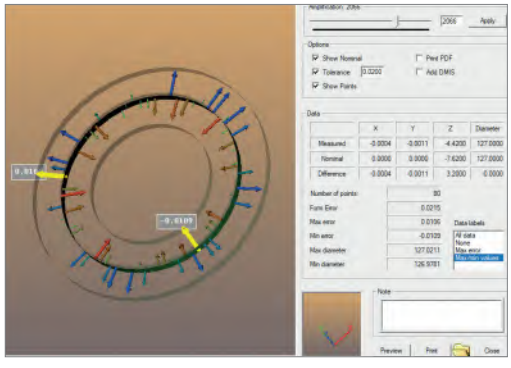

With the help of the ARCO-CAD reporter, individual and complex reports can be easily generated.
Whether using CAD, images or tables, all measured elements can be output graphically. Individual templates facilitate the creation of reports.

EROWA Measuring-Software

Measuring software for the highest demands

Metrolog X4 Mess-Software
High-end software for the highest demands

The Metrolog X4 3D-Measuring-Software offers advanced technology and know-how for even faster and more efficient measurements. Rely on an optimal user interface for outstanding ease of use, as well as high performance even with large amounts of data.

FACTS

- Optimal user interface for outstanding ease of use
- Efficiency increase through highest flexibility and functionality
- Unsurpassed compatibility with tactile and optical measurement systems
- High performance even with large data volumes
- Large selection of different languages directly selectable

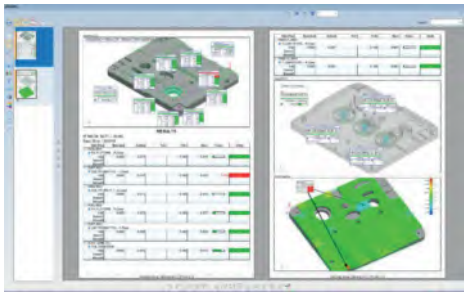

Clear report presentation. Whether tabular, graphical or color mapping. With X4, you can design your measurement reports according to your needs and receive a clear and informative measurement report.

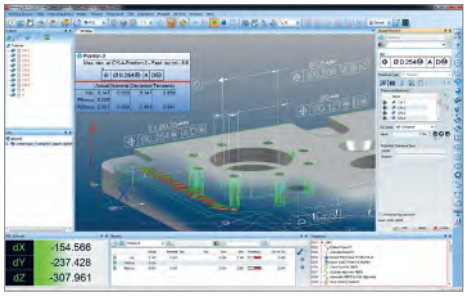

Easy handling of form and position tolerances of the most complex kind in record time. Facilitated definition of form and position tolerances. The software offers comprehensive support for tolerance evaluation in accordance with the applicable standard (ANSI and ISO).



Easy-to-use graphical user interface, fully customisable to the operator's needs, according to the respective machine types and measurement types. Wizard for manual measurements. Automatic adjustment of the view during point acquisition. Customisable information windows.

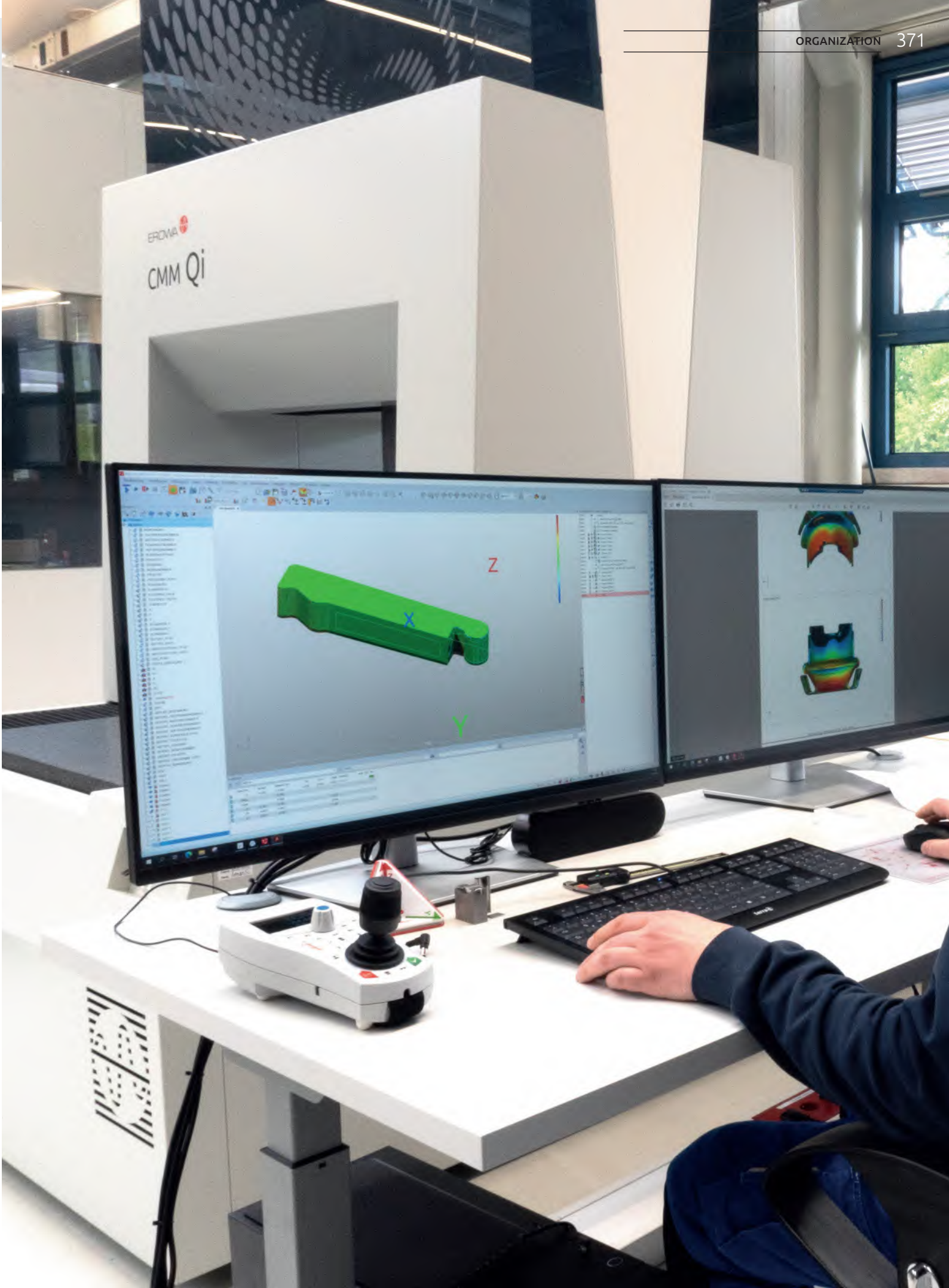
ERONA
CMM Qi
Z
X
Y

EROWA Measuring-Software

In-process control and reverse engineering at the highest level

With the extensive range of measurement software solutions from EROWA, no wishes remain unfulfilled. The software options can be optimally matched to the customer's needs. Thus, the best solution at the best price can be selected for the respective requirements.

EROWA Q-Measure Software
Quality fairs directly from the CAD system

You determine the important properties for quality measurement quickly and easily in your familiar CAD system. With EROWA Q-Measure you define the measuring points and tolerances. The electrode is identified on the measuring machine, the programme is automatically created and the measurement is started.

FACTS

- Interactive definition of measuring points and tolerances
- Automatic electrode identification
- Automatic generation of measuring programmes
- Release or blocking according to measurement result
- Documentation with 3D measurement report

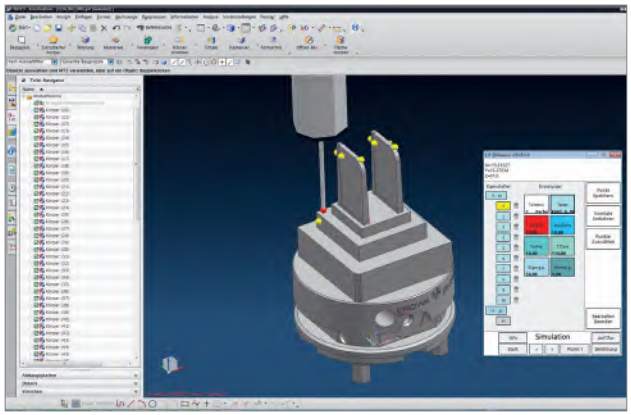

Planning
Workpiece and electrode design. Interactive definition of measuring points and tolerances directly in your familiar CAD system.



Data transfer
Full integration into the JMS 4.0 ML process control system, ensuring the simplest possible data transfer and user-friendly data handling.



Quality measuring / PreSetting
After defining measuring points in the planning step, the measuring programme is automatically generated & transferred to measuring machine. As soon as the piece has been identified, the presetting/measuring process is carried out automatically.



Report
Interactive 3D measurement reports for easy data evaluation are automatically created by the software and assigned to the corresponding measured part. This ensures guaranteed traceability.

FACTS

- Fast data analysis
- No programming effort
- Full process control
- Cost-effective application
- Digitise component quickly and easily
- Easy handling
- Fully automatable even for single parts and small series

EROWA CMM CubeScan Technology
Fast, simple and cost-effective quality control

With the help of a laser scanner, workpieces can be measured without contact within a very short time using the EROWA CubeScan Software. And this without having to create an additional measuring programme. The result is fed directly back into the control system. Faulty workpieces are automatically blocked.

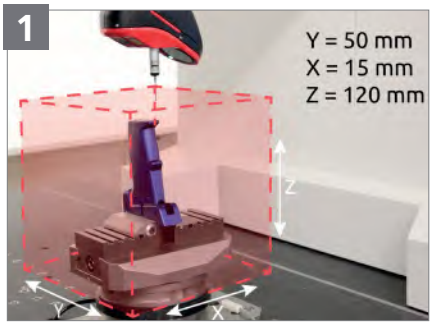

01 | Determine workpiece dimensions in X-Y-Z dimension.



02 | Import order and workpiece data into JMS 4.0.

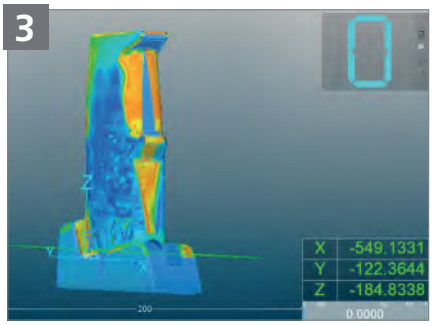

03 | The measuring programme is automatically generated in JMS 4.0 and sent to the measuring machine.



04 | The measurement is carried out automatically and the measurement data is compared with the target in a report.



05 | The result „within tolerance“ or „incorrect workpiece“ is automatically stored in the process control system.



Reverse Engineering
Digitise components quickly and easily

The reverse engineering function of the Cube Scan software is just as easy to use as the in-process controls. Simply enter the component mass manually or automatically via a parameter file. Then your component can be digitised to create a 3D model. Here, too, the measuring programme is automatically generated in the control system.

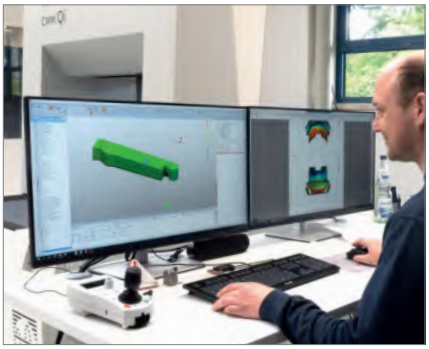

EROWA QuickLink^{XT}

Simple data transfer

QuickLinkXT is a simple program for the data transfer from the EROWA PreSet 2D presetting station to a machine control unit. Set up a PC, insert a USB data carrier (USB stick), install the software, plug in the connecting cable between PC and display, and the hassle-free data transfer to the machine or the programming station is ready.

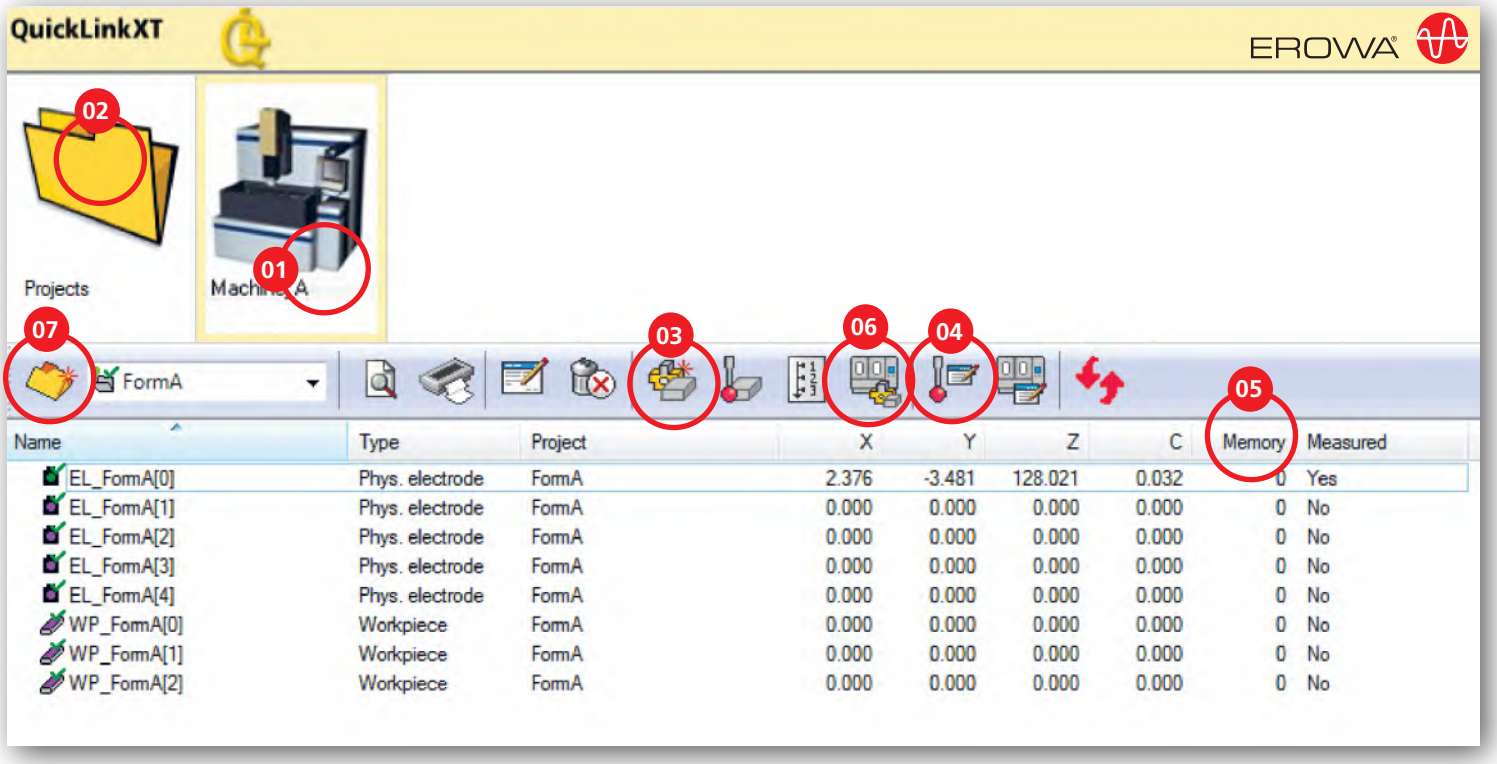

Presetting data of electrodes and workpieces are transferred to the machine with ease and speed. The X-, Y-, Z- and C-values are determined on the PreSet 2D presetting station and transmitted to QuickLinkXT at the push of a button.

All the data of one job are converted into the specific machine format.

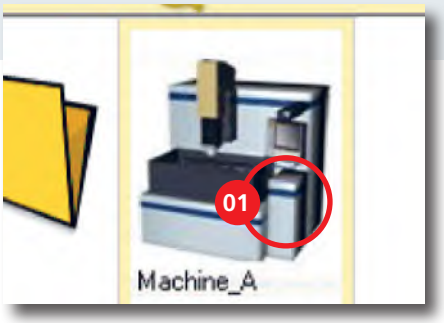

1 I Active project
The content of the active project is displayed in the machine view. From here, this can be created, modified and output directly.

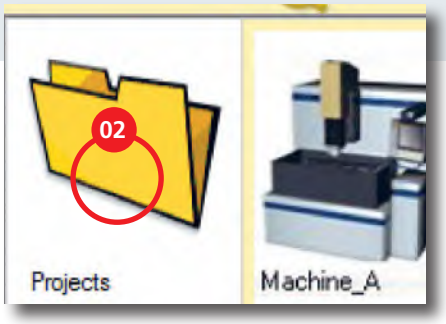

2 I Stored projects
The projects are stored to document the working steps. This information can be called up and printed out at any time.

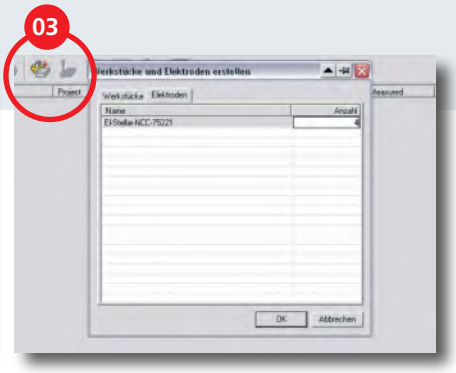

3 I Number of electrodes and workpieces
At the beginning, the number of electrodes or workpieces to be measured is defined. This will guarantee an overview of the working progress.

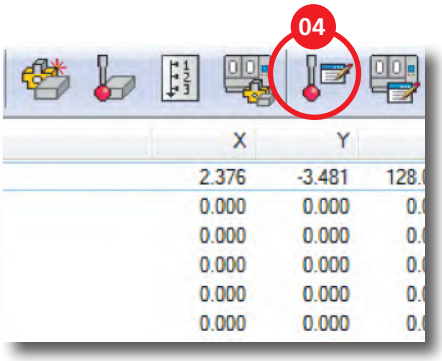

4 I Receive measured data
QuickLink^{XT} is ready to take over the data from the presetting station. The transmission command is triggered in the control unit of the presetting station.

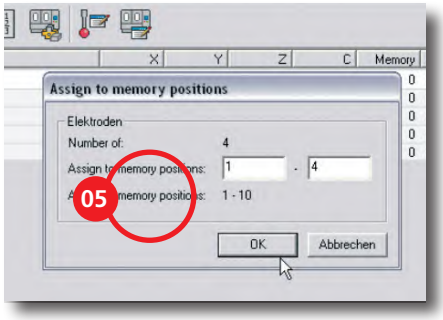

5 I Allocate memory space
The memory positions are defined at once in order to avoid any confusion during the transfer to the machine control unit.

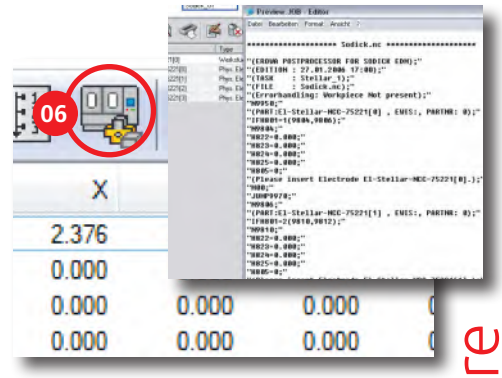

6 I Data export
All the selected measured data are converted into the specific machine format at the push of a button. They can be stored on a diskette or in a network directory.
Before the export, you can check whether the result comes up to expectations.

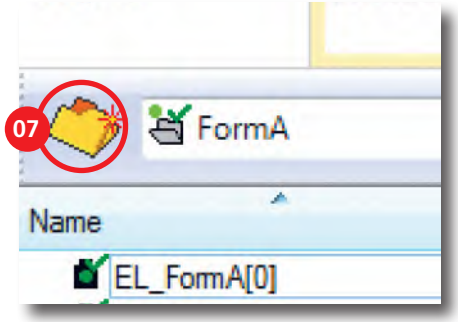

7 I New project
Every new job is given a designation. In this way, it can easily be found again. Even at this early stage, the job has been allocated to a machine.

FACTS

- Easy and quick program
- Transfers data automatically into machine specific format

Organization with EROWA JMS 4.0

Simple presetting and measuring

In combination with the EROWA JMS 4.0 process control systems, EROWA›s measuring and presetting stations can be integrated into the production process in a variety of extension stages.

From simple presetting to in-process checks and fully automated production quality monitoring, EROWAs measuring and presetting stations accompany your productions from the perspective of quality assurance, thus making an essential contribution to the minimization of reject rates and quality assurance by means of process control.

Thanks to the modular principle, extensions can be carried out in small, manageable steps. In this way, your production is prepared for the challenges of the future in the best possible manner.

FACTS

- Simple introduction of the EROWA Job Management System 4.0
- Software modules to meet any requirement
- PreSet software included
- Contains more than 100 presetting programs
- Quick changeover from presetting software to measuring software at the touch of a button
- Automated quality checks

JMS® 4.0
EROWA Productivity Suite

The EROWA JMS 4.0 process control system combines all data and controls the entire production process.

more information:
Weblink - Process control system JMS 4.0

EROWA Loading systems

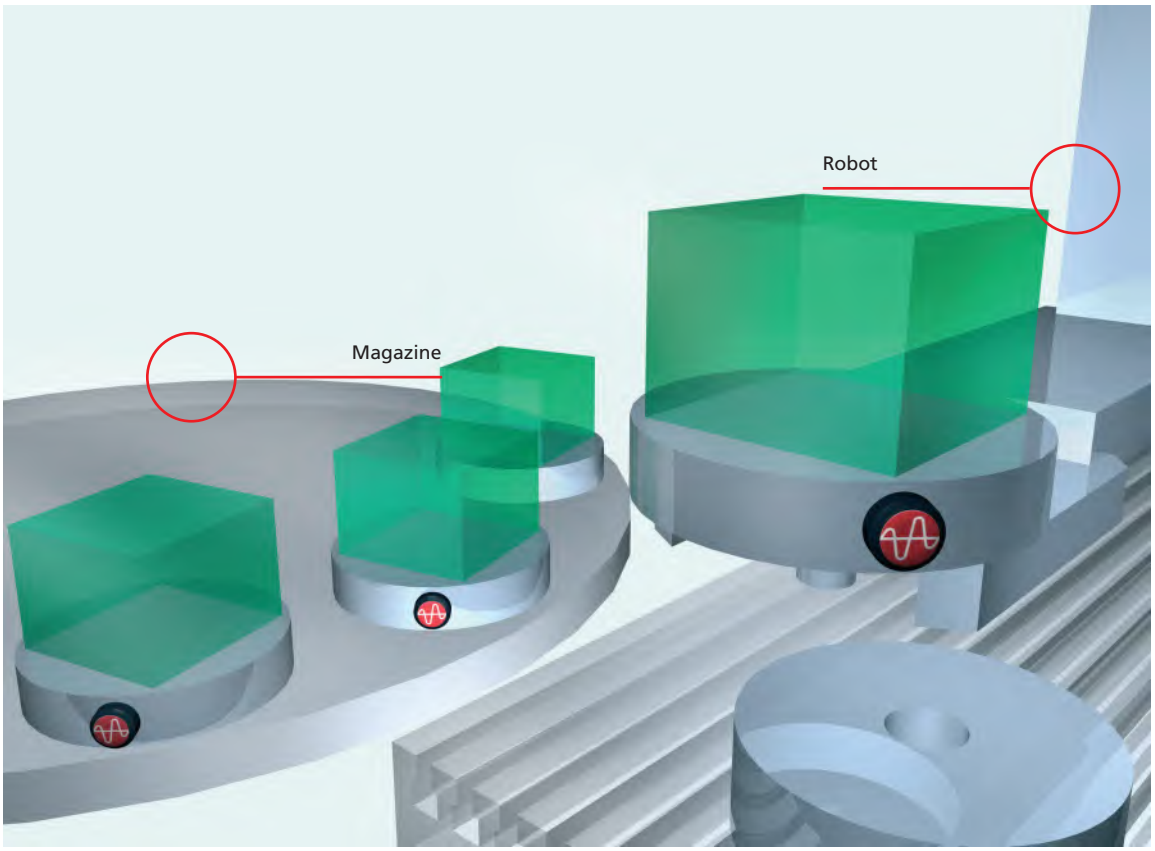

EROWA Automatic loading

Automation of machine tools. This relieves personnel of monotonous work, while at the same time creating a multiple capacity for the output of parts and for preparation. It also provides more space for your personnel's creativity.

For chip-removing processes

For EDM sinking

For WEDM

EROWA LOADING SYSTEMS



up to 120 kg



up to 250 kg

EROWA Robot Easy 382
EROWA Robot Leonardo High 386



up to 80 kg



up to 150 kg

EROWA Robot Compact 80 390
EROWA Robot Compact 150 394



up to 150 kg



up to 250 kg



up to 500 kg

EROWA Dynamic 150 / 250 / 500 398



up to 800 kg

EROWA Robot Six 410

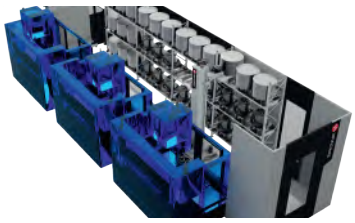

up to 3000 kg



up to 5000 kg

LoadMaster Compact 414
LoadMaster Compact Heavy 414



up to 250 kg

EROWA Lift 418



up to 250 kg

EROWA LiftGear 420

EROWA Automation

EROWA robots are available for every machining technology and in a great number of configurable variants. We provide simple devices for retrofitting to existing machines, as well as state-of-the-art linear automation which serves several machines through one single robot.

	Monoblock			
	ERC 80	**ERC 150**	**ERL High**	**ERE**
				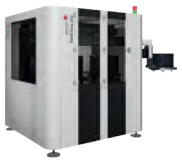
Transfer weight (kg) of pallet, including work-piece	80	150	120	250
Maximum obstacle con-tour, workpiece, l×w×h (mm)	320 x 320 x 300 UPC	400 x 400 x 400 MTS 400	480 x 480 x 400 MTS 500	510 x 510 x 390* MTS 500
Automatic gripper change	yes	yes	yes	no
Minimum base surface, robot (mm); maximum height, robot (mm)	1,065 x 2,010 2,630	1,700 x 2,772 2,655	1,910 x 1,822 4,868	1,700 x 1,700 2,200
Maximum numbers of machines	2	2	2	1

*Standard data (extended specification possible on request)



Standalone & linear			Linear		
ERD 250	**ERD 500**	**ER Six**	**ERD 150**	**LMC**	**LMC Heavy**
				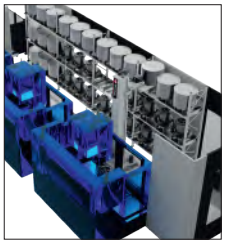	
250	500	30 - 800	150	800* - 3,000	3,000 - 5,000
800 x 800 x 500 MTS 600 x 800	800 x 800 x 500 MTS 600 x 800	Customized	400 x 400 x 400	ø1,400 x 1,250*	ø1,400 x 1,250*
yes	yes	yes	ja	nein	nein
2,600 x 3,700	2,600 x 3,700	Customized	2,750 x 3,400	6,200 x 3,200	6,200 x 3,200
3,450	3,450		2,610	5,000	5,200
12	12	12*	12	12*	12*

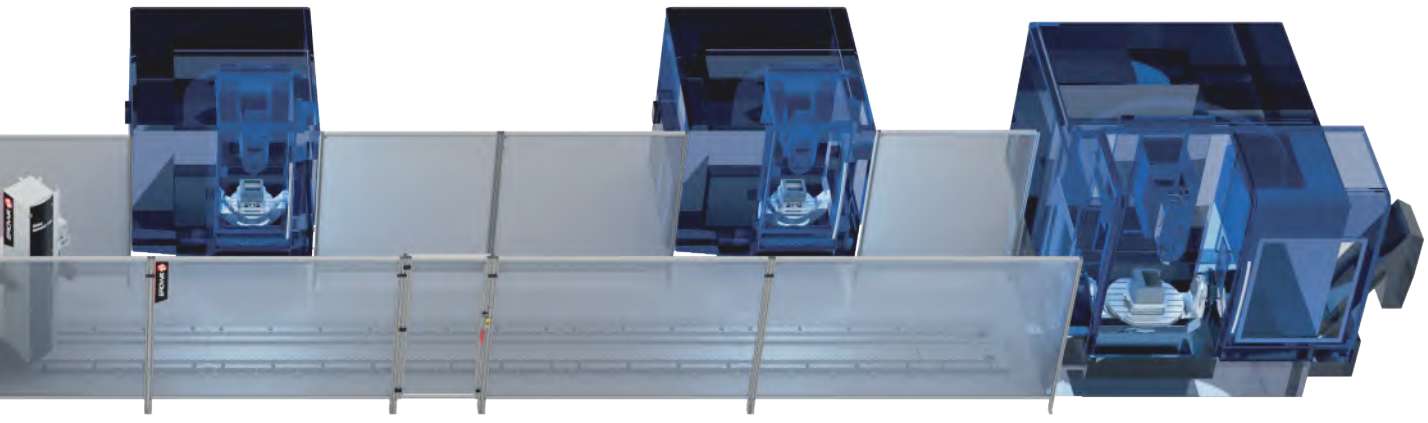

EROWA Robot Easy

Simply efficient

Effective automation starts very simply. From installation through possible retrofitting to an existing machine to operation. Amortization within one year is a reality.

more information:
Weblink - Robot Easy

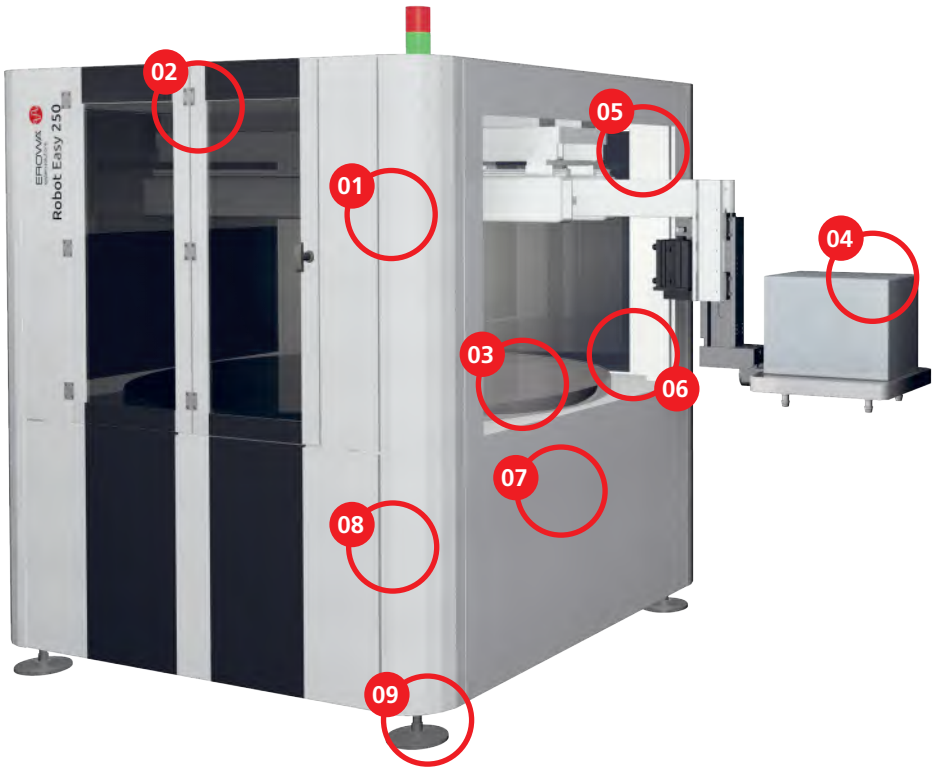

01 | State-of-the-art operator guidance with a logical structure.

02 | Easy magazine loading accessible for crane loading.

03 | Up to 60 magazine positions on one level.

04 | Max. 300 kg transfer weight.

05 | Intervention depth ~1,600 mm.

06 | for large/overloaded pallets also with drip pans and controlled drainage.

07 | Integrated control system.

08 | Service-friendly casing.

09 | Integrated height adjustment.



Long reach and high load capacity.



Convenient opening for magazine loading with an overhead crane.



Secure pallet recognition via RFID chip technology.

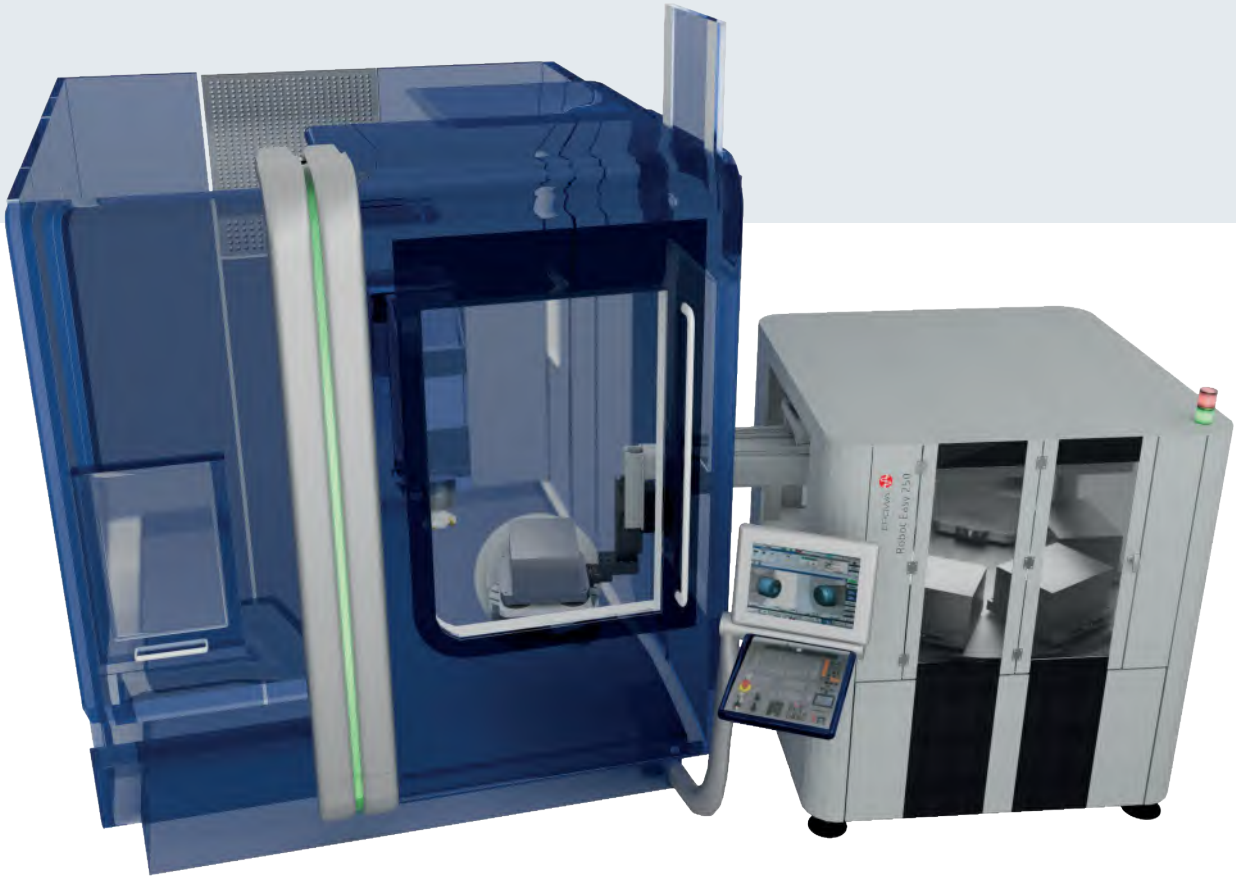

Specification based on maximum possible magazine positions per level.

WEDM

7 x frames PSW

15 x holders



Milling / EDM

12 x PC 210



Milling / EDM

10 x UPC



EDM / Milling

60 x ITS 50

60 Holder 72



EDM / Milling

24 x ITS 115/148



Milling

6 x MTS 400



Milling

4 x MTS 500



Technical data

EROWA Robot Easy	
Transfer weight	**250 kg (optionally 300 kg)**
Reach in machine	1,600 mm (optionally 2,400 mm)
Magazine capacity	4-60 positions depending on tooling
Voltage (V+PE)	3x400
Interface	Ethernet
Workpiece identification	EWIS™ Rapid
Process control system	JMS 4.0

FACTS

- Transfer weight 250 kg (300 kg)
- Workpiece size up to 500 x 500 x 400 mm
- For milling, drilling, grinding machines
- Easy control with JMS 4.0
- Automatic pallet detection
- Perfect for retrofitting

EROWA Robot Easy

Productivity increase of existing machines

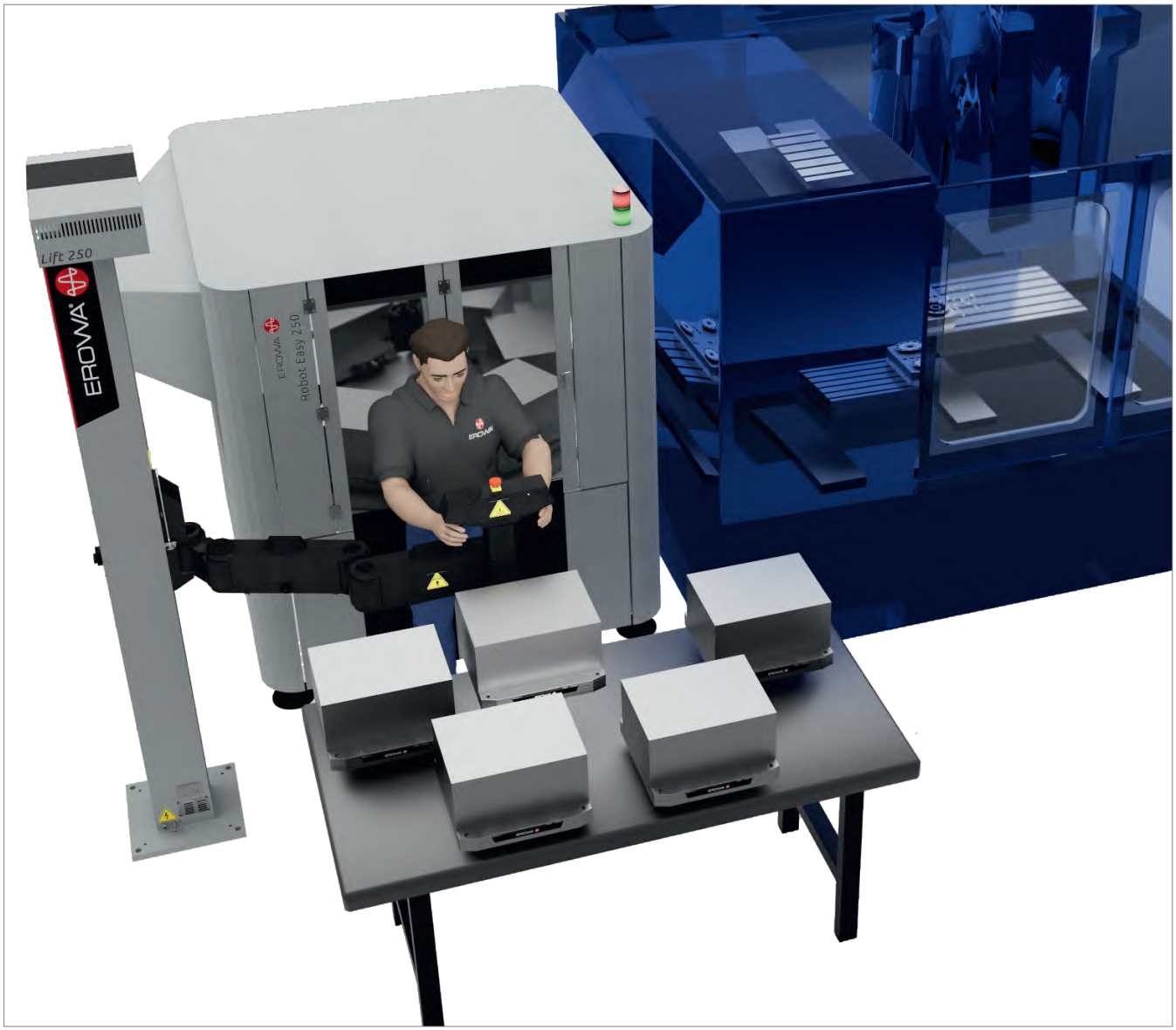

Retrofitting an existing machine with a Robot Easy brings amazing results.

Realize 4,000 productive hours per year per machine. That is, of course, in single-shift operation.

By cleverly setting up the work environment and properly adapting the processes.

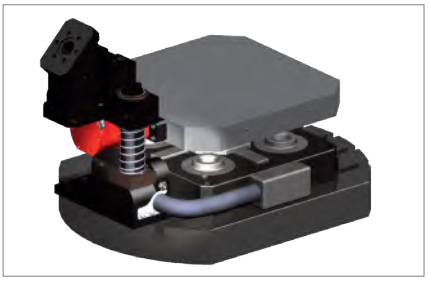

No compressed air at the machine table? Air Dock – this option solves the task.



No automatic door at the machine? RoboDoor – immediately retrofitted during robot installation.



more information: Weblink

The maintenance agreement. Order right away when you buy.



The EROWA JMS 4.0 process control system strongly supports the operator for optimal work planning.

State-of-the-art web technology combined with proven data management shows the status and predicts utilization.

EROWA Robot Leonardo High

Uncompromisingly productive

The autonomous system has many advantages. Up to 32 pallet positions for UPC 320 are available on only a 2x2 meters floor space. Pallets do not leave the system because setups take place on the integrated loading station.

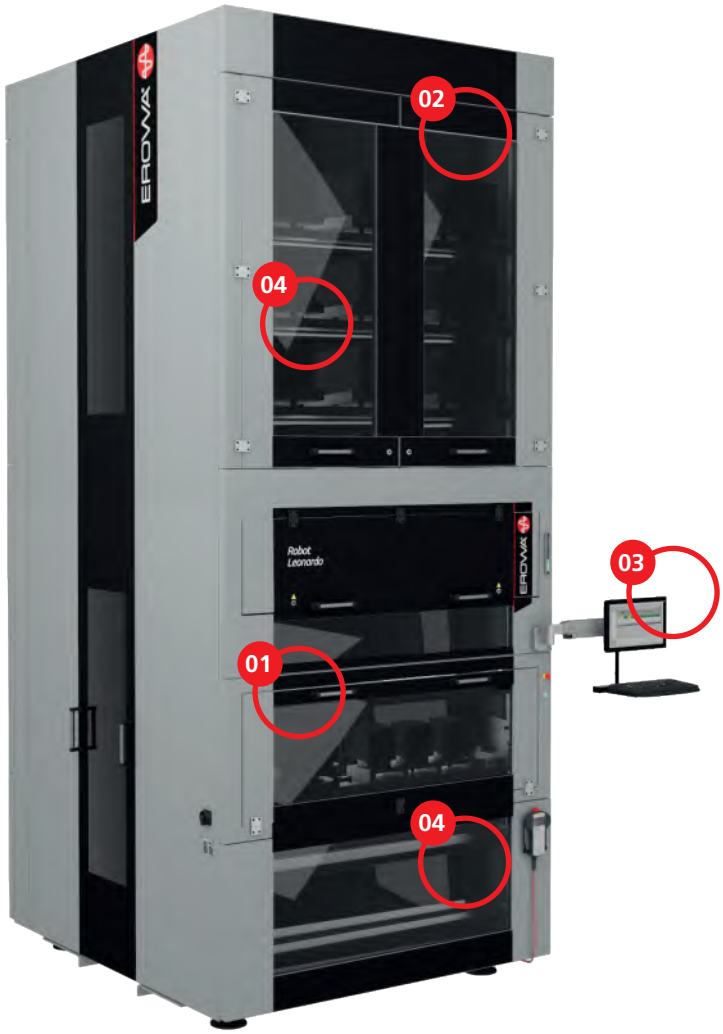

more information:
Weblink - Robot Leonardo

01 | Integrated loading station

02 | Access to the control system

03 | Control panel and process control system

04 | Configurable magazine

05 | Machine loading from the left

06 | Machine loading from the right



New jobs can be prepared via the loading station while the robot is working.



On the turntable of the loading station, the workpieces are freely accessible from all sides.



Input and output of the pallets are detected by a light barrier.



The following *number of positions are available in the magazine for these clamping systems:

Cutting
ITS 115/148
48/96 positions



Cutting
PC 210
40/80 positions



Cutting
UPC
32/64 positions



Cutting
MTS 400
24/48 positions



Cutting
MTS 500
16/32 positions



*MTS 500 possible; maximum workpiece/obstacle contour 480×480mm must not exceed beyond the 45° corners of the pallet.

Technical data

EROWA Robot Leonardo - High	
Transfer weight	**120 kg**
Reach in machine	1,384 mm
System height, High Version	4,868 mm
Voltage (V+PE)	3x400
Interface	Ethernet
Workpiece identification	EWIS™ Rapid
Process control system	JMS 4.0

FACTS

- Integrated loading station
- Excellent space/pallet ratio
- RFID pallet recognition
- Monitored pallet input/output
- Two-machine operation

Robot Leonardo

EROWA Robot Leonardo High

Sophisticated functionalities and options



There is usually still space at the top of the factory floor.

It is important to take advantage of this low-cost space with Leonardo "High" version.

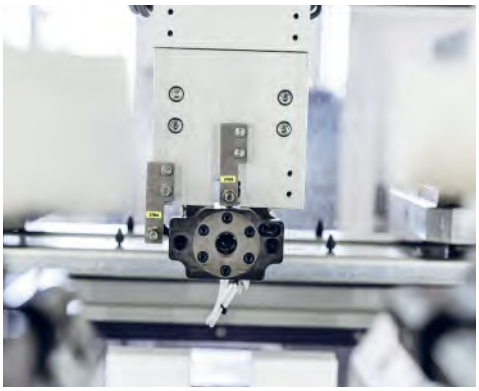

Strong gripper coupling for changing when using different pallet sizes.



Pallets weighing up to 120 kg are reliably carried.



The highly productive manufacturing cell consists of two machining centers and an EROWA Robot Leonardo High.



There is enough space in the magazine to run a complete night shift autonomously.



more information: Weblink

The maintenance agreement. Order right away when you buy.



EROWA Robot Leonardo, an asset for any production task.

EROWA Robot Compact 80

Plenty of power - many benefits

More autonomy for your machine, but limited space available? A typical case for an EROWA Robot Compact 80, which offers over 200 magazine positions on a footprint of just 2m². And it can also operate two machines if required.
The EROWA Robot Compact 80 offers the optimum ratio between the large number of magazine positions and the small footprint.
From small to really big. The EROWA Robot Compact 80 moves up to 11 different pallet sizes for different workpiece sizes.

more information:
Weblink - Robot Compact 80



01 | Status indicator integrated into the design

02 | Symmetrical design. On the left, right or between machines

03 | Long stroke for accessibility to machine tables

04 | Automatic gripper change for up to 11 clamping systems

05 | Magazine 2

06 | Configurable magazine levels

07 | Loading station in the ergonomically correct height



Small electrodes or large workpieces, space for everything.



Ingenious quick-load setup with the push-through magazines.



Loading of large parts through the optional loading station.



Max. number of available pallet positions per magazine level

EROWA Tooling	Standard magazine level	
	ITS Compact holder	11
	ITS 50 / ITS 50 C holder	11
	ITS holder 72	11
	ITS pallet 115	5
	ITS pallet 148	5
	PM 56	11
	PM 85	9
	PM 128	5
	PC 210	3
	UPC	2
	PalletSet W Frame PalletSet W Holder	2 3

Technical data

EROWA Robot Compact 80		
Transfer weight	**80 kg**	
Reach in machine	1,380 mm	
Gripper change	Yes	Automatic
Two-machine operation	Yes	
Voltage (V+PE)	3x400	
Interface	Ethernet	
Workpiece identification	EWIS™ Rapid	
Process control system	JMS 4.0	

FACTS

- 2 m² footprint for 200+ parts
- Two-machine operation
- EWIS automatic pallet identification
- Integratable loading station
- Pull-out magazine drawers
- Space-saving additional magazine

Robot Compact 80

EROWA Robot Compact 80

Movable on all levels

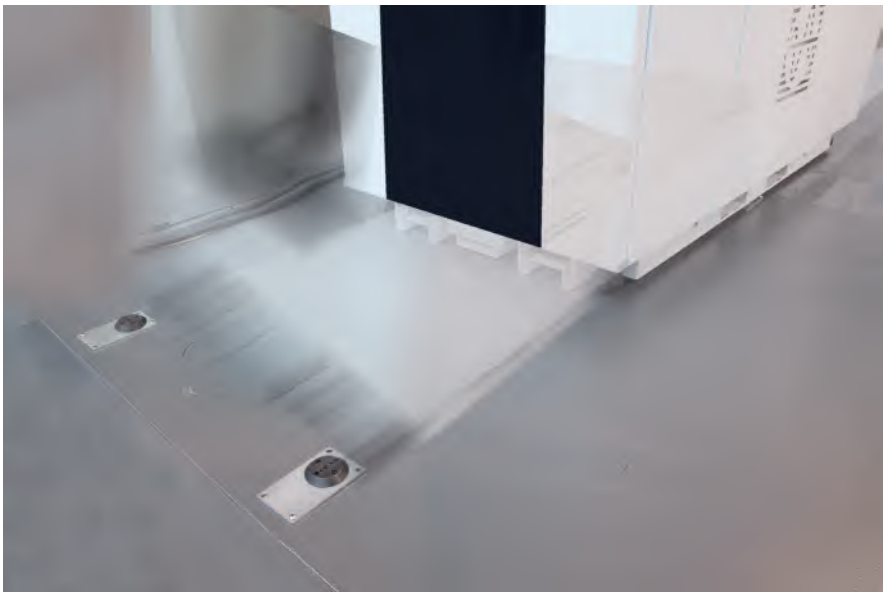

Pneumatic lifting unit. Smooth relocation and tolerant centering.



more information: Weblink

The maintenance agreement.
Order right away when you buy.



Lift – push away – lower. Manual machine operation with plenty of room to move.



In automatic mode, the robot is positioned right in front of the machine's loading door.

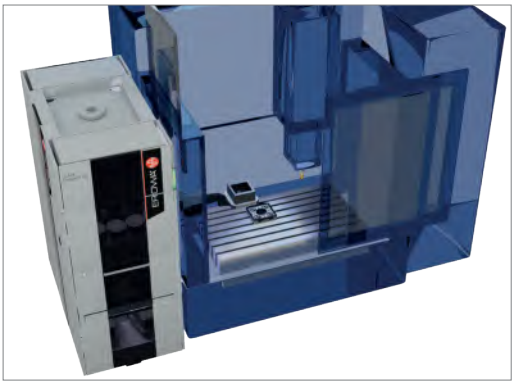

2 m² next to the milling machine is a very productively used space.



The additional magazine on the right of the ERC80 provides over 300 positions for workpieces to be machined.





Design study and reality. The milling and EDM sinking machines are both served by the same robot. Tested and found to be useful.

EROWA Robot Compact 150

Smart automation for all production technologies

The EROWA Robot Compact 150 impresses with its wide range of functions. It is the perfect automation solution for flexible loading of up to two production machines of all processing technologies - from milling to eroding. Thanks to its innovative design, the pallet loader offers an impressive magazine density with a small footprint. Thanks to its compact monobloc design, the robot can be integrated into the existing infrastructure and ready for operation within a short space of time.

more information:
Weblink - Robot Compact 150

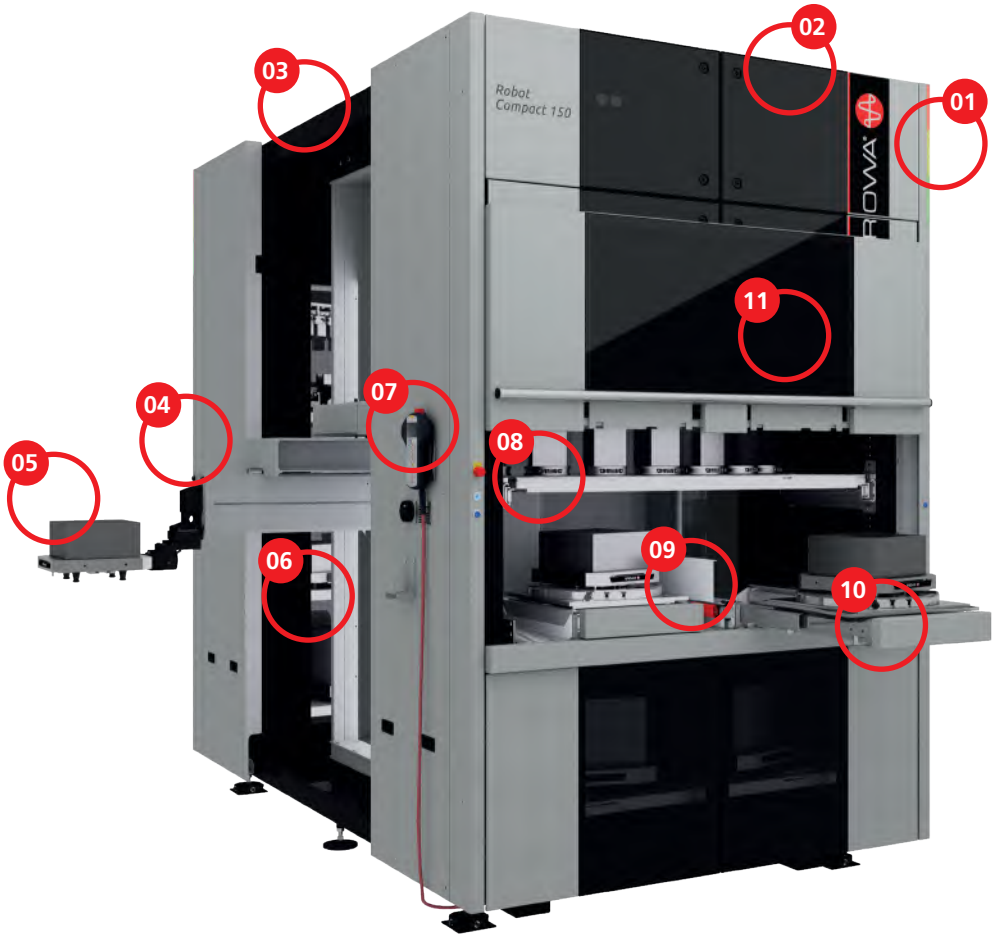

01 | Integrated status indicator light

02 | Control cabinet

03 | Symmetrical design. Left, right or between two machines

04 | Long stroke for accessibility to machine tables

05 | Automatic gripper change for up to 11 clamping systems

06 | Rack magazine 2 with configurable magazine levels

07 | Hand-held control unit

08 | Rack magazine 1 with configurable magazine levels

09 | Loading station (optional) at the ergonomically correct height

10 | Pull-out drawers (option)

11 | Lifting door loading station

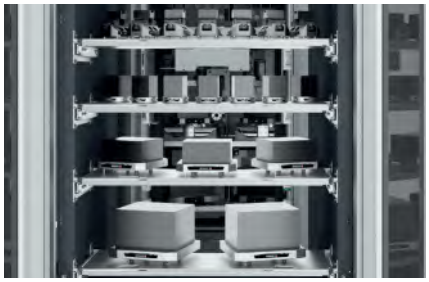

Over 500 EROWA pallets with different system sizes can be stored in the magazines (including a third magazine).



Pallets with maximum transfer weight 150 kg and workpiece sizes of up to 400x400x400 mm are reliably loaded/unloaded.



X-axis with two drives and long reach.



Number of pallet positions available in the ERC 150*

	EROWA Tooling	workpiece height in mm	no. Tooling per level	max. level per device*
	ITS 50 / ITS 50 C	100	17	16
		150	17	14
	ITS Holder 72	100	17	16
		150	17	14
	RTS 72 U	50	7	16
		75	7	14
	RTS 148 U	80	7	12
		120	7	10
	ITS 115 / 148	140	7	14
		250	7	10
	PC 210	150	5	12
		250	5	10
	UPC	150	3	12
		250	3	8
		400	3	6
	MTS 400	140	2	12
		250	2	8
		400	2	6
	PalletSet W	100	4	14
		200	4	10

* Standard configuration with two integrated magazines. For further information, please contact your EROWA specialist dealer.

Technical Data	
EROWA Robot Compact 150	
Transfer weight	**150 kg**
Reach in machine	1458 mm
Gripper change	Yes Automatic
Two-machine operation	Yes
Voltage (V+PE)	3x400
Interface	Ethernet
Workpiece identification	EWIS™ Rapid
Process control system	JMS 4.0

FACTS

- 4.7m² floor space for 500+ pieces
- Two-machine operation
- Extra large reach of the x-axis
- Loading station can be integrated
- Automatic mixed operation with different pallet sizes
- Space-saving additional magazine

Robot Compact 150

EROWA Robot Compact 150

Highest functionality, simple operation

The EROWA Robot Compact 150 loads machines with a wide range of processing technologies in a small footprint



EROWA Robot Compact 150 between a milling center and a die-sinking EDM machine.



Machines without automatic doors can be retrofitted with the "EROWA RoboDoor" (option).



EROWA Robot Compact 150 loads a Wire-EDM machine from the side.



more information: Weblink

The maintenance agreement.
Order right away when you buy.



Thanks to the EROWA JMS 4.0 process control system, all process data is visible at all times.

50 % more magazine capacity: The workpiece supply can be significantly increased with an optional third magazine.



Rotary magazine: For many small workpieces and electrodes.



Rack magazine: In a slim design and for large workpieces.



The optional loading station makes it possible to set up large and heavy workpieces (UPC and MTS pallets) at an ergonomic height while the robot is working.



Convenient loading and unloading thanks to pull-out magazine levels.



The folding door (optional) requires little space to open and offers good accessibility to the magazine compartment with maximum operator convenience.

EROWA Robot Dynamic 150

More performance for less investment

more information:
Weblink - Robot Dynamic 150

As much as necessary. This is the concept of EROWA Robot Dynamic 150. You buy only as much automation as is currently necessary. When the requirements for your production capacity change, you can extend the modular system at any time.

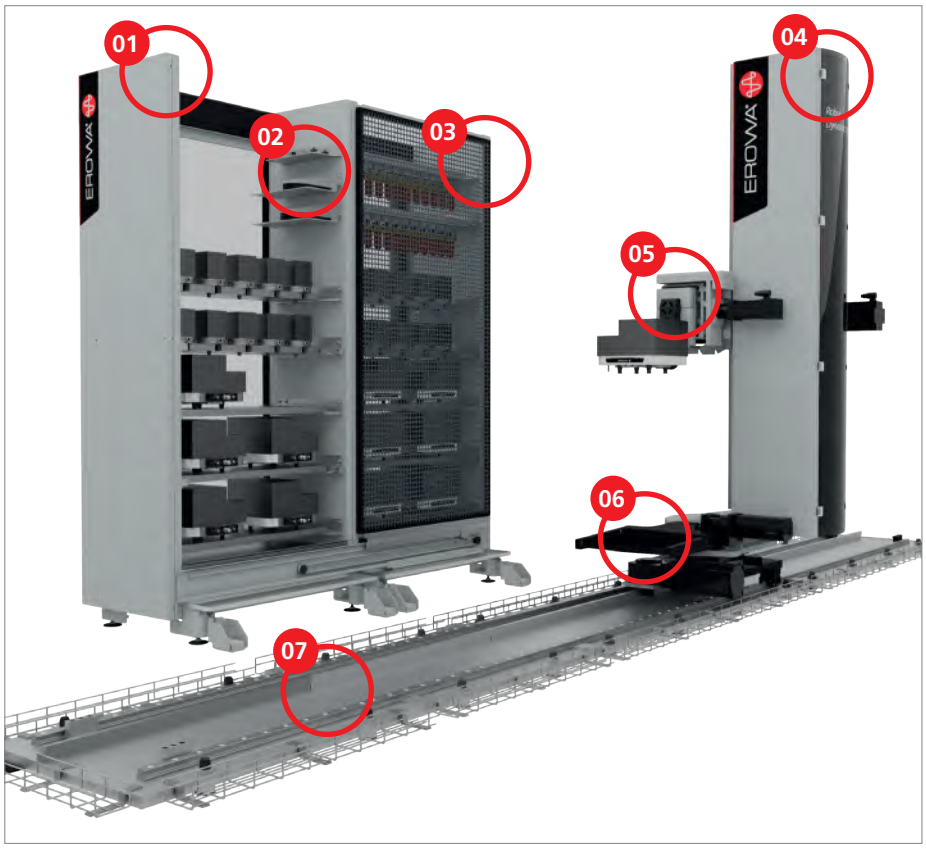

01 | Freely configurable frame magazines.

02 | Space-saving station for changing grippers.

03 | Ingenious work safety – during loading from the outside, the robot does not reach in.

04 | Transfer device with 150 kg load capacity.

05 | Space-optimized telescopic axis for long reach with small obstacle contour.

06 | Clean – the drip tray retains liquid.

07 | Linear axis, extendable in segments up to 30 meters in length.

08 | Process control system, transparent and informative.

09 | Access control via area scanner.

10 | Loading station at an ergonomic height for setup work

11 | Fully integrated 3D measuring station.



Rack magazines with space-saving sliding doors and pull-out levels



During manual loading of the magazines, the robot continues to work.

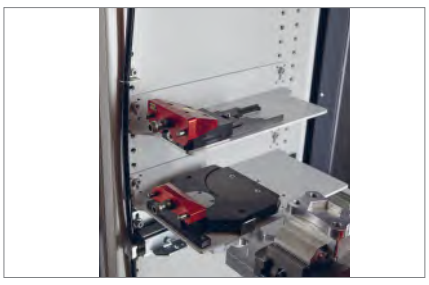

The gripper station in the rack magazine, short changeover times.

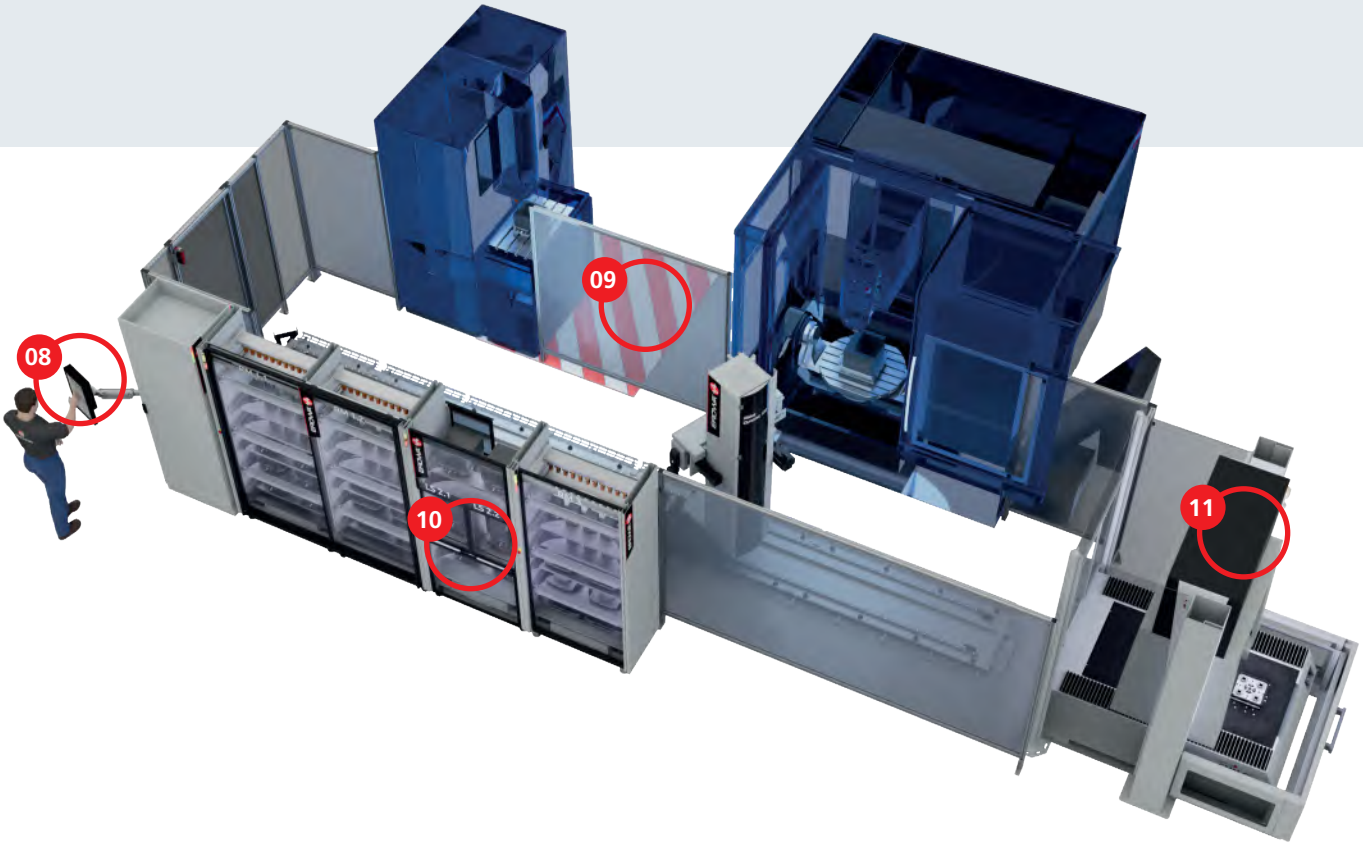

These tooling systems are especially suitable for the following types of machining:

WEDM

PalletSet W frame

PalletSet W holder



EDM

ITS 50

Holder 72



EDM and cutting

ITS 115/148



Cutting

PC 210



EDM and cutting

UPC



Cutting

MTS 400



Technical data

EROWA Robot Dynamic 150	
Transfer weight	**150 kg**
Reach in machine	1,370 mm
System height incl. rail	2,602 mm
Rail length max.	30 m
SVoltage (V+PE)	3x400
Interface	Ethernet
Workpiece identification	EWIS™ Rapid
Process control system	JMS 4.0

FACTS

- Highly modular design
- Integrated safety system
- Minimum footprint
- Autonomous magazines
- Up to 30 m rail length
- Low-cost safety barriers
- Optimally calculated investment

Robot Dynamic 150

EROWA Robot Dynamic 150

High modularity



Preserve your investment
Previously installed systems can be extended with additional modules at any time. Your basic investment is preserved, reducing the cost of the extension.



more information: Weblink

The maintenance agreement.
Order right away when you buy.

Up to twelve (12) CNC machines can be served by one Robot Dynamic 150.





Standardized interfaces to the important machine controls.



Uncompromisingly developed for Industry 4.0: High function density with the most straightforward operation.



Cost-effective: maximum benefit for minimum investment.

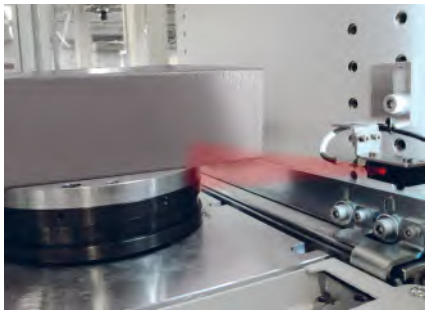

Process safety through monitoring via RFID chips.

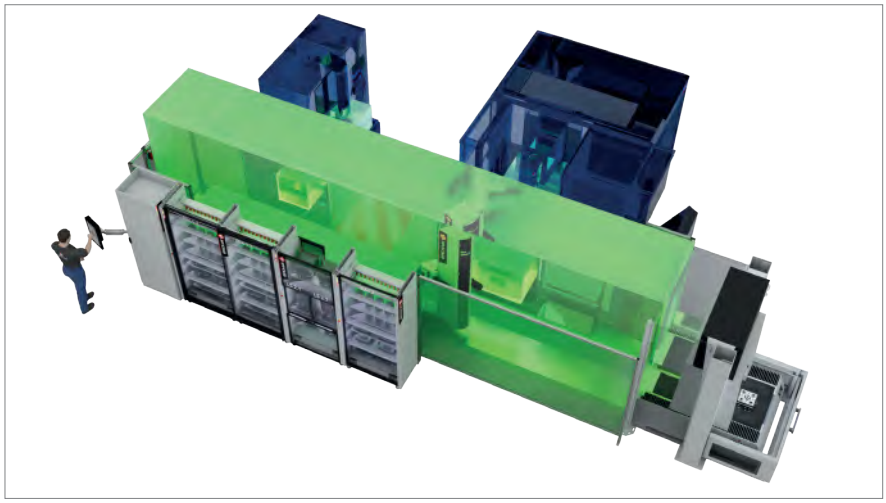

Thanks to the "Integrated Safety" software, only access protection is required. The barriers are modular and affordable to purchase

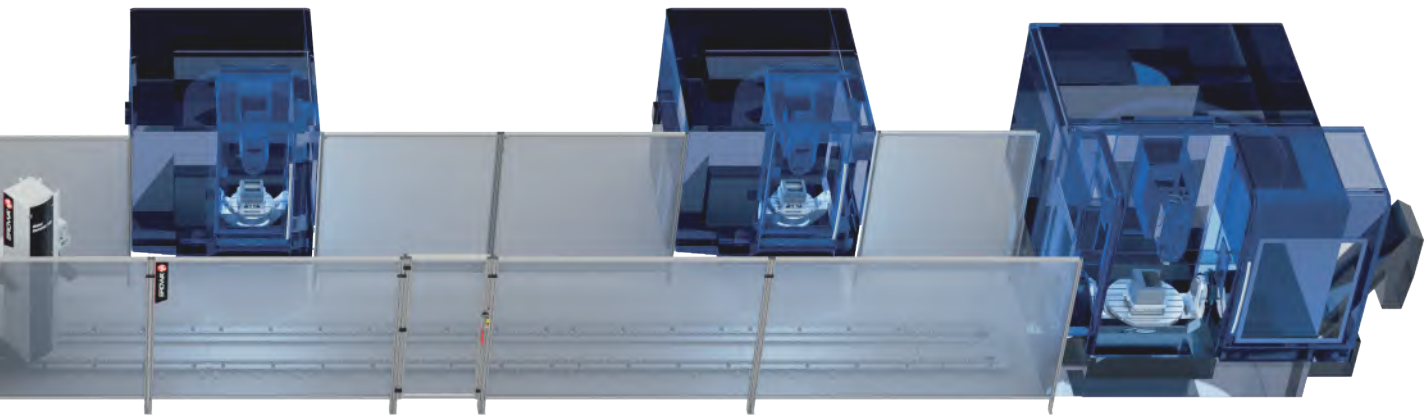

EROWA Robot Dynamic 250

The rail connects machines

The EROWA Robot Dynamic 250 can always be adapted and extended. The basic investment is protected. So it's always the right decision to go for the modular concept of the Robot Dynamic 250.

more information:
Weblink - Robot Dynamic 250

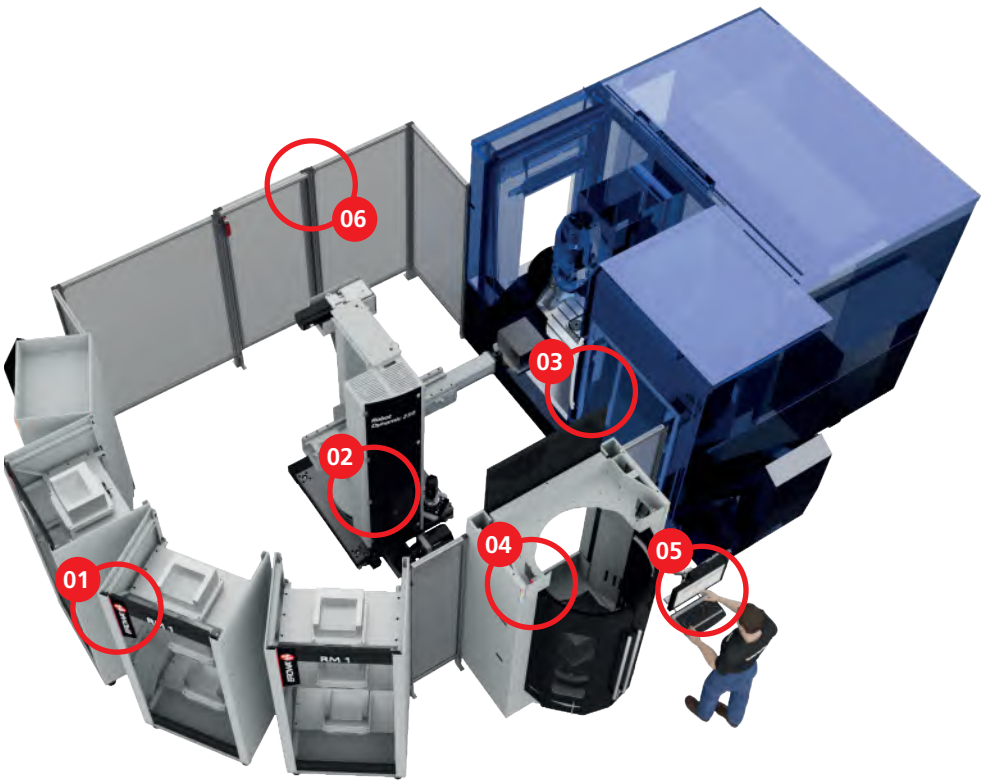

01 | Up to 12 rack magazines are available for work supply

02 | The transfer unit moves workpieces from 1 - 250 kg

03 | Automatic gripper change is integrated

04 | The loading station for loading and unloading palletized workpieces

05 | Always maintain an overview with the process control system

06 | Safety barrier according to machinery directive

07 | 20 meters of rail connect machines and magazines

08 | For electrodes or small workpieces: rotary magazines

09 | Loading station for oversized workpieces

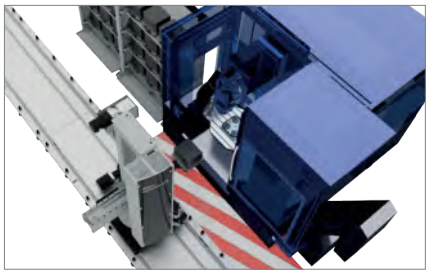

Enough space to work manually as well. Safety through area scanners.

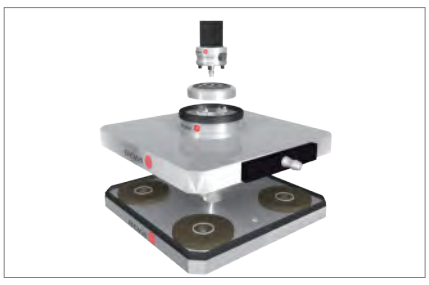

The robot changes the system size itself based on the orders it receives.



Each magazine position and each pallet is monitored by RFID chip. EWIS (TM).



These tooling systems are especially suitable for the following types of machining:

WEDM

PalletSet W frame

PalletSet W holder



EDM

ITS 50

Holder 72



EDM and cutting

ITS 115/148



Cutting

PC 210



EDM and cutting

UPC



Cutting

MTS 400



Cutting

MTS 500



Technical data

EROWA Robot Dynamic 250	
Transfer weight	**250 kg**
Reach in machine	1,950 mm
System height incl. rail	3,090 mm
Rail length max.	30 m
Voltage (V+PE)	3x400
Interface	Ethernet
Workpiece identification	EWIS™ Rapid
Process control system	JMS 4.0

FACTS

- Up to 30 m rail length
- Machines can be positioned on all four sides
- Transfer weight of up to 250 kg
- Telescopic arm with a large range
- Automatic gripper change
- Magazines configurable depending on tooling

Robot Dynamic 250

EROWA Robot Dynamic 250

Adapt as needed

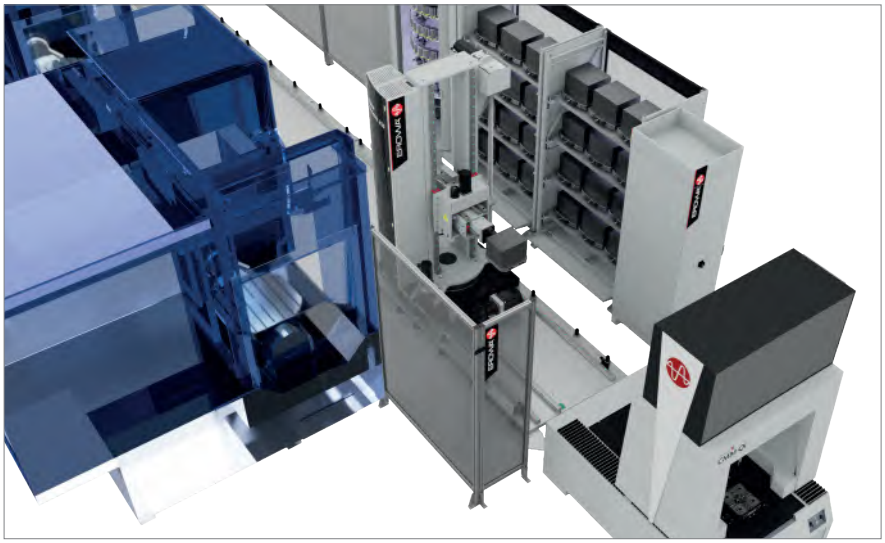

Measuring is often integrated into the process. A 3D coordinate measuring machine can be seamlessly integrated into the manufacturing cell.



Washing and drying, can be integrated with EROWA RoboSpa.

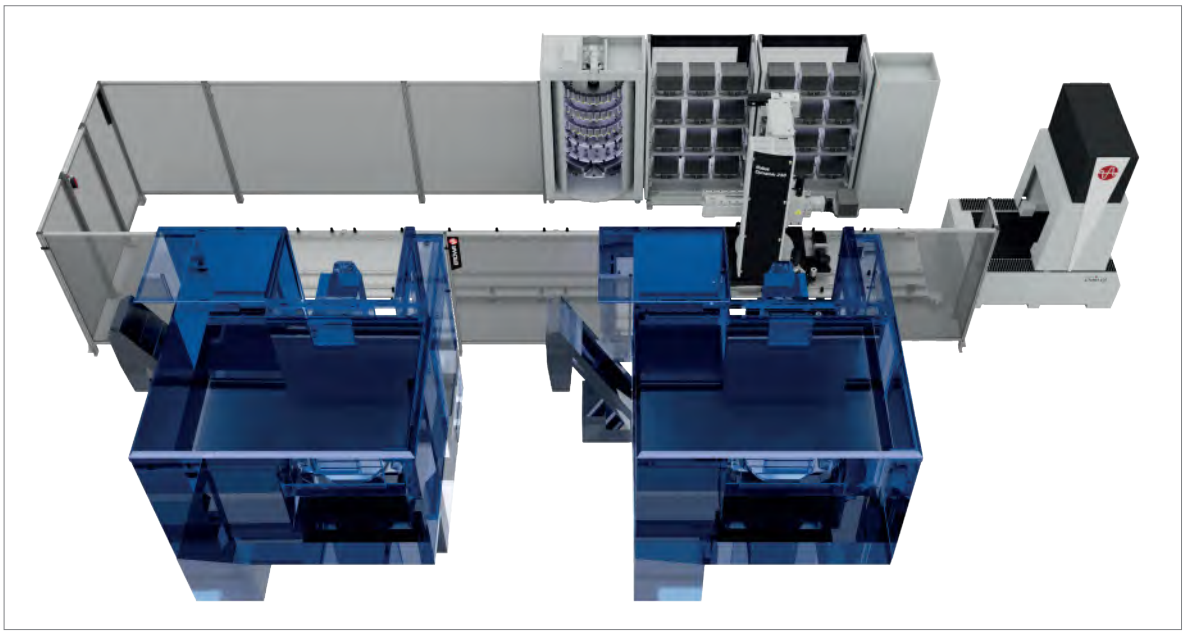

Automation in the workshop. Always adapted to the customer's needs.

The Robot Dynamic 250 provides machines of different technologies with workpieces and tools.



The process control system is a crucial factor in productivity.



The operator gets information about the utilization and efficiency of the production cell via the WebApp dashboard.



Which tools have to be changed before the end of the day? A look at the control system answers the question.



A Robot Dynamic 250 consists of various standardized modules. The transfer unit and various magazines form the basis. They are supplemented with a gripper station, loading station, and linear axis. Extensions are sure to fit any existing installations.

more information: Weblink

The maintenance agreement. Order right away when you buy.

EROWA Robot Dynamic 500

500 kg transfer weight

From zero to five hundred in 15 seconds. That's the time the robot needs to change the gripper and pick up the heavy pallet. Despite the capacity for heavy loads, lightweight pallets are transported with the same reliability as well.

more information:
Weblink - Robot Dynamic 500

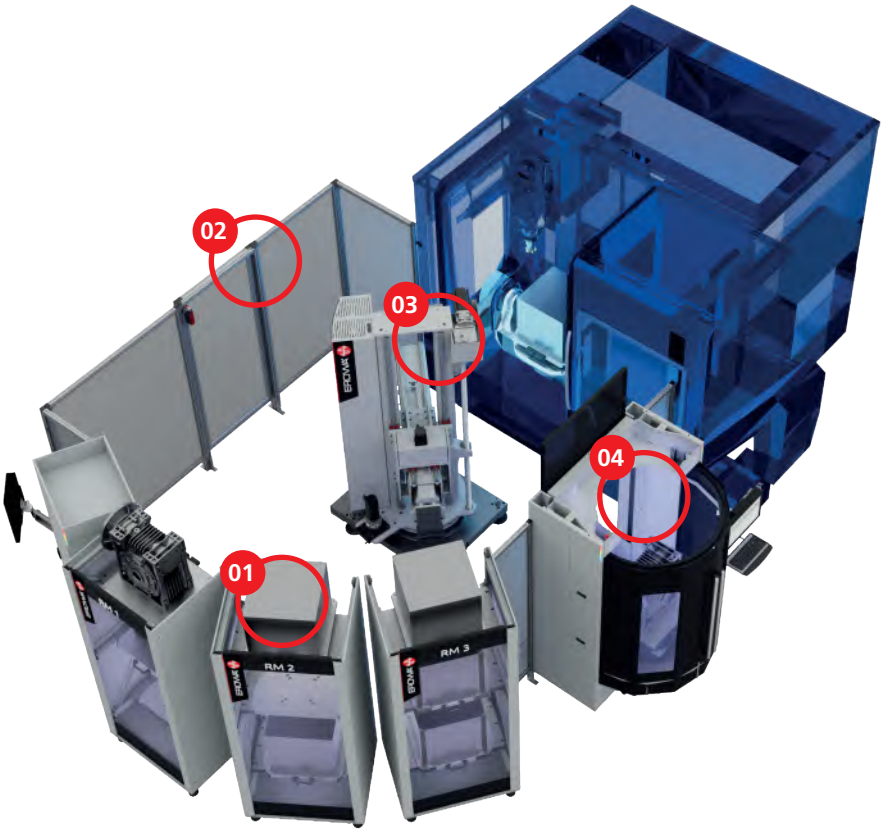

01 | The ERD 500 manages up to 9 rack magazines

02 | Access safety barriers

03 | The transfer unit

04 | Loading and unloading station

05 | Frame magazines for a large quantity of pallets

06 | Machine tools

07 | Controls a total of up to 12 machines

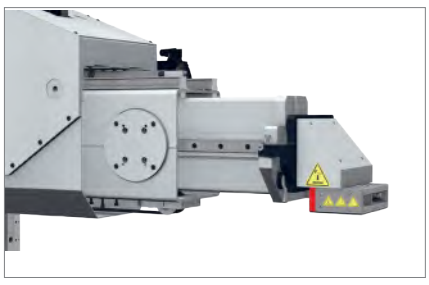

Gripper coupling WGS as the basis for all exchange grippers.

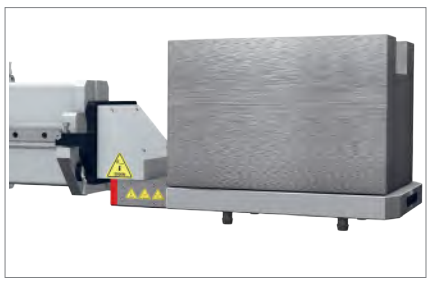

WGS grippers for 500 kg pallets.



Automatic gripper change when required.

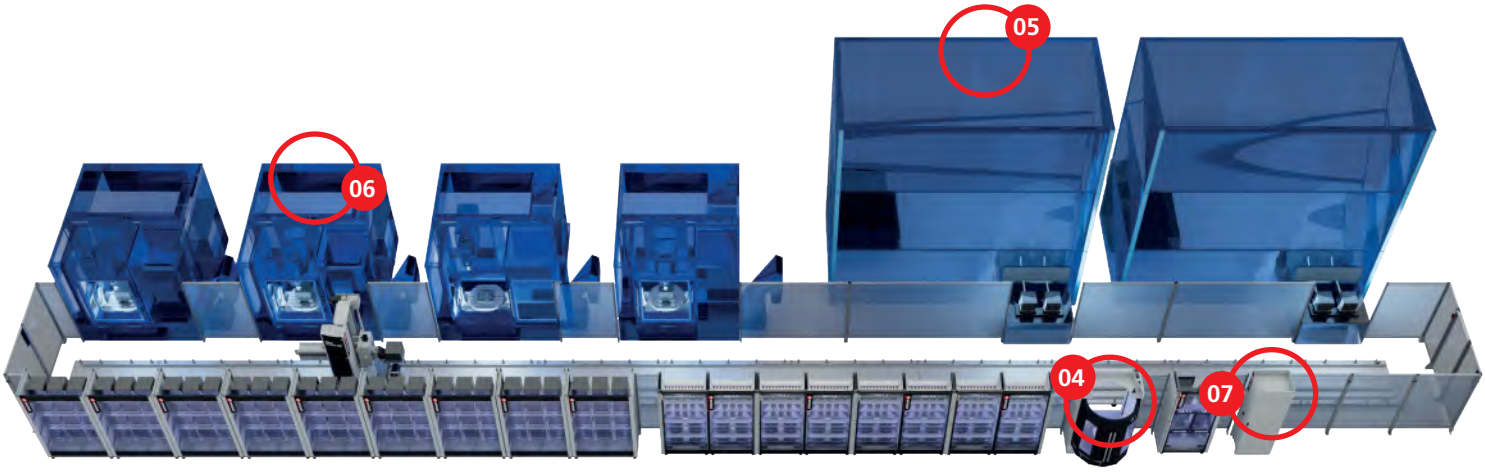

These tooling systems are especially suitable for the following types of machining:

WEDM

PalletSet W frame

PalletSet W holder



EDM

ITS 50

Holder 72



EDM and cutting

ITS 115/148



Cutting

PC 210



EDM and cutting

UPC



Cutting

MTS 400



Cutting

MTS 500



Technical data

EROWA Robot Dynamic 500	
Transfer weight	**500 kg**
Reach in machine	1,950 mm
System height incl. rail	3,090 mm
Rail length max.	30 m
Voltage (V+PE)	3x400
Interface	Ethernet
Workpiece identification	EWIS™ Rapid
Process control system	JMS 4.0

FACTS

- Up to 30 m rail length
- Transfer weight 500 kg
- Integrable cleaning station
- Long reach into the machine
- Integrated safety system
- Long-life systems

Robot Dynamic 500

EROWA Robot Dynamic 500

Suitable for loading large and small workpieces



Rack magazines with up to 2,000 kg load capacity.



These days, integrated quality control is a must. Integrating a 3D coordinate measuring machine in your process line will also take care of this requirement.

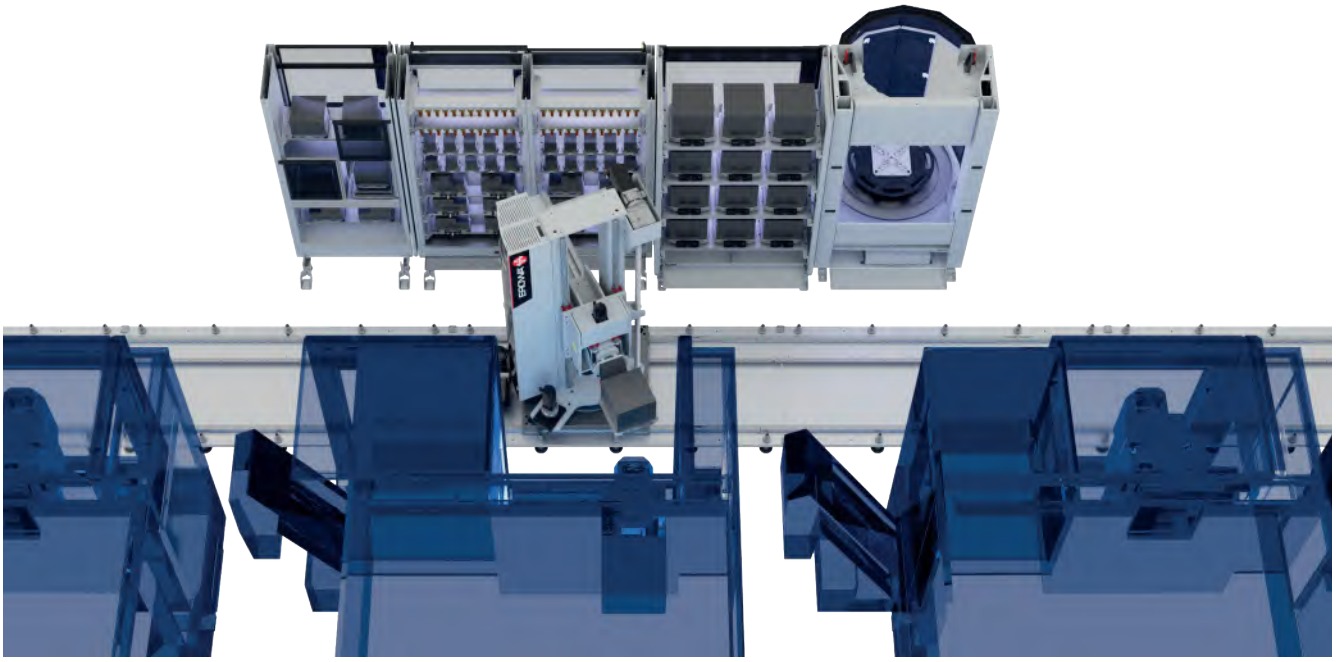

Enough magazine capacity for a whole weekend of autonomy.

Ergonomically correct loading station for setup work.

Standardized interfaces to the machining tools .

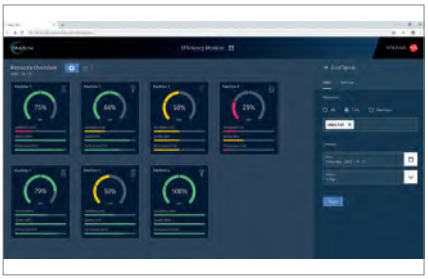

Maintain an overview at all times with the OEE dashboard.



The JMS 4.0 process control system provides essential support for the operators.



Each magazine position and each pallet are continuously monitored. The EWIS™ Rapid recognition system ensures a clear view.



From small electrodes to large workpiece pallets – the EROWA Robot Dynamic 500 serves them all.

more information: Weblink

The maintenance agreement. Order right away when you buy.

EROWA Robot Six

Six axes for the future

Whether it's handling palletized workpieces, blanks, tooling, or all together – EROWA develops a solution specifically tailored to your Smart Factory. For this purpose, we use standardized components from our proven EROWA portfolio.

more information:
Weblink - Robot Six

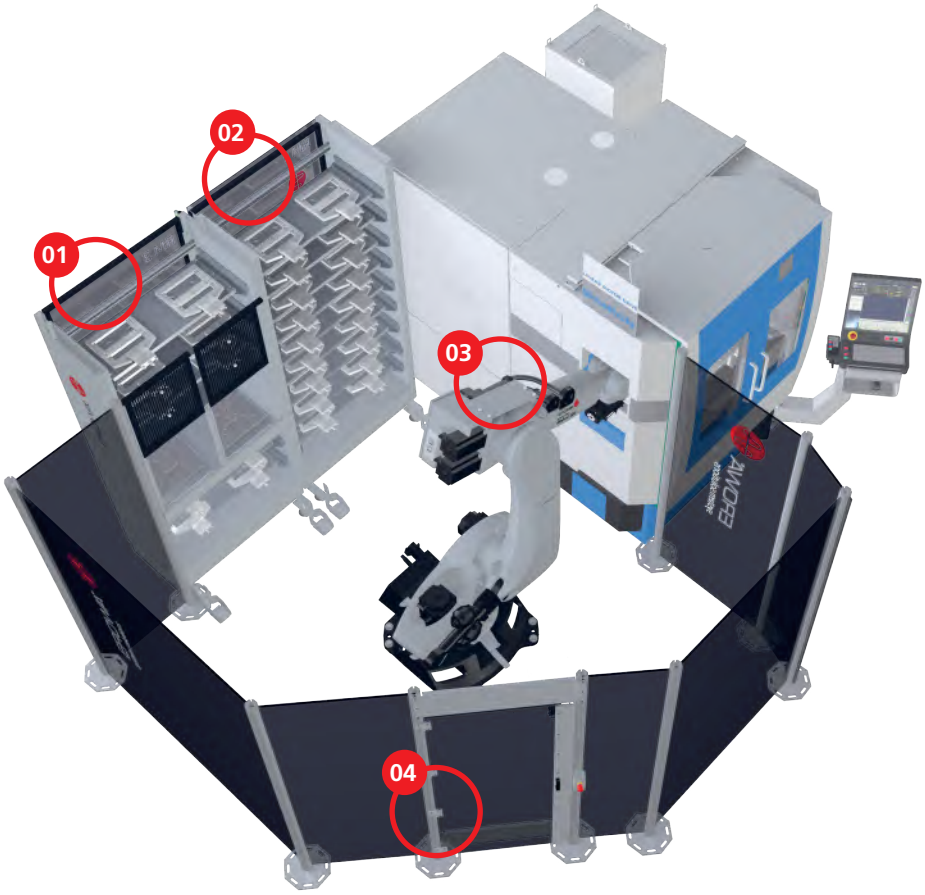

01 | Rack magazine with integrated loading station

02 | Rack magazine

03 | Robot Six handling facility

04 | Secured door in the safety barrier

05 | Robot Six on rails

06 | Transparent access barrier

07 | Loading and unloading stations with setup station

08 | Rack magazines

09 | System control



For projects up to 800 kg and a travel distance of 30 m.



Desired autonomy and average processing time give the required number of storage positions.



The utilization of the robot is calculated in order to always provide the machine with supplies in time.

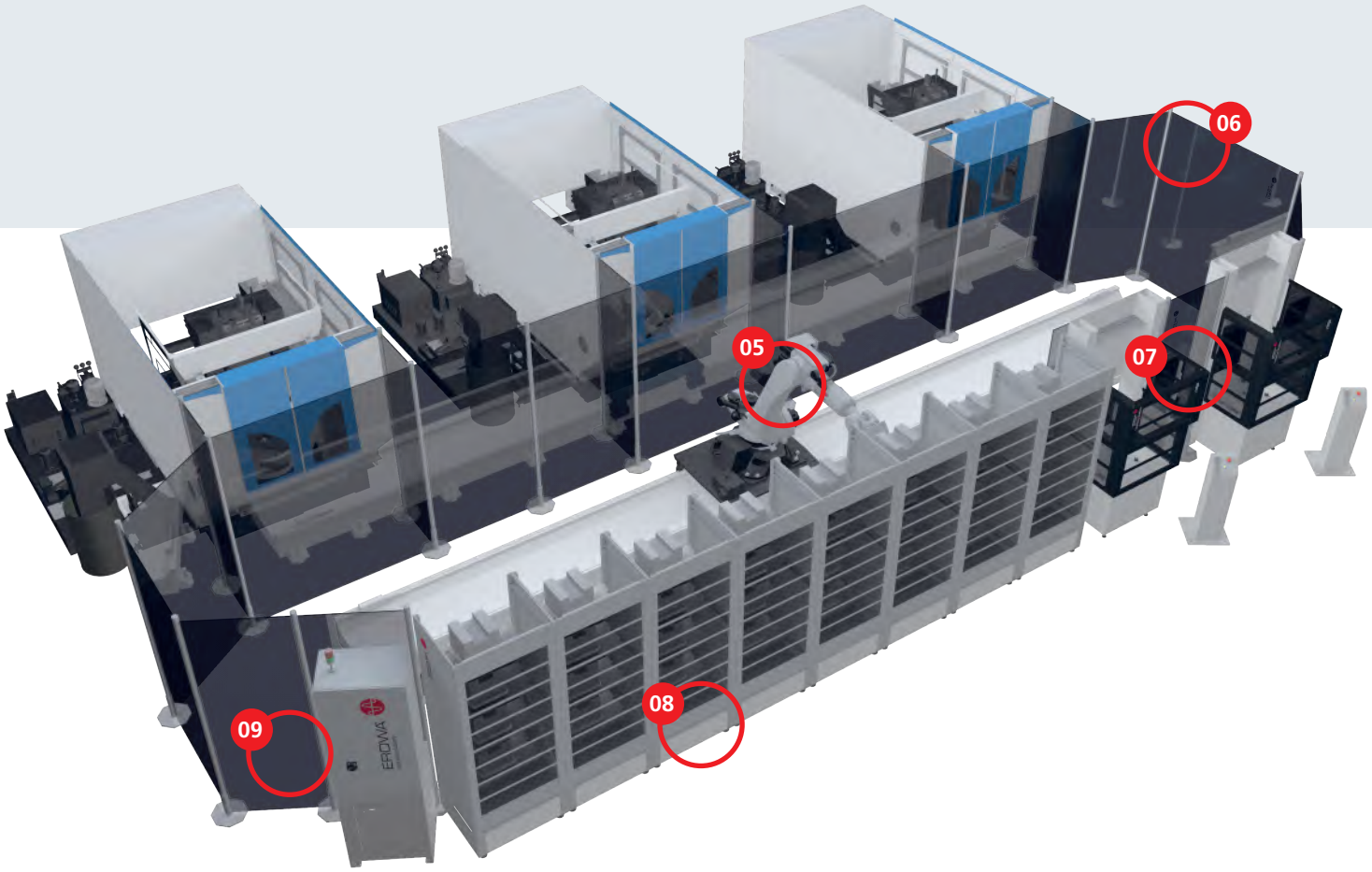

These tooling systems are especially suitable for the following types of machining:

WEDM

PalletSet W frame

PalletSet W holder

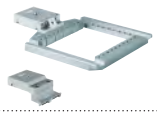

EDM

ITS 50

Holder 72



EDM and cutting

ITS 115/148



Cutting

PC 210



EDM and cutting

UPC



Cutting

MTS 400



Technical data

EROWA Robot Six	
Transfer weight	**30 - 800 kg**
Rail length max.	30 m
Voltage (V+PE)	3x400
Interface	Ethernet
Workpiece identification	EWIS™ Rapid
Process control system	JMS 4.0

FACTS

- Application and demand-oriented
- Loading of pallets, blanks, tools, semi-finished products
- Easy control with JMS 4.0
- Connection of AGV/AMR units
- Proven, affordable EROWA standard components

EROWA Robot Six

Carefully thought out down to the last detail



Job Management System 4.0 – the core of productivity
Everything at a glance in real-time. Operators and planners can see the status of the system, the individual machines, the work supply, and much more.
Modern web technology and an optimal screen design show the efficiency of the entire system at all times on PCs or mobile devices.

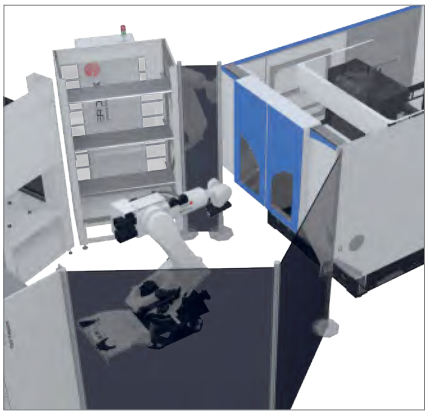

When only one machine is served, the rail is not necessary. The six-axis robot has sufficient freedom of movement to reach the table chuck from each magazine position.

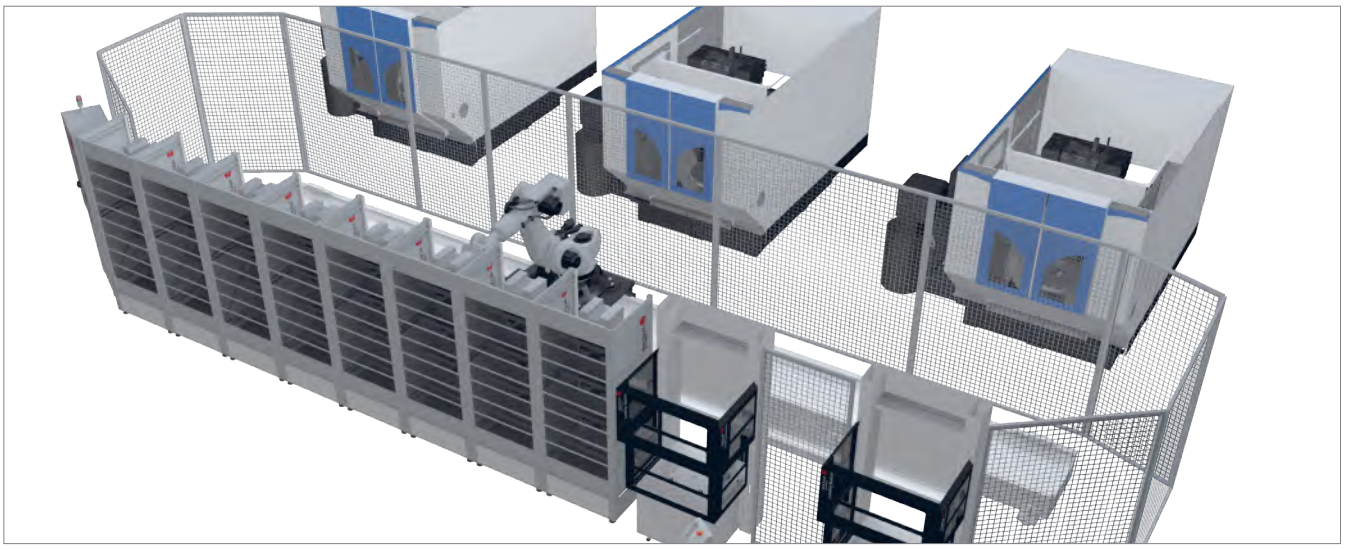

Typical project planning for a flexible production line. The input and output stations are the workstations of the system operators.



A project for tool and mold making. Seven identical die-sinking EDM systems are served by the same robot. The electrodes are provided in the rotary magazines and the workpieces in the racks. A measuring station for quality control is also integrated.



more information: Weblink

The maintenance agreement. Order right away when you buy.



Both palletized individual parts and electrodes and blanks for active clamping devices are reliably changed by Robot Six.

EROWA LoadMaster Compact
EROWA LoadMaster Compact Heavy

For heavy workpieces

more information:
Weblink - LoadMaster

The highest standard of mechanical engineering quality; over 35 years of experience in factory automation; global presence. It is fair to say that the handling facilities of the LoadMaster series manage their loading tasks perfectly. And this in addition to remarkable investment and ROI factors.

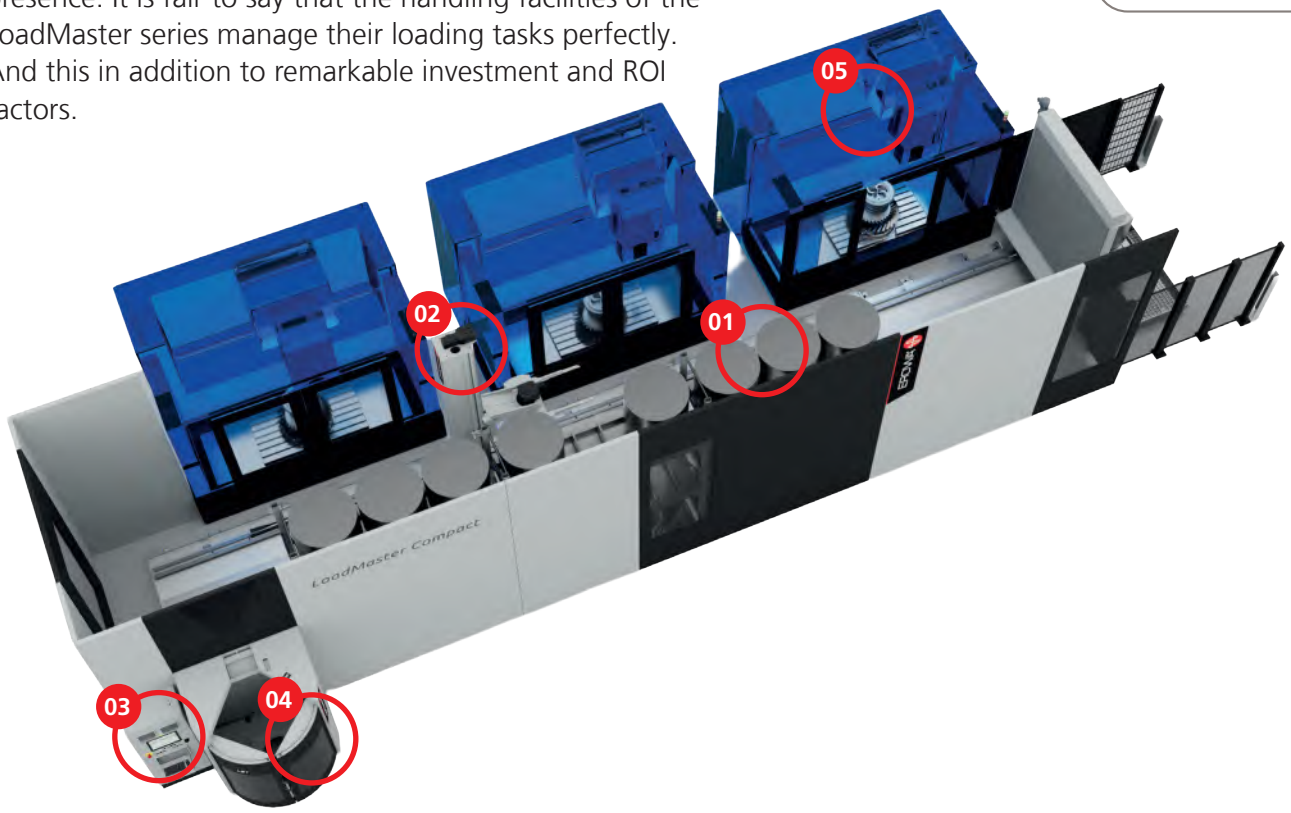

01 | Flexibly configurable pallet storage

02 | Transfer unit «LoadMaster Compact» or «LoadMaster Compact Heavy»

03 | Control panel and process control system

04 | Loading/setup station

05 | Machine tool 1

06 | Walk-in setup station

07 | Safety light barrier

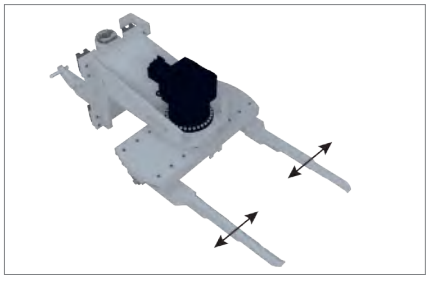

Multifork gripper automatically adjusts to the pallet size.

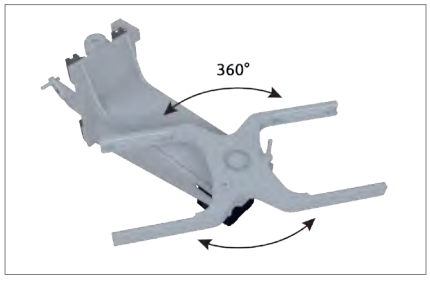

Twinfork gripper for quick change-over on the machine.

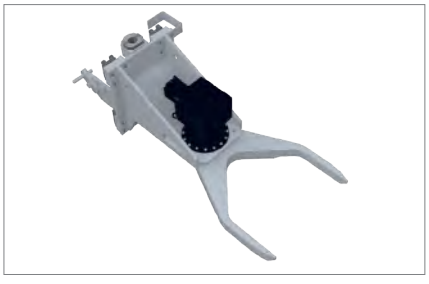

Single fork gripper (Standard) with rotation axis for entering narrow spaces.

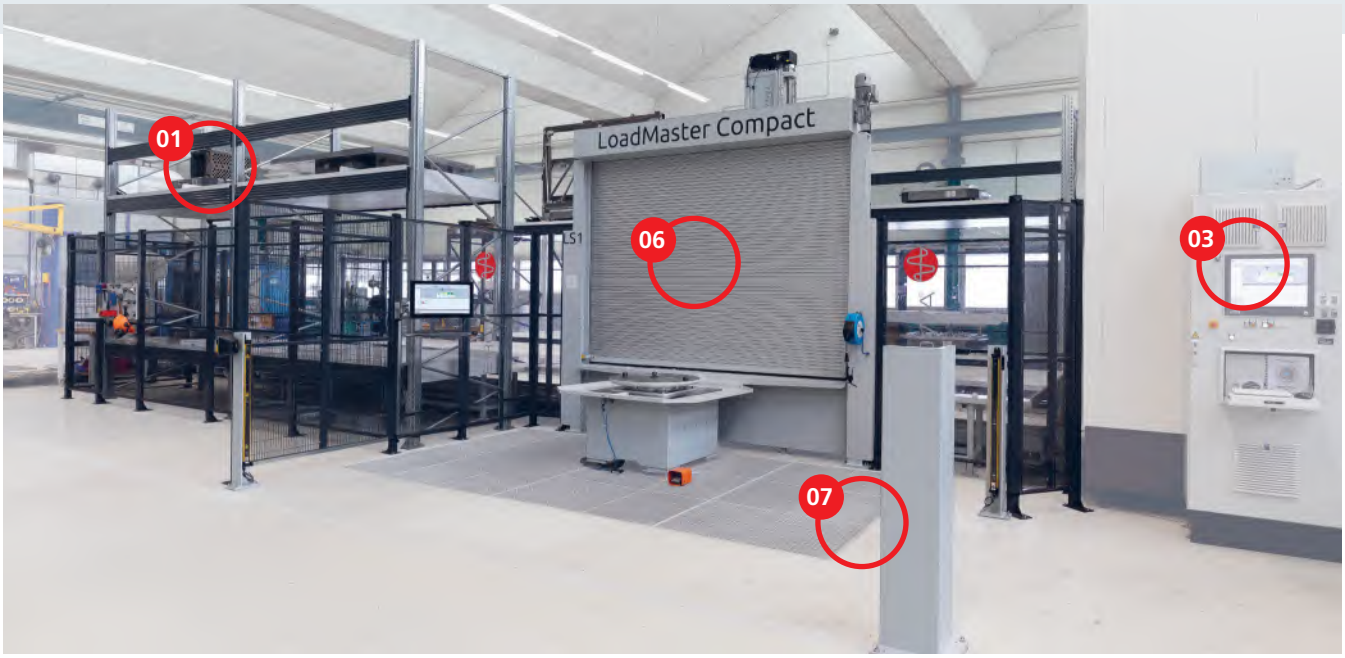

LoadMaster Compact / LoadMaster Compact Heavy

These tooling systems are especially suitable for use on the LoadMaster Compact/ LoadMaster Compact Heavy

Cutting
PC 210



EDM and cutting
UPC



Cutting
MTS 630x630 mm



Cutting
MTS 600x800 mm



Cutting
GTS from 630x630 mm



Technical data

LoadMaster Compact / LoadMaster Compact Heavy	
Transfer weight LMC	**800 - 3000 kg**
Transfer weight LMC Heavy	**3000 - 5000 kg**
System height	from 3.5 to 5.0 m
Rail length	from 6 to 30 m (Longer rail on request)
Voltage (V+PE)	3x400
Interface	Ethernet
Process control system	JMS 4.0

FACTS

- Up to 5000 kg Transfer weight (depending on model type)
- Up to 4 levels in pallet storages
- Ergonomic setup stations
- Individual modules can be combined
- Integrated safety device
- Adapted grippers

EROWA LoadMaster Compact
EROWA LoadMaster Compact Heavy

Very flexible loading possibilities



Pallet storage locations to the left and right of the transport rail.

The clear height of the storage locations depends on the ceiling height and the workpiece sizes.



Loading or unloading station. If the light barrier is interrupted, the system is stopped.

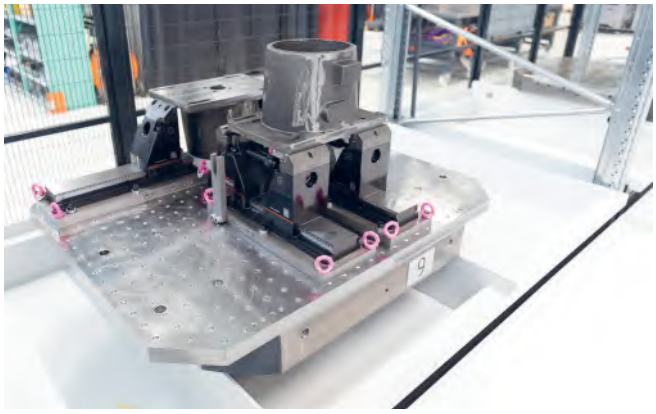

Existing fixtures are palletized and reused seamlessly. The «LoadMaster Compact Heavy» transfers workpieces (incl. pallet) with weights of up to 5000 kg.



With the JMS 4.0 ProductionLine software, the operator maintains an overview of the entire pallet store, the status of the machine, and the progress of orders at all times.



It starts with the basic module. That's enough for one machine.



If the storage locations are running low, extend the system by a module.



For the preparation of large workpieces - the walk-in setup station.



A large workpiece is prepared via the walk-in setup station and fed into the process. Easily accessible for work all around and for transport by overhead crane.

more information: Weblink

The maintenance agreement. Order right away when you buy.

EROWA Lift

Easy loading of machines

The EROWA Lift is designed for frequent pallet changes directly onto the machine or into the handling facility. Mounted permanently next to the machine, it is always there when needed.

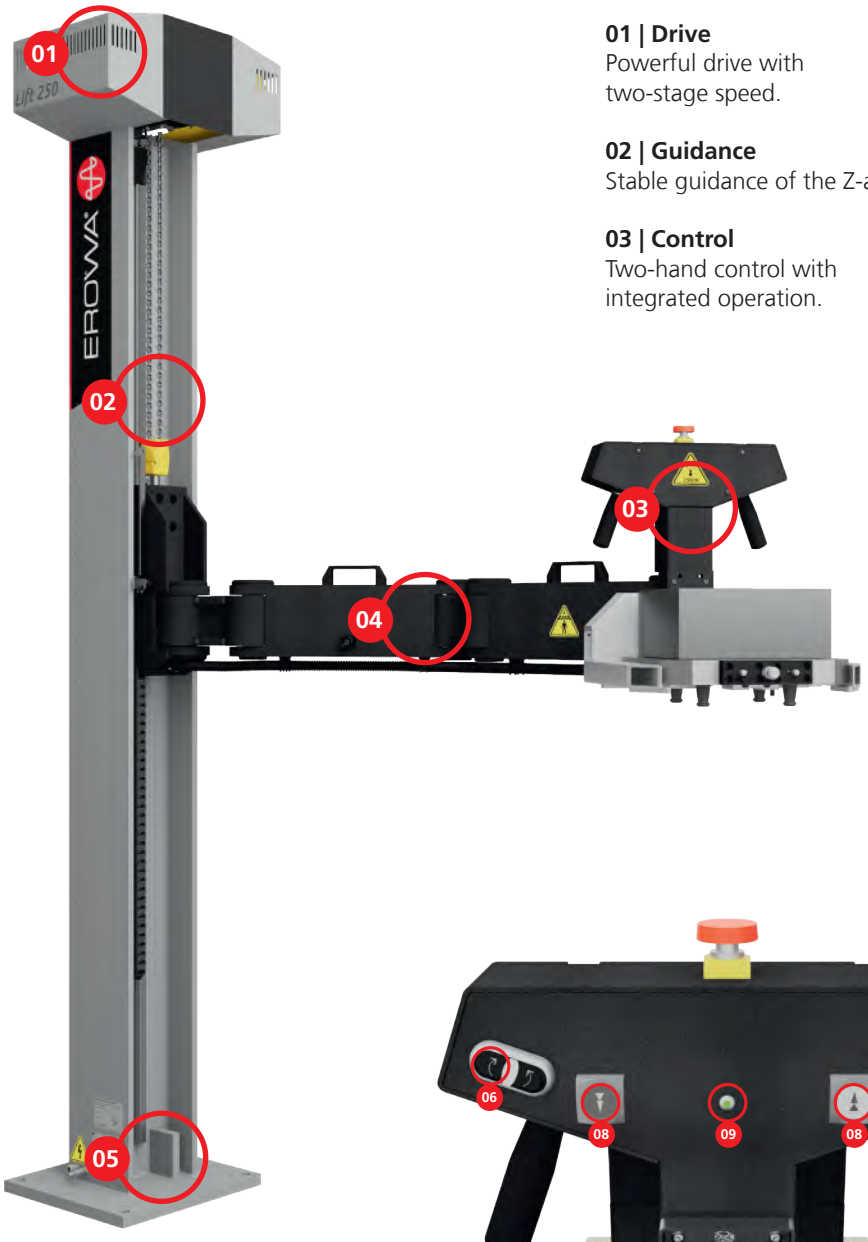

01 | Drive
Powerful drive with two-stage speed.

02 | Guidance
Stable guidance of the Z-axis.

03 | Control
Two-hand control with integrated operation.

04 | Arm
Segmented arm for optimum accessibility.

05 | Stabilization
Solid floor anchoring with leveling.

06 | Swivel function (option)
Two-handed control of the swivel axis.

07 | Gripper button (option)
Safety push buttons

08 | Up/down movement
The up/down movement buttons with two speeds at the touch of a button.

09 | Gripper monitored (optional)
RCS5 indicator light — Gripper is engaged.

10 | Switchover kit (optional)
Switch between RCS5 and gripper.



Back-friendly lifting of the pallet. Directly from the workshop trolley into the magazine.Also accessible at the very top.

More information EROWA Lift

more information:
Weblink - Lift

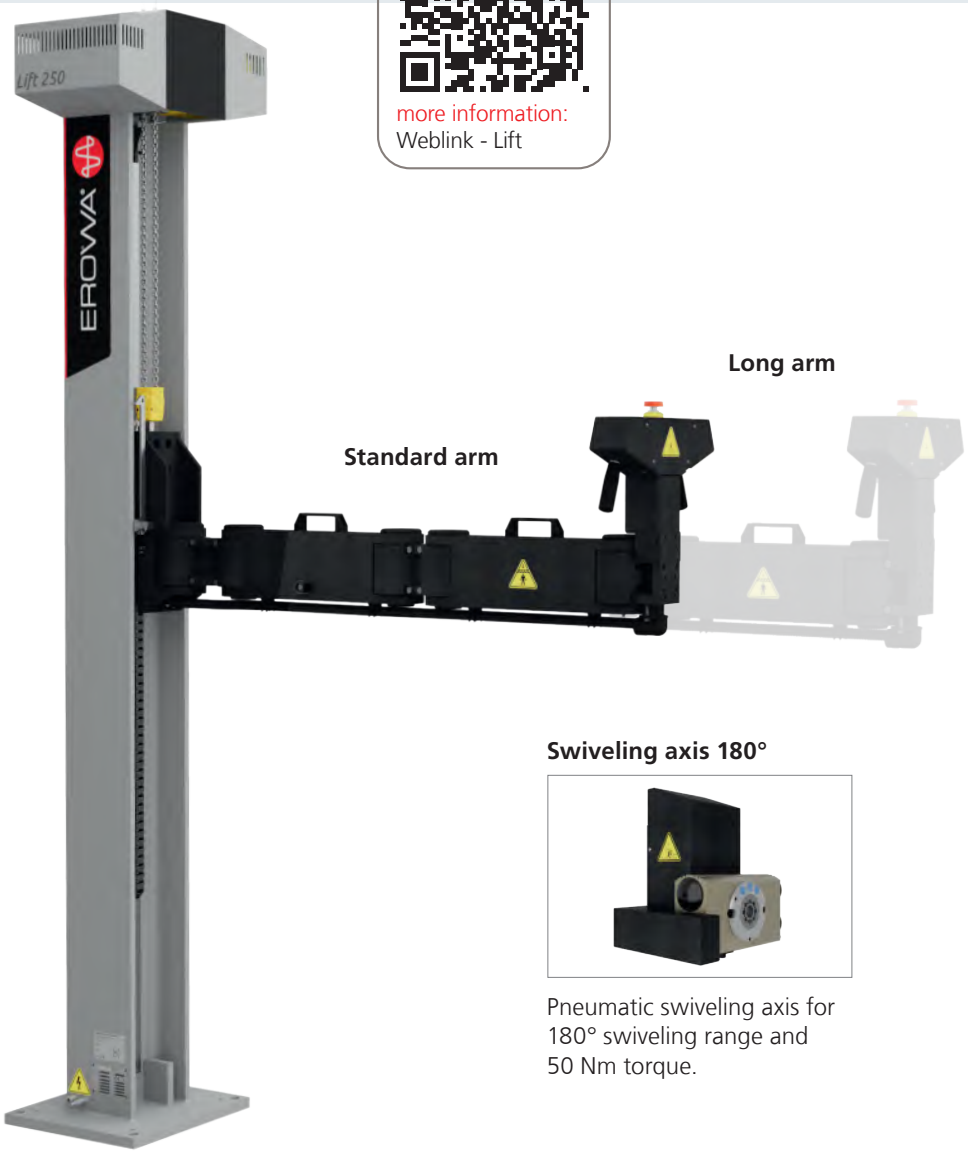

Gripper RCS 5

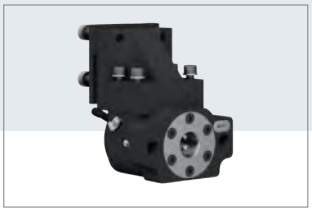

Gripper ITS 148



Gripper fork UPC / MTS 400 / MTS 500 with RCS 5

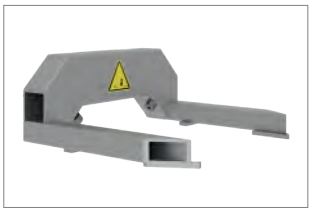

Swiveling axis 180°

Pneumatic swiveling axis for 180° swiveling range and 50 Nm torque.

RCS 5 Gripper with load hook



max. 2500 N.
Load hook for RCS 5 coupling.

EROWA Lift

Technical data

ER-046250	EROWA Lift Standard	EROWA Lift with long axis
Transfer weight	max. 250 kg	max 100 kg
Gripper movement	Z = 1,660 mm X = 1,300 mm Swiveling range 360°	Z = 1,660 mm X = 1,850 mm Swiveling range 360°
Installation	4 heavy load anchors ø 18 x 132 mm Floor strength min. C20/25	
Pneumatic system	min. 5 bar	
Voltage	3 x 208-400 V	
Frequency	50/60 Hz	
Drive	Rapid traverse rate 4 m/min Creep speed 1 m/min	
Note	Grippers must be ordered separately	

EROWA LiftGear



Pallets weighing more than 20 kg must be easily and precisely inserted into UPC or MTS chucks on the machine tool. With the LiftGear and an overhead crane, this is a piece of cake.

Your advantages
- Gentle machine and handling loading.
- Quality improvement through careful and safe handling.
- Safety-compliant work.

Application:
Loading of machine tools, pallet magazines, robot magazines, presetting stations, measuring stations.

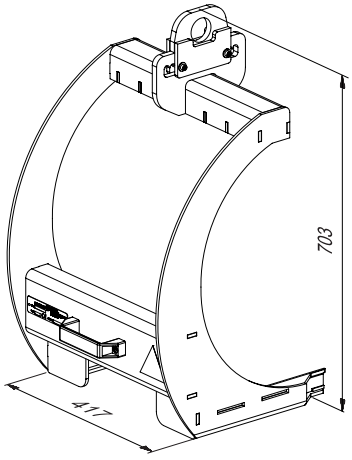

EROWA LiftGear UPC

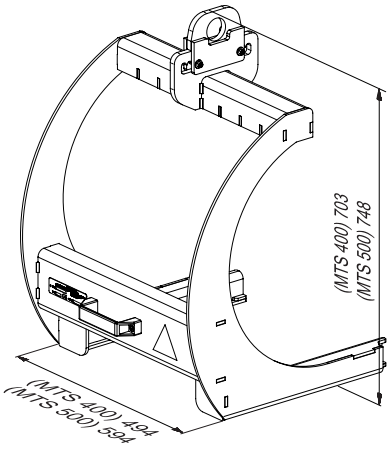

EROWA LiftGear MTS 400 / MTS 500

Technical data

	ER-180400	ER-179729	ER-179963
	LiftGear UPC	**LiftGear MTS 400**	**LiftGear MTS 500**
Transfer weight	250 kg, incl. pallet	250 kg, incl. pallet	250 kg, incl. pallet
Pallet type	UPC 320 x 320 mm	MTS 400	MTS 500
Maximum workpiece dimensions L x B x H	320 x 380 x 450 mm	400 x 450 x 450 mm	500 x 550 x 450 mm



EROWA LiftGear UPC



EROWA LiftGear MTS



more information:
Weblink - Contact

Contact us with your requirements.
Several other variants of the LiftGear series are available.

EROWA Process control system

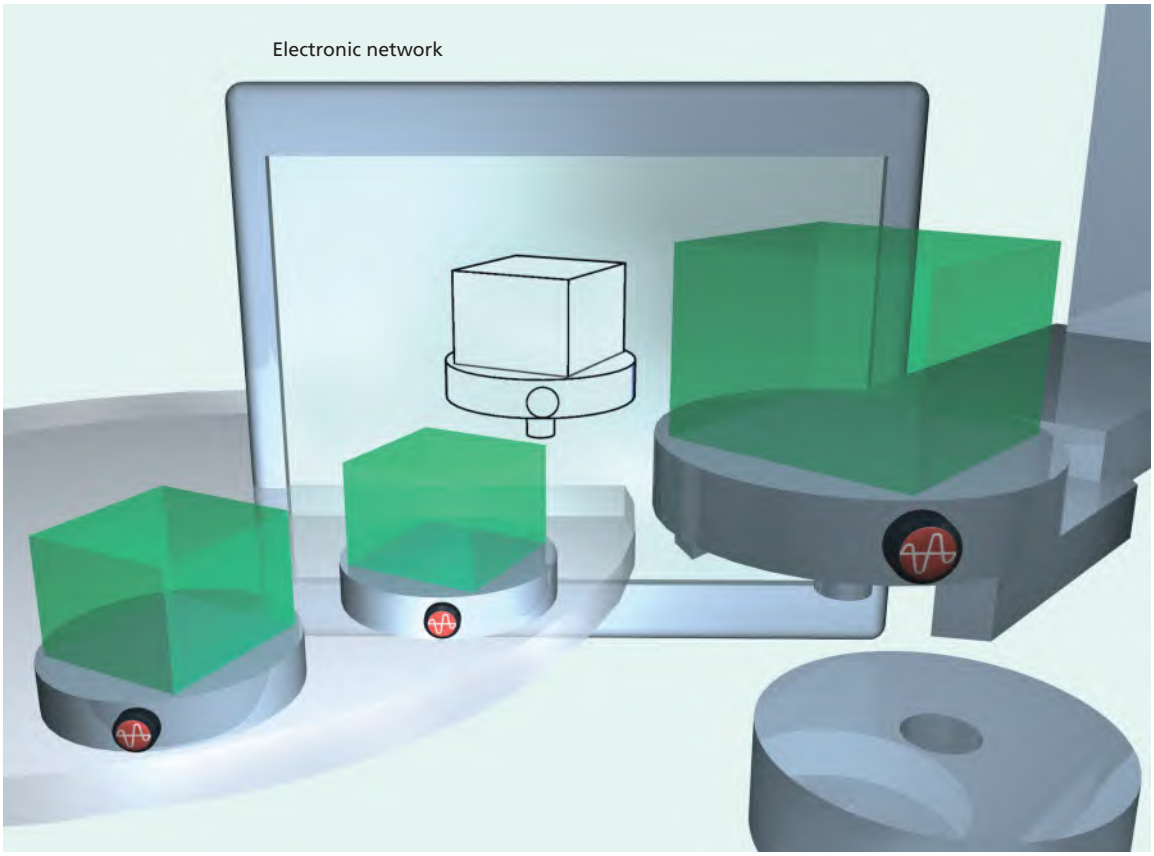

EROWA Process control system

Integration of systems and communication channels. This precludes sources of error as much as possible, and will guarantee a faster flow of communication.

For chip-removing processes

For EDM sinking

For WEDM

EROWA PROCESS CONTROL SYSTEM

EROWA Smart Factory 424
Digital production in just a few steps

EROWA JMS 4.0 process control system 426
From the production cell to interlinked production
A suitable solution to meet any requirement 430
JMS 4.0 Productivity Suite 431

EROWA Smart Factory

Digital production in just a few steps

Today's production industry is situated in a dynamic environment which calls for new and flexible answers. New challenges arise every day. Demands for quality and availability are on the increase.

EROWA's solutions are modular and scalable: independent of the various production processes, machine tools by all manufacturers and of different generations can be integrated.

FACTS

- More process reliability through data automation
- Tailor-made solutions on the basis of EROWA standard products
- More efficiency thanks to an unbroken electronic data flow
- Less machine down-time

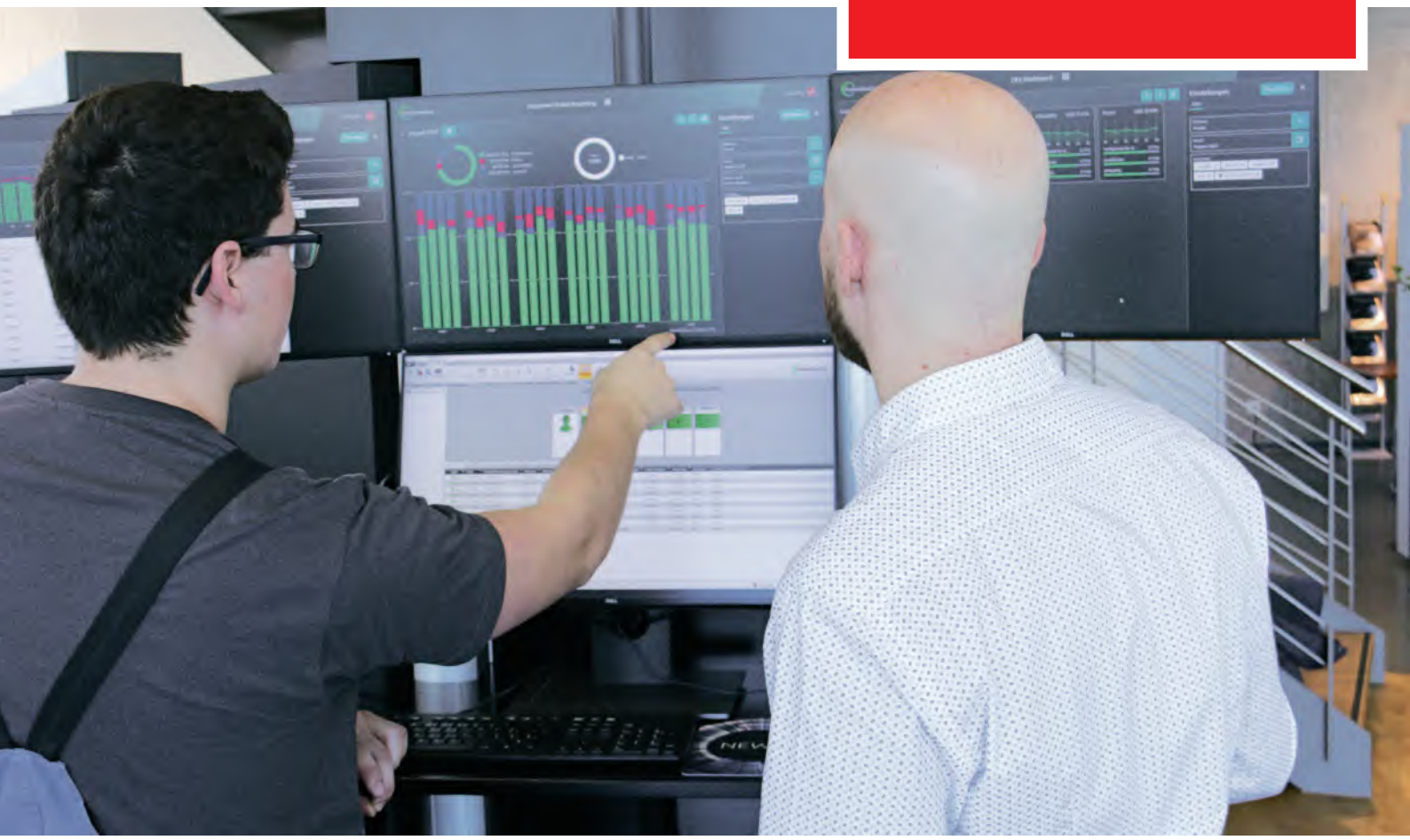



Smart Factory is not a mere buzzword for us I The integrative optimization of process chains has been in our genes ever since EROWA was established in 1971. Thus we may claim that it is not merely since the trend towards Industry 4.0 that our customers have raised their production to a new level with modular solutions from the EROWA portfolio.

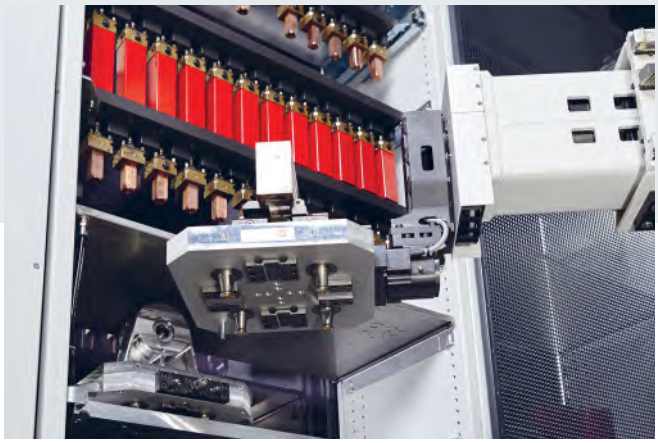

Degree of automation to meet your requirements I Thus workpieces can be loaded and unloaded in a fully automated process with tailor-made EROWA robots, which, is not an indispensable requirement for an efficient production cell. This starts with the automation of the data, and the automatic loading process can happen in a second step on request.



With competent advice to the right decision I At EROWA, we have listened to the wishes of our customers from a wide variety of corporate sizes. Thus we provide tailor-made solutions that fit your production process and degree of digitalization.

more information:
Weblink - Smart Factory

EROWA JMS 4.0

From the production cell to interlinked production

Flexible interfaces with upstream and downstream systems integrate production into the existing IT infrastructure.

The imported process data are transmitted to the relevant production cells at the right time and in the right format.

Feedback from machines, robots or the operator are recorded and centrally prepared for evaluation. Thus the entire process can be monitored and checked at all times.

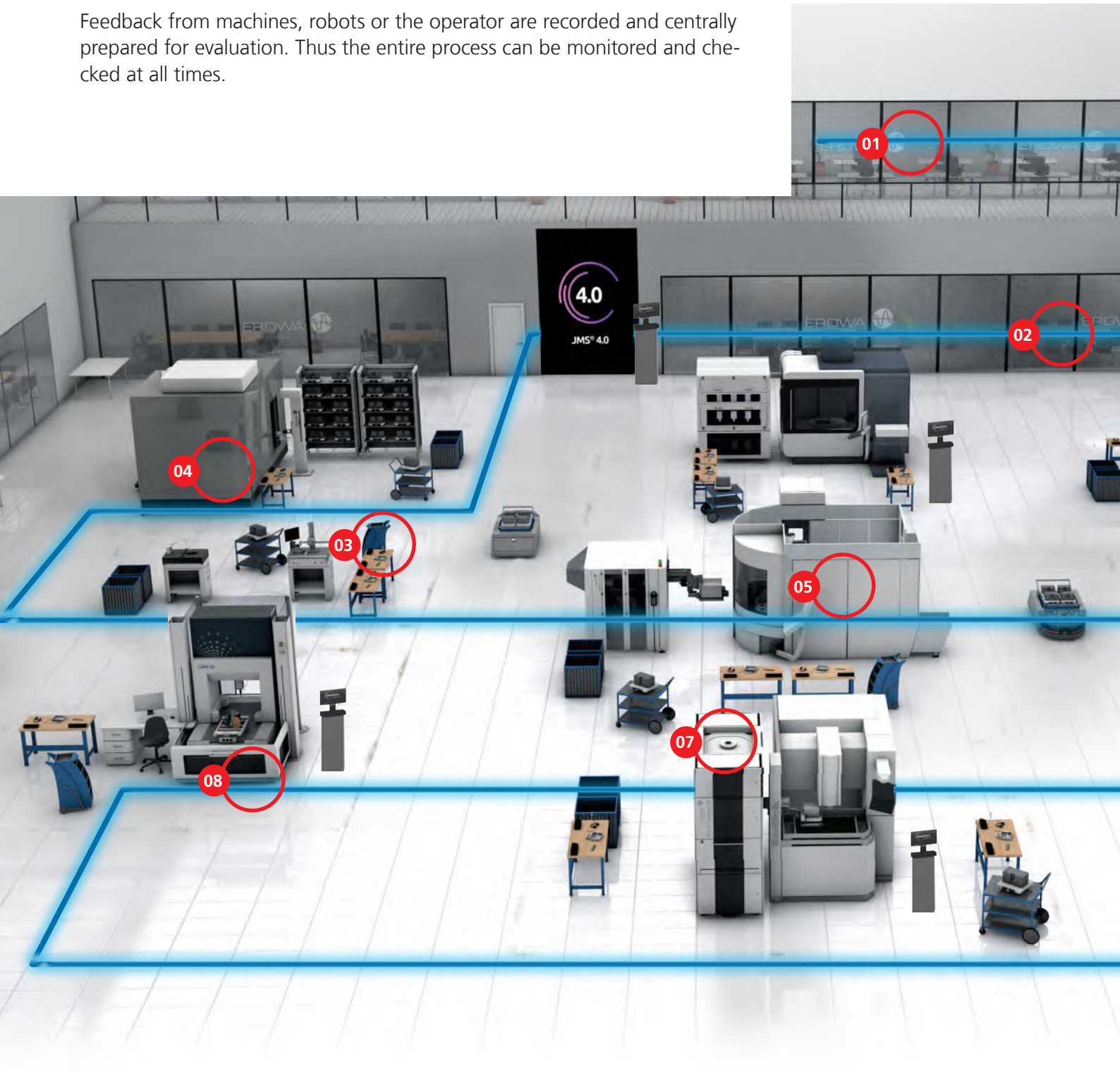

JMS® 4.0
EROWA Productivity Suite

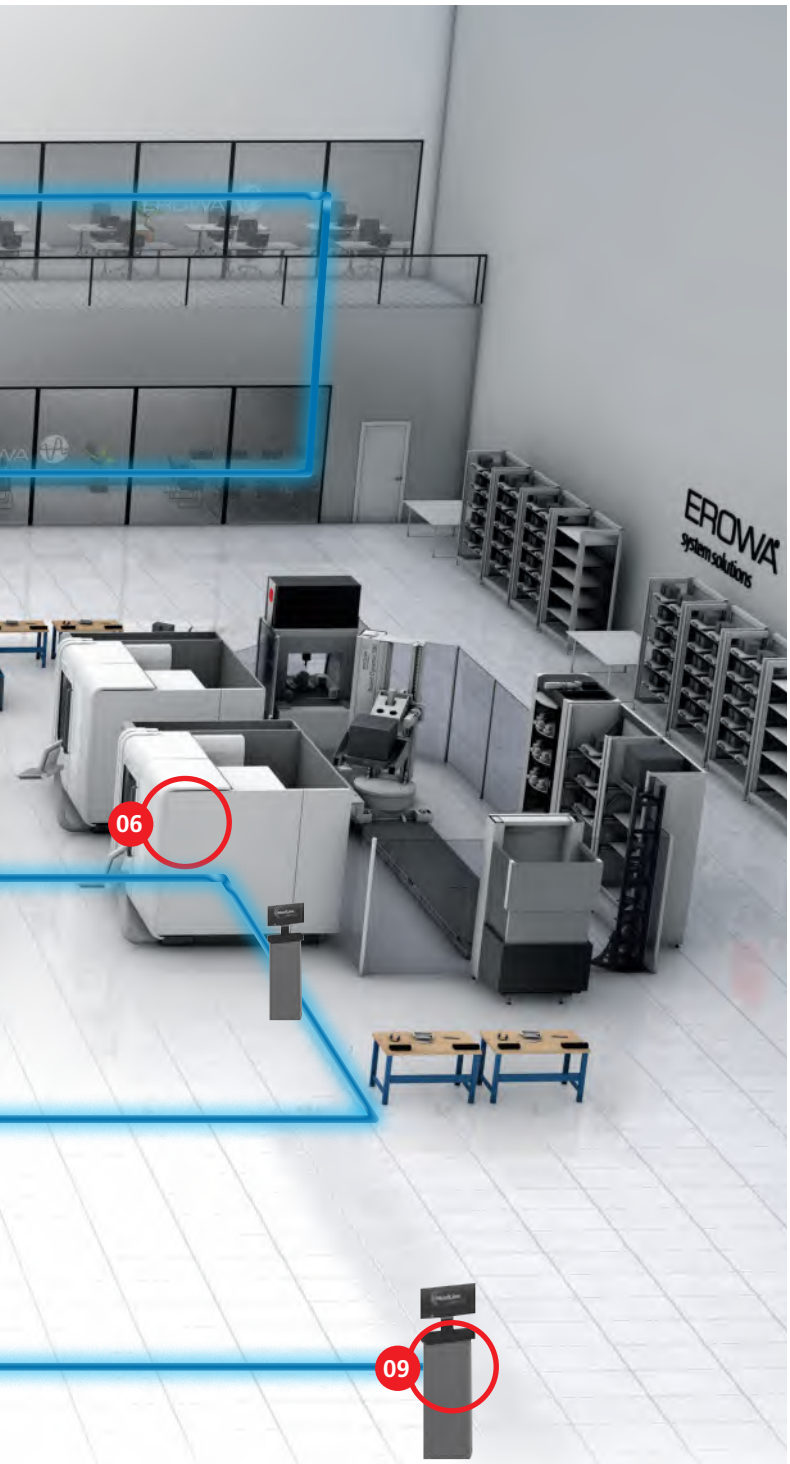

01 | Order registration with ERP

02 | CAD/CAM office

03 | Setting-up and datum point determination while the machine is in operation

04 | Milling with manual loading process

05 | Milling with automatic loading process by a monobloc robot

06 | Milling and in-process measuring with automatic loading process by a linear robot

07 | EDM with automatic loading process by a monobloc robot

08 | Quality measurement

09 | Monitoring and reporting of the system



EROWA JMS 4.0

Planning, controlling and monitoring of individual processes

The EROWA JMS 4.0 process control system links up all the data and controls the entire production process. It automates the data flow from ERP and CAD/CAM to the production cells. JMS 4.0 assumes control of the robots and data transmission and the monitoring of the linked-up machines.

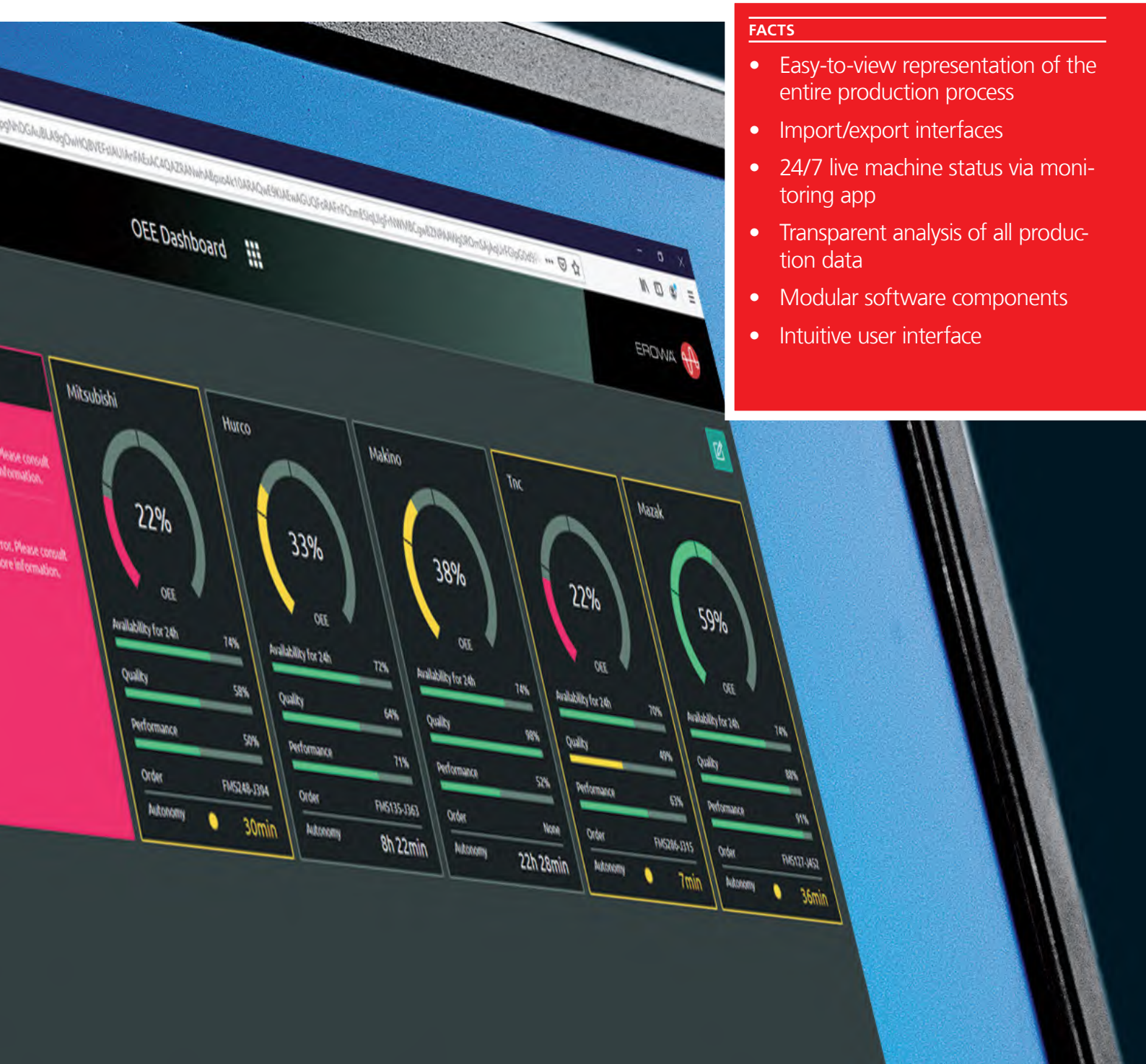

FACTS

- Easy-to-view representation of the entire production process
- Import/export interfaces
- 24/7 live machine status via monitoring app
- Transparent analysis of all production data
- Modular software components
- Intuitive user interface

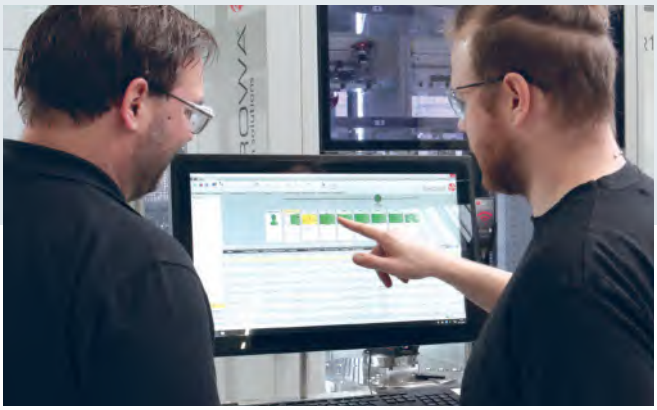

Controlled data flow I The process control system controls and monitors production cells. The complete universality of the data with all systems allows for genuinely comprehensive monitoring and process security.

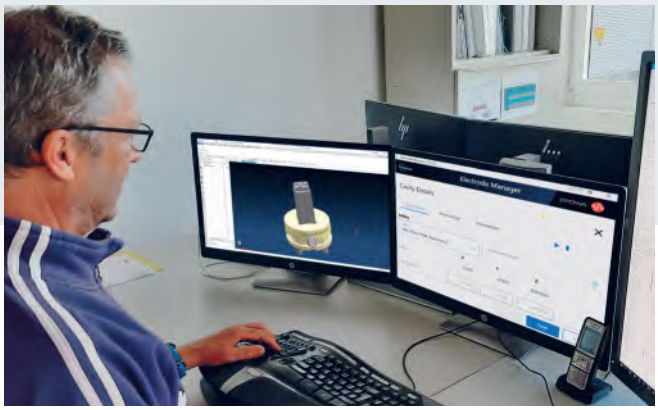

Simple import/export of data I JMS 4.0 has a wide variety of interfaces to job and production planning systems such as ERP / PPS / CAD / CAM and others. In this way, data is automatically imported and the current production status is reported back in real time.



User-friendly and easy to operate I JMS 4.0 ensures a clear overview of current jobs. All the data that is relevant to production are represented in a user-friendly fashion. Current status messages assist the operator.



Universal identification I With the RFID-based EROWA EWIS system, the pallets and electrode holders are unequivocally identified. Thus the operator is always informed about the current position and status of the workpieces and electrodes. Automatic reading of the magazine load is the precondition for a high degree of process security.



Reporting I Job or machine reports can be generated with a few clicks. A user-friendly interface and its availability in the entire network make this application an indispensable tool for process optimization.



Transparency about productivity I Dashboard and supervision applications show the efficiency parameters in real time, as well as the current status of the production cells in the system.

EROWA JMS 4.0

A suitable solution to meet any requirement

Whether for EDM or WEDM, milling, drilling, grinding or measuring: the JMS 4.0 software solutions link up machines for a wide variety of production technologies.

You determine the degree of integration yourself: with or without automation, whether one single machine is linked up or the workshop is universally integrated. The software is modular and can be expanded according to requirements.

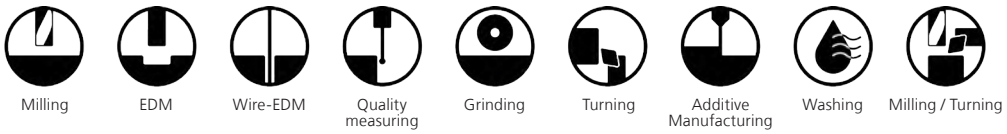



EROWA JMS 4.0

We accompany you on the way to the right choice. Our specialists will be glad to advise you and show you what your perfect solutions can look like and be implemented step by step.

YOUR ADVANTAGES

- Workflow monitoring for the production process
- Secure and efficient data exchange with CAD/CAM and ERP
- Part offset data import directly from the presetting station
- Integration of ancillary processes such as cleaning and drying
- In-process quality checks of electrode and workpieces
- Anticipatory tool monitoring



JMS® 4.0
EROWA Productivity Suite

The EROWA JMS 4.0 process control system combines all data and controls the entire production process.

more information:
Weblink - Process control system JMS 4.0

Index

This is where you will find all the EROWA order numbers in numerically ascending order, together with the numbers of the pages on which the products are presented in pictures.

Order number	Page
ER-001565	247
ER-001617	77
ER-001674	317
ER-001846	69
ER-001846	128
ER-001846	150
ER-001846	278
ER-002023	76
ER-002147	76
ER-002394	268
ER-002395	268
ER-002396	268
ER-002397	268
ER-002398	268
ER-002399	268
ER-002400	268
ER-002401	268
ER-002402	268
ER-002403	241
ER-002404	241
ER-002405	241
ER-002406	241
ER-002407	241
ER-002408	241
ER-002409	241
ER-002410	241
ER-002411	241
ER-002412	241
ER-002413	241
ER-002414	241
ER-002415	241
ER-002416	241
ER-002417	241
ER-002418	241
ER-002419	241
ER-002420	241
ER-002421	241
ER-002814	76
ER-003350	358
ER-003358	358
ER-003367	232
ER-003393	235
ER-003405	235
ER-003422	232
ER-003439	235
ER-003467	232
ER-003470	232
ER-003489	236
ER-003513	232
ER-006700	240
ER-006701	240
ER-006702	240
ER-006703	240
ER-006704	240
ER-006705	240
ER-006706	240
ER-006707	240
ER-006708	240
ER-006709	240
ER-006710	240
ER-006711	240
ER-006712	240
ER-006713	240
ER-006714	240
ER-006715	240
ER-006716	240
ER-006717	240
ER-006718	240
ER-007521	204
ER-007523	204
ER-007580	205
ER-007604	207
ER-007612	208
ER-007618	214
ER-007697	211
ER-007781	317
ER-007796	363
ER-007799	317
ER-007851	293
ER-007852	293
ER-007870	230
ER-007877	300
ER-007935	307
ER-007962	318
ER-007980	227
ER-007990	311
ER-008186	210
ER-008215	324
ER-008220	311
ER-008221	311
ER-008231	310
ER-008301	326
ER-008458	242
ER-008547	281
ER-008551	242
ER-008553	281
ER-008562	358
ER-008595	242
ER-008617	245
ER-008623	358
ER-008628	358
ER-008633	246
ER-008638	245
ER-008649	246
ER-008745	239
ER-008756	358
ER-008814	307
ER-008831	358
ER-008842	307
ER-008846	316
ER-008848	317
ER-008852	358
ER-008854	358
ER-008856	308
ER-008868	322
ER-008873	311
ER-008875	311
ER-008910	315
ER-008972	149
ER-009007	283
ER-009209	235
ER-009231	231
ER-009235	243
ER-009696	318
ER-009866	231
ER-009899	358
ER-010491	235
ER-010495	233
ER-010497	231
ER-010502	233
ER-010505	236
ER-010507	233
ER-010511	236
ER-010514	280
ER-010518	280
ER-010521	280
ER-010523	280
ER-010525	280
ER-010526	280
ER-010532	222
ER-010532	280
ER-010538	278
ER-010560	245
ER-010561	245
ER-010562	245
ER-010577	242
ER-010581	242
ER-010583	242
ER-010585	231
ER-010586	232
ER-010592	236
ER-010622	234
ER-010627	222
ER-010661	281
ER-010671	240
ER-010689	240
ER-010694	282
ER-010723	245
ER-010734	317
ER-010742	170
ER-010742	183
ER-010742	227
ER-010744	281
ER-010755	227
ER-010906	280
ER-011362	279
ER-011412	279
ER-011591	223
ER-011597	278
ER-011598	278
ER-011599	144
ER-011599	218
ER-011600	280
ER-011803	210
ER-012297	208
ER-012299	208
ER-012444	93
ER-012580	362
ER-012727	246
ER-012727	313
ER-012847	294
ER-013062	283
ER-013913	223
ER-013913	281
ER-014326	76
ER-014333	76
ER-014366	76
ER-014698	307
ER-014722	308
ER-015465	170
ER-015465	227
ER-015627	230
ER-015629	234
ER-015670	308
ER-015880	195
ER-015888	195
ER-015985	283
ER-015995	193
ER-015996	194
ER-015997	193
ER-015998	193
ER-015999	194
ER-016001	194
ER-016003	88
ER-016007	192
ER-016010	192
ER-016142	147
ER-016274	195
ER-016652	312
ER-016657	312
ER-016691	308
ER-016917	88
ER-017198	312
ER-017198	318
ER-017529	268
ER-017530	268
ER-017532	268
ER-017533	269
ER-017534	269
ER-017535	269
ER-017536	269
ER-017541	274
ER-017645	301
ER-017646	301
ER-017647	301

Order number	Page
ER-017648	301
ER-017982	271
ER-017984	271
ER-018570	88
ER-018718	93
ER-018858	276
ER-018936	316
ER-018937	303
ER-018938	302
ER-018940	302
ER-018941	305
ER-019248	302
ER-019424	212
ER-019473	274
ER-019474	274
ER-019512	270
ER-019951	274
ER-019979	274
ER-019989	320
ER-020025	262
ER-020026	262
ER-020027	263
ER-020596	299
ER-020958	272
ER-020963	266
ER-021126	301
ER-021127	301
ER-021128	301
ER-021502	318
ER-021503	318
ER-022250	144
ER-022250	223
ER-022355	282
ER-022457	281
ER-022465	316
ER-022511	264
ER-022514	264
ER-022583	293
ER-022584	293
ER-022669	313
ER-022670	313
ER-022683	362
ER-022921	273
ER-022922	273
ER-022923	273
ER-022924	273
ER-023120	95
ER-023121	95
ER-023325	193
ER-024562	93
ER-024681	195
ER-024808	281
ER-024932	93
ER-025027	306
ER-025030	306
ER-025100	306
ER-025101	306
ER-025115	306
ER-025116	306
ER-025895	304
ER-025896	304
ER-026768	314
ER-027205	306
ER-027640	300
ER-027641	300
ER-027695	314
ER-028167	264
ER-028306	306
ER-028471	300
ER-028480	300
ER-028913	314
ER-029015	271
ER-029098	271
ER-029228	305
ER-029229	305
ER-029313	214
ER-029982	266
ER-029988	267
ER-030110	302
ER-030161	270
ER-030478	125
ER-030479	124
ER-030643	298
ER-030645	298
ER-030671	315
ER-030678	297
ER-030923	297
ER-031179	302
ER-031942	297
ER-031945	304
ER-031952	310
ER-032388	125
ER-032464	247
ER-032466	275
ER-032785	230
ER-032810	234
ER-032832	212
ER-032964	124
ER-033036	130
ER-033204	243
ER-033205	243
ER-033206	243
ER-033207	243
ER-033499	77
ER-033500	43
ER-033502	42
ER-033504	77
ER-033600	64
ER-033602	64
ER-033654	243
ER-033655	243
ER-033656	243
ER-033657	243
ER-033800	65
ER-033804	74
ER-033933	298
ER-033955	297
ER-033958	310
ER-033974	298
ER-034045	268
ER-034095	76
ER-034098	77
ER-034168	69
ER-034373	77
ER-034375	77
ER-034387	211
ER-034533	316
ER-034631	304
ER-034665	212
ER-034677	214
ER-034680	336
ER-034735	213
ER-034820	69
ER-034822	69
ER-034989	301
ER-035097	225
ER-035114	225
ER-035117	225
ER-035154	272
ER-035154	282
ER-035156	282
ER-035156	314
ER-035209	224
ER-035210	224
ER-035211	224
ER-035212	225
ER-035261	263
ER-035262	263
ER-035294	74
ER-035294	94
ER-035294	130
ER-035294	282
ER-035294	314
ER-035297	225
ER-035356	213
ER-035365	148
ER-035500	43
ER-035502	42
ER-035690	294
ER-035714	292
ER-035715	292
ER-035792	337
ER-035994	298
ER-036272	267
ER-036347	94
ER-036657	219
ER-036658	219
ER-036672	76
ER-037307	301
ER-037967	71
ER-038622	72
ER-038710	299
ER-038711	299
ER-038800	65
ER-038891	303
ER-038918	148
ER-038985	294
ER-039200	65
ER-039201	65
ER-039211	296
ER-039212	296
ER-039213	296
ER-039214	296
ER-039215	296
ER-039216	296
ER-039217	296
ER-039795	299
ER-039839	338
ER-040641	292
ER-040696	335
ER-040697	334
ER-040701	337
ER-040999	64
ER-040999	170
ER-040999	183
ER-041179	315
ER-041374	214
ER-041429	338
ER-041430	294
ER-041460	66
ER-041461	66
ER-041462	67
ER-041463	67
ER-041464	66
ER-042038	70
ER-042350	339
ER-042440	338
ER-042865	126
ER-042866	126
ER-042904	295
ER-043353	283
ER-043427	339
ER-043428	339
ER-043487	295
ER-044426	69
ER-044428	69
ER-045243	130
ER-045541	127
ER-045555	296
ER-045759	338
ER-045969	71
ER-045983	129
ER-046009	126
ER-046044	213
ER-046046	213
ER-046075	338
ER-046080	362
ER-046221	151
ER-046250	419
ER-046456	129
ER-046458	129
ER-046460	129
ER-046462	130
ER-046473	126
ER-046474	126
ER-046927	336
ER-047500	335
ER-047544	334
ER-047566	335
ER-048377	89
ER-048519	210
ER-049041	70
ER-049248	338
ER-049572	239
ER-050195	144
ER-050195	218
ER-051381	227
ER-051800	305
ER-051968	272
ER-051969	272

Index

This is where you will find all the EROWA order numbers in numerically ascending order, together with the numbers of the pages on which the products are presented in pictures.

Order number	Page
ER-052091	309
ER-054710	67
ER-054922	303
ER-055158	313
ER-055294	210
ER-055369	337
ER-055370	334
ER-055535	309
ER-055755	148
ER-055763	149
ER-055774	303
ER-056879	70
ER-057204	361
ER-057205	361
ER-057206	361
ER-057208	356
ER-057209	356
ER-057210	356
ER-057211	356
ER-057212	356
ER-057213	356
ER-057214	356
ER-057471	358
ER-057943	36
ER-059016	36
ER-059439	358
ER-060391	72
ER-061558	75
ER-062465	66
ER-062788	310
ER-062789	310
ER-067169	182
ER-067563	71
ER-067650	179
ER-067925	179
ER-067926	179
ER-068025	183
ER-068026	170
ER-068026	182
ER-068157	181
ER-068158	182
ER-068381	180
ER-068382	180
ER-068585	145
ER-068586	145

Order number	Page
ER-068697	145
ER-069655	180
ER-069656	180
ER-069680	181
ER-069681	181
ER-069682	182
ER-069834	295
ER-069835	295
ER-069884	181
ER-069885	181
ER-070064	70
ER-070231	178
ER-070445	128
ER-070445	150
ER-070445	279
ER-070683	179
ER-070695	178
ER-071604	71
ER-075393	71
ER-075600	178
ER-076988	178
ER-078521	183
ER-081885	336
ER-082273	117
ER-082273	171
ER-082273	183
ER-082717	336
ER-086608	179
ER-090744	144
ER-092203	149
ER-093758	220
ER-093765	220
ER-093774	221
ER-093780	221
ER-093992	234
ER-093993	234
ER-093996	230
ER-093997	230
ER-093999	239
ER-094046	267
ER-094063	267
ER-094093	129
ER-094112	213
ER-094152	212
ER-094168	74

Order number	Page
ER-094168	130
ER-094168	151
ER-094168	272
ER-094168	282
ER-094178	93
ER-094180	218
ER-094181	218
ER-094828	94
ER-094955	212
ER-095529	358
ER-096900	53
ER-096901	53
ER-096902	52
ER-096903	52
ER-099079	116
ER-099092	116
ER-099098	116
ER-099099	116
ER-099123	116
ER-099126	117
ER-099164	116
ER-099166	115
ER-099195	115
ER-099201	117
ER-099201	171
ER-099201	195
ER-099204	114
ER-099206	114
ER-099227	114
ER-099228	114
ER-099229	114
ER-099230	114
ER-099231	114
ER-099232	114
ER-099233	114
ER-099234	114
ER-099235	114
ER-099236	114
ER-099237	114
ER-099238	114
ER-099239	114
ER-099240	114
ER-099243	115
ER-099246	115
ER-099258	113

Order number	Page
ER-099263	113
ER-099267	112
ER-099269	112
ER-099272	112
ER-099275	111
ER-099276	111
ER-099277	111
ER-099282	110
ER-099285	110
ER-099286	110
ER-099292	109
ER-099298	109
ER-099314	104
ER-099315	104
ER-099317	89
ER-099317	108
ER-099318	89
ER-099318	108
ER-099330	108
ER-099331	104
ER-099332	112
ER-099334	117
ER-099358	109
ER-099387	105
ER-099388	105
ER-099389	106
ER-099390	106
ER-099437	117
ER-100266	105
ER-103679	248
ER-103680	250
ER-103681	252
ER-104310	88
ER-104530	180
ER-105291	171
ER-107472	88
ER-107510	88
ER-108204	75
ER-113000	168
ER-114061	169
ER-114062	169
ER-115254	138
ER-115287	139
ER-115290	140
ER-115304	90

Order number	Page
ER-115305	139
ER-115308	142
ER-115355	94
ER-115379	141
ER-115388	142
ER-115521	127
ER-115521	143
ER-115523	143
ER-115628	143
ER-115644	171
ER-115657	141
ER-115660	141
ER-115699	146
ER-115699	246
ER-115712	142
ER-115721	143
ER-115722	147
ER-115749	151
ER-115800	138
ER-115844	151
ER-116634	127
ER-119717	131
ER-123194	280
ER-124304	148
ER-124305	147
ER-124370	147
ER-124371	149
ER-126696	131
ER-129069	221
ER-129070	221
ER-129071	222
ER-129072	222
ER-129663	64
ER-130125	57
ER-130126	60
ER-130127	57
ER-130128	58
ER-130129	58
ER-130130	60
ER-130131	61
ER-130132	61
ER-130133	62
ER-130134	61
ER-130135	57
ER-130136	60

Order number	Page
ER-130137	57
ER-130138	60
ER-130140	58
ER-130140	107
ER-130141	58
ER-130141	107
ER-130415	62
ER-130415	107
ER-130417	62
ER-130417	107
ER-131200	40
ER-131210	40
ER-131220	41
ER-131230	41
ER-132250	141
ER-133890	55
ER-133891	54
ER-133895	55
ER-133896	54
ER-134436	169
ER-136055	90
ER-136056	139
ER-136200	68
ER-136576	58
ER-136578	61
ER-136757	61
ER-136793	62
ER-137239	89
ER-138658	59
ER-138950	127
ER-138950	146
ER-138951	63
ER-139039	95
ER-139049	95
ER-139500	86
ER-139501	86
ER-139504	87
ER-139505	87
ER-140935	75
ER-143446	56
ER-143875	59
ER-143876	63
ER-144370	169
ER-144380	168
ER-145087	63
ER-145286	70
ER-147223	144
ER-147223	219
ER-147394	356
ER-147724	358

Order number	Page
ER-148100	44
ER-148101	44
ER-148220	45
ER-148225	45
ER-148420	47
ER-148421	46
ER-148425	47
ER-148426	46
ER-148620	48
ER-148625	48
ER-148820	49
ER-148825	49
ER-150517	62
ER-150696	70
ER-150800	211
ER-150890	158
ER-150892	158
ER-150897	159
ER-150898	159
ER-153058	144
ER-153058	219
ER-153774	72
ER-153775	72
ER-153776	73
ER-153777	73
ER-154100	211
ER-154473	205
ER-155000	20
ER-155002	22
ER-155004	24
ER-155100	206
ER-155102	206
ER-155118	206
ER-155200	209
ER-155202	209
ER-155218	209
ER-155220	161
ER-155250	207
ER-155470	160
ER-155475	160
ER-155480	160
ER-155485	160
ER-155498	161
ER-155499	161
ER-155580	168
ER-155772	158
ER-155774	159
ER-155885	207
ER-156077	63
ER-157207	56

Order number	Page
ER-157409	68
ER-157409	128
ER-157409	279
ER-157410	92
ER-157410	316
ER-157411	68
ER-157411	150
ER-157411	278
ER-157413	68
ER-157413	128
ER-158218	92
ER-158556	356
ER-158557	356
ER-158558	356
ER-158559	356
ER-158560	356
ER-158561	356
ER-158911	358
ER-159563	171
ER-160420	47
ER-160421	46
ER-162574	283
ER-162575	283
ER-162994	71
ER-163634	70
ER-165144	170
ER-165144	182
ER-165469	358
ER-166736	91
ER-167498	161
ER-167499	161
ER-169341	59
ER-169342	59
ER-171025	66
ER-171026	67
ER-171986	24
ER-173410	91
ER-173763	24
ER-174100	20
ER-175113	21
ER-175175	22
ER-175971	24
ER-176091	25
ER-176817	23
ER-178455	23
ER-178755	72
ER-178771	73
ER-178782	73
ER-178802	25
ER-179044	25

Order number	Page
ER-179046	25
ER-179729	421
ER-179963	421
ER-180400	421
ER-180780	21
ER-180781	21

The next step

Important matters require planning. And your next step is certain to be such an important matter. After all, you are setting off into a new, rational age.

We will gladly accompany you on your way with advice, in daily operating procedures, so that you will know at any time what you are letting yourself in for. The nearest EROWA agency is not far away.

Take that important step.



EROWA - Manufacturing automation at its best

EROWA AG, founded in Switzerland in 1971, is now a globally operating organization specializing in the development, production, consulting, and distribution of state-of-the-art manufacturing technology for tool and mold making, as well as for production and precision engineering. With their headquarters located in central Switzerland, EROWA ranks among the world's leading companies in clamping technology and automation. Having 13 subsidiaries and 22 representatives, EROWA offers international points of contact and worldwide customer service.



Empowering Your Production

The next step towards greater efficiency, precision and productivity starts now. With EROWA, you have a partner who will optimize your production holistically - from clamping technology to automation and process control. Our innovative solutions adapt flexibly to your requirements and grow with you - for production that is ready for tomorrow.

Get in touch with us - we will be happy to assist you.

EROWA - Contacts international

EROWA®

EROWA Group Business Network: a member of ORENDA Holding Ltd.
Subject to technical changes. Registered trademark of EROWA AG,
Copyright © EROWA AG, patents are existing or pending for a
number of products of EROWA AG.

EROWA AG 043296 en / 07.26 / V9.06